SLV-T2000AS/T2000B/T2000MN/ T2000NP/T2000NR/T2000UX/T2000VC

RMT-V194/V194A/V194B/V194C

SERVICE MANUAL

Hi8

F MECHANISM

VHS PAL

VHS PAL SECOM

Hi-Fi

H MECHANISM

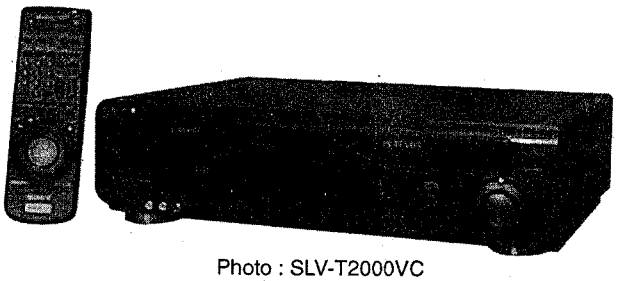

Photo : SLV-T2000VC

Australian Model
SLV-T2000AS

French Model
SLV-T2000B

E Model
SLV-T2000MN

Spanish Model
SLV-T2000NP

North European Model
SLV-T2000NR

UK Model
SLV-T2000UX

Germany Model
SLV-T2000VC

For 8mm VIDEO MECHANICAL ADJUSTMENT, Refer to the "8mm Video MECHANICAL ADJUSTMENT MANUAL Ⅴ **(F MECHANISM)" (9-973-445-11), and for VHS MECHANICAL ADJUSTMENT, refer to the "VHS MECHANICAL ADJUSTMENT MANUAL** Ⅳ **(H MECHANISM)" (9-973-623-11).**

SPECIFICATIONS

System

Channel coverage
- PAL
- UX: UHF B21 to B69
- NP, NR, VC: VHF E2-E12
  - VHF Itarian channel A-H
  - UHF E21-E69
  - CATV S1-S20
  - HYPER S21-S41
  - CATV S01-S05
- B: VHF F2-F15
  - CATV B-Q
  - HYPER S21-S41
  - UHF F21-F69

RF output signal
- UHF channels 28 to 55

Aerial out
- 75-ohm asymmetrical aerial socket

Inputs and outputs

⇨ LINE-1 (TV)
- 21-pin
- Video input: pin 20
- Audio input: pins 2 and 6
- Video output: pin 19
- Audio output: pins 1 and 3

⇦ LINE-3 IN/DECODER
- 21-pin
- Video input: pin 20
- Audio input: pins 2 and 6

LINE-2 IN
- S VIDEO, 4-pin mini DIN
- Y: 1 Vp-p, 75 ohms, unbalanced, sync negative
- C: 0.3 Vp-p, colour burst, 75 ohms, unbalanced
- VIDEO IN, phono jack (1)
- Input signal: 1 Vp-p, 75 ohms, unbalanced, sync negative
- AUDIO IN, phone jack (2)
- Input level: 327 mVrms
- Input impedance: more than 47 kilohms

LINE OUT
- S VIDEO, 4-pin mini DIN
- Y: 1 Vp-p, 75 ohms, unbalanced, sync negative
- C: 0.3 Vp-p, colour burst, 75 ohms, unbalanced
- VIDEO OUT, phono jack (1)
- Output signal: 1 Vp-p, 75 ohms, unbalanced, sync negative
- AUDIO OUT, phone jack (2)
- Standard output level: 327 mVrms
- Load impedance: 47 kilohms
- Output impedance: less than 10 kilohms

General

Power requirements
- 220 – 240 V AC, 50 Hz

Power consumption
- 37 W

Operating temperature
- 5°C to 40°C

Storage temperature
- -20°C to 60°C

Dimensions
- Approx. 430 × 109 × 387 mm (w/h/d) including projecting parts and controls

Mass
- Approx. 7.2 kg

Supplied accessories

Remote commander (1)
R6 (size AA) batteries (2)
Aerial cable (1)
Audio/video cable (1)
S-video cable (1)
Mains lead (1)
LINE IN jack cover (1)(NP,NR,UX,VC)

Design and specifications are subject to change without notice.

VIDEO CASSETTE RECORDER

MICROFILM

SONY®

SAFETY-RELATED COMPONENT WARNING!!

COMPONENTS IDENTIFIED BY MARK ⚠ OR DOTTED LINE WITH MARK ⚠ ON THE SCHEMATIC DIAGRAMS AND IN THE PARTS LIST ARE CRITICAL TO SAFE OPERATION. REPLACE THESE COMPONENTS WITH SONY PARTS WHOSE PART NUMBERS APPEAR AS SHOWN IN THIS MANUAL OR IN SUPPLEMENTS PUBLISHED BY SONY.

SAFETY CHECK-OUT

After correcting the original service problem, perform the following safety checks before releasing the set to the customer.

1. Check the area of your repair for unsoldered or poorly-soldered connections. Check the entire board surface for solder splashes and bridges.
2. Check the interboard wiring to ensure that no wires are "pinched" or contact high-wattage resistors.
3. Look for unauthorized replacement parts, particularly transistors, that were installed during a previous repair. Point them out to the customer and recommend their replacement.
4. Look for parts which, through functioning, show obvious signs of deterioration. Point them out to the customer and recommend their replacement.
5. Check the B+ voltage to see it is at the values specified.
6. Flexible Circuit Board Repairing
   - Keep the temperature of the soldering iron around 270°C during repairing.
   - Do not touch the soldering iron on the same conductor of the circuit board (within 3 times).
   - Be careful not to apply force on the conductor when soldering

TABLE OF CONTENTS

SERVICE NOTE

1. CLEANING OF VIDEO HEAD AND RUN SYSTEM 5
1-1. Method 1 5
1-2. Method 2 5
2. Video 8 DECK SECTION 5
2-1. Removal of Cassette at Failure with Cassette Inserted 5
3. VHS DECK SECTION 6
3-1. How to Return the Pinch Roller, Guide Roller and Elevator Cam to Stop Mode 6
3-2. How to Return a Tape Into Cassette Half 6
3-3. How to Remove a Cassette From a Machine If a Cassette Is Left In a Machine In Trouble 6
3-4. How to Remove Drum Assembly 6
3-5. How to Replace a Rotary Upper Drum 7
3-5-1. How to Remove a Rotary Upper Drum 7
3-5-2. How to Attach a New Rotary Upper Drum 7

1. GENERAL

Getting Started
- Unpacking 1-1
- Setting up the remote commander 1-1
- Connecting the VCR 1-2
- Tuning your TV to the VCR 1-3
- Setting up the VCR with EASY SET UP 1-3
- Manual setup — Selecting a language 1-4
- Manual setup — Presetting channels 1-4
- Manual setup — Setting up VIDEO Plus+ 1-5
- Manual setup — Changing programme positions 1-6
- Manual setup — Setting the clock 1-6

Basic Operations
- Playing a tape 1-7
- Recording TV programmes 1-7
- Recording TV programmes using VIDEO Plus+ 1-8
- Setting the timer manually 1-9

Additional Operations
- Playing/searching at various speeds 1-10
- Recording TV programmes using the quick timer 1-10
- Checking/changing/cancelling timer settings 1-11
- Recording stereo and bilingual programmes 1-11
- Searching using the index function (VHS deck only) 1-12
- Adjusting the picture (VHS deck only) 1-12
- Changing menu options 1-12
- Using the 8 mm deck and VHS deck at the same time 1-12

Editing
- One button dubbing 1-13
- Cut editing 1-13
- Audio dubbing (VHS deck only) 1-13
- Editing with another VCR 1-14

Additional Information
- Hi8 (high eight) video system 1-15
- Index to parts and controls 1-15

2. DISASSEMBLY

2-1. UPPER CASE, FRONT PANEL ASSEMBLY 2-1
2-2. FL-79, FR-113 BOARDS, ROTARY SWITCH 2-1
2-3. CP-76 BOARD 2-2
2-4. RV-50 BOARD 2-2
2-5. VHS MECHANISM DECK ASSEMBLY 2-3
2-6. MV-34 BOARD 2-4
2-7. PS-380 BOARD 2-4
2-8. MH-18 BOARD (WITH Video 8 MECHANISM DECK) 2-5
2-9. Video 8 MECHANISM DECK (WITH RP-211 BAORD) 2-5
2-10. CIRCUIT BOARDS LOCATION 2-6

3. BLOCK DIAGRAMS

3-1. OVERALL BLOCK DIAGRAM 3-1
3-2. Video 8 VIDEO BLOCK DIAGRAM 3-3
3-3. VHS VIDEO BLOCK DIAGRAM 3-5
3-4. Video 8 AUDIO BLOCK DIAGRAM 3-7
3-5. VHS AUDIO BLOCK DIAGRAM 3-9
3-6. VIDEO IN/OUT BLOCK DIAGRAM 3-11
3-7. AUDIO IN/OUT BLOCK DIAGRAM 3-13
3-8. Video 8 SERVO/SYSTEM CONTROL BLOCK DIAGRAM 3-15
3-9. VHS SERVO/SYSTEM CONTROL BLOCK DIAGRAM 3-17
3-10. MODE CONTROL BLOCK DIAGRAM 3-19
3-11. POWER SUPPLY BLOCK DIAGRAM 3-21

4. PRINTED WIRING BOARDS AND SCHEMATIC DIAGRAMS

4-1. FRAME SCHEMATIC DIAGRAM 4-1
4-2. PRINTED WIRING BOARDS AND SCHEMATIC DIAGRAMS 4-3
- RP-211 (Video 8 REC/PB AMP) PRINTED WIRING BOARD AND SCHEMATIC DIAGRAM 4-3
- MH-18 (Video 8 VIDEO, SERVO/SYSTEM CONTROL, AUDIO) PRINTED WIRING BOARD 4-6
- MH-18 (Video 8 VIDEO) SCHEMATIC DIAGRAM 4-11
- MH-18 (Video 8 SERVO/SYSTEM CONTROL) SCHEMATIC DIAGRAM 4-16
- MH-18 (Video 8 VIDEO, AUDIO) SCHEMATIC DIAGRAM 4-21
- RV-50 (VHS REC/PB AMP) PRINTED WIRING BOARD AND SCHEMATIC DIAGRAM 4-26
- RV-50 (VHS REC/PB AMP) SCHEMATIC DIAGRAM 4-31
- MV-34 (TUNER, MODE CONTROL, VHS VIDEO, SERVO/SYSTEM CONTROL, AUDIO) PRINTED WIRING BOARD 4-36
- MV-34 (PDC/VPS, VHS VIDEO, AUDIO) SCHEMATIC DIAGRAM 4-41
- MV-34 (TUNER) SCHEMATIC DIAGRAM 4-46
- MV-34 (VHS SERVO/SYSTEM CONTROL) SCHEMATIC DIAGRAM 4-49
- MV-34 (MODE CONTROL, IN/OUT SELECTOR) SCHEMATIC DIAGRAM 4-53
- CP-76 (VIDEO, AUDIO IN/OUT) PRINTED WIRING BOARD AND SCHEMATIC DIAGRAM 4-57
- FR-113 (MODE CONTROL) SCHEMATIC DIAGRAM 4-61
- FR-113 (MODE CONTROL) PRINTED WIRING BOARD 4-65
- FL-79 (FRONT VIDEO, AUDIO IN/OUT) PRINTED WIRING BOARD AND SCHEMATIC DIAGRAM 4-67
- PS-380 (POWER SUPPLY) PRINTED WIRING BOARD AND SCHEMATIC DIAGRAM 4-69
- CP-401 POWER BLOCK (SWITCHING REGULATOR SR665) PRINTED WIRING BOARD AND SCHEMATIC DIAGRAM 4-72

5. REPAIR PARTS LIST

5-1. EXPLODED VIEWS 5-1
5-1-1. FRONT PANEL ASSEMBLY AND CASE 5-1
5-1-2. CHASSIS ASSEMBLY-1 5-2
5-1-3. CHASSIS ASSEMBLY-2 5-3
5-1-4. MECHANISM DECK ASSEMBLY-1 5-4
5-1-5. MECHANISM DECK ASSEMBLY-2 5-5
5-1-6. MECHANISM DECK ASSEMBLY-3 5-6
5-1-7. MECHANISM DECK ASSEMBLY-4 5-7
5-1-8. Video 8 CASSETTE COMPARTMENT ASSEMBLY 5-8
5-1-9. Video 8 MECHANISM DECK ASSEMBLY-1 5-9
5-1-10. Video 8 MECHANISM DECK ASSEMBLY-2 5-10
5-1-11. Video 8 MECHANISM DECK ASSEMBLY-3 5-11
5-2. ELECTRICAL PARTS LIST 5-12

6. INTERFACE, IC PIN FUNCTION DESCRIPTION

6-1. Video 8 SYSTEM 6-1
6-1-1. Interface between Video 8 system control and video, audio block (MH-18 board IC002) 6-1
6-1-2. Interface between Video 8 servo control and servo block (MH-18 board IC002) 6-2
6-2. VHS SYSTEM 6-2
6-2-1. Interface between VHS system control and video block (MV-34 board IC201) 6-2
6-2-2. Interface between VHS system control and servo peripheral circuit (MV-34 board IC201) 6-3
6-2-3. Interface between system control and mechanism block (MV-34 board IC201) 6-3
6-2-4. Interface between VHS system control and system control peripheral circuit (MV-34 board IC201) 6-4
6-2-5. Interface between VHS system control and audio block (MV-34 board IC201) 6-4
6-2-6. VHS servo/system control microprocessor (MV-34 board IC201) 6-5
6-2-7. VHS mode control microprocessor (MV-34 board IC801) 6-6
6-2-8. Mode control microprocessor (FR-113 board IC001) 6-7

7. ADJUSTMENTS

SERVICE MODE 7-1
1. SETTING THE SERVICE MODE 7-1
(1) Service LANC memory map 7-1
(2) Adjustment remote commander connecting procedure 7-2
2. TEST MODE SETTING 7-3
(1) Servo/System Control Micom 7-3
3. EMERGENCY CODES 7-3
4. D PAGE MEMORY MAP 7-4
7-1. MECHANICAL ADJUSTMENTS 7-5
1-1. VHS MECHANICAL ADJUSTMENTS 7-5
1-2. Video 8 MECHANICAL ADJUSTMENTS 7-5
1-2-1. TAPE PATH ADJUSTMENT (TRACK SHIFT) 7-5
1. Setting the Track Shift Mode 7-5
2. Preparation before Adjustment 7-5
7-2. ELECTRICAL ADJUSTMENT 7-6
2-1. PREPARATION BEFORE ADJUSTMENT 7-6
2-1-1. Equipment Required 7-6
2-1-2. Equipment Connection 7-7
2-1-3. Input Signal Check 7-8
1) S VIDEO Input 7-8
2) VIDEO Input 7-8
2-1-4. VHS Alignment Tape 7-8
2-1-5. Video 8 Alignment Tape 7-9
2-1-6. Input/Output Levels and Impedance 7-10
2-1-7. Recording Mode (Normal/Hi8) Select 7-10
2-1-8. Adjustment Sequence 7-10
2-2. POWER SUPPLY CHECK 7-10
2-2-1. Output Voltage Check (PS-380 Board) 7-10
2-3. SYSTEM CONTROL/TIMER ADJUSTMENT 7-11
1. EEPROM Data Initial Value Writing 7-11
2. Timer Clock Adjustment (MV-34 Board) 7-11
2-4. Video 8 SERVO SYSTEM ADJUSTMENT 7-12
1. Switching Position Adjustment (MH-18 Board) 7-12
2. Capstan Duty Automatic Adjustment 7-12
3. Reverse Direction SLOW Adjustment 7-13
4. Double Speed Playback Adjustment 7-13
2-5. Video 8 VIDEO SYSTEM ADJUSTMENT 7-14
2-5-1. Video 8 Video System Adjustment 7-14
1. Playback Frequency Response Adjustment (RP-211, MH-18 Boards) 7-14
2. Sync AGC Adjustment (MH-18 Board) 7-15
3. Chroma Comb Filter Adjustment (MH-18 Board) 7-15
4. Pre-emphasis Input Level Adjustment (MH-18 Board) 7-16
5. Hi8 Mode De-emphasis Level Adjustment (MH-18 Board) 7-16
6. Playback Level Adjustment (MH-18 Board) 7-16
7. Normal 8 Mode De-emphasis Level Adjustment (MH-18 Board) 7-16
8. Normal 8 Mode Y FM Carrier Frequency, Y FM Deviation Adjustment 7-17
(1) Normal 8 Mode Y FM Carrier Frequency Adjustment (MH-18 Board) 4-17
(2) Normal 8 Mode Y FM Deviation Adjustment (MH-18 Board) 7-17
9. Hi8 Mode Y FM Carrier Frequency, Y FM Deviation Adjustment 7-17
(1) E Mode Y FM Carrier Frequency Adjustment (MH-18 Board) 7-18
(2) Hi8 Mode Y FM Deviation Adjustment (MH-18 Board) 7-18
10. Chroma Emphasis Adjustment (MH-18 Board) 7-19
11. Recording Y FM Level Adjustment (MH-18 Board) ... 7-19
12. Recording Chroma Level Adjustment (MH-18 Board) 7-19
2-6. Video 8 AUDIO SYSTEM ADJUSTMENT 7-20
2-6-1. Video 8 Audio System Adjustment 7-21
1. 1.5 MHz Carrier Frequency and Level Check (MH-18 Board) 7-21
2. 1.5 MHz Deviation Adjustment (MH-18 Board) 7-21
3. 1.7 MHz Deviation Adjustment (MH-18 Board) 7-22
4. Band-pass Filter Adjustment (MH-18 Board) 7-22
5. E-E Output Level Check (MH-18 Board) 7-22
6. Overall Frequency Characteristic Check 7-23
7. Overall Distortion Factor, Level Check 7-23
8. Overall Noise Level Check 7-24
9. Separation Check 7-24
2-7. SERVO SYSTEM CHECK 7-24
1. RF Switching Position Adjustment (MV-34, RV-50 Boards) 7-24
2-8. VHS VIDEO SYSTEM CHECKS 7-25
1. X'tal OSC Check (RV-50 Board) 7-25
2. SYNC AGC Check (RV-50 Board) 7-25
3. White Clip/Dark Clip Check (RV-50 Board) 7-25
4. Recording Y Level Check (RV-50 Board) 7-26
5. Recording Chroma Level Check (RV-50 Board) 7-26
6. Playback Level Check (RV-50 Board) 7-26
2-9. VHS AUDIO SYSTEM ADJUSTMENT 7-26
2-9-1. HiFi Audio System Adjustment 7-26
1. VCO F0 Adjustment (MV-34 Board) 7-27
2. Band Pass Filter f0 Adjustment (MV-34 Board) 7-27
3. AF Switching Position Adjustment (MV-34, RV-50 Boards) 7-27
2-9-2. Normal Audio System Adjustment 7-28
1. ACE Head Adjustment 7-28
2. E-E Output Level Check 7-28
3. Overall Output Level and Distortion Factor Check 7-28
4. Overall Noise Level Check 7-28
2-10. ADJUSTING PARTS LOCATION 7-30

1. CLEANING OF VIDEO HEAD AND RUN SYSTEM

1-1. Method 1

[Cleaning Method with Cleaning Tape]

- A cleaning cassette should be used.
  Video 8 : V8-25CLH
  VHS : T-25CL
  (When using, the attached manual for the cleaning cassette should be thoroughly read.)

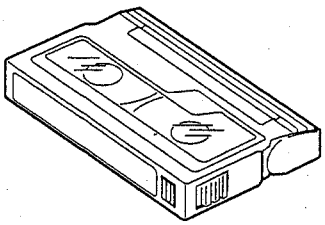

Fig. 1

1-2. Method 2

[Cleaning Method with Cleaning Liquid]

① Remove the upper case of the video deck.
② Apply cleaning liquid to a head cleaner stick.
③ As shown in the figure, press the head cleaner stick lightly. Turn the rubber of the rotary upper drum gradually and clean the video deck.

[Cleaning Method with Run System]

① Apply cleaning liquid to a head cleaner stick.
② Clean the guides which tape touches directly and the pinch roller with the head cleaner.

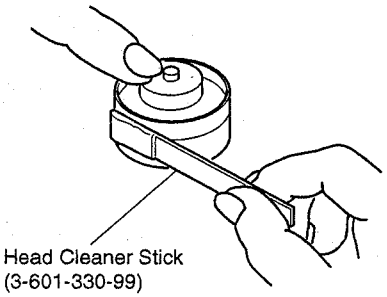

Fig. 2

2. Video 8 DECK SECTION

2-1. Removal of Cassette at Failure with Cassette Inserted

1) If tape is wounded on the drum and it cannot be removed: Rotate the capstan motor wheel in either direction and rotate the S or R reel to house the tape. Then, perform Procedure Ⓑ.
2) If tape is housed in the cassette half and cannot be removed:
   ① Remove the MD block. (For removal, refer to Section 2-7.)
   ② Rotate the drive arms at both sides of L frame and cassette compartment in the arrow direction Ⓐ.
   ③ Rotate the connecting gear in the arrow direction Ⓑ with both the thumbs.

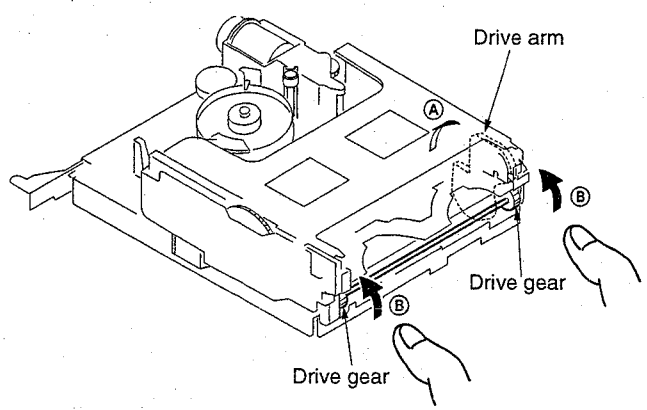

Fig. 3

3. VHS DECK SECTION

3-1. How to Return the Pinch Roller, Guide Roller and Elevator Cam to Stop Mode

1) Remove the VHS MD assembly from the machine. (Refer to the item 2-9. Removal.)
2) Rotate the worm gear-1 of the cam motor beneath the MD assembly in the direction arrow Ⓐ using a screw driver tip.

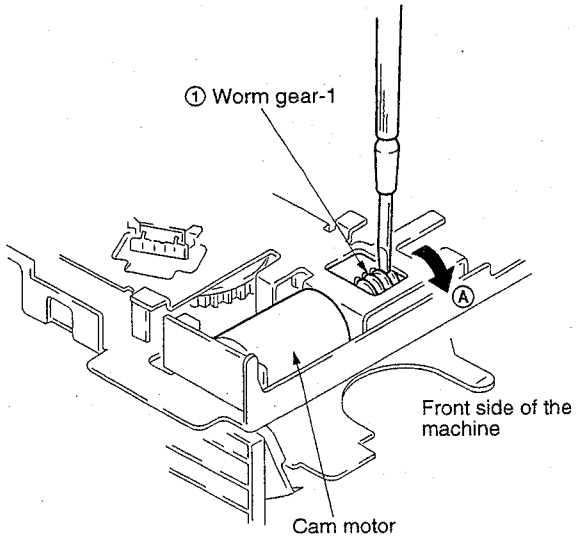

Fig. 4

3-2. How to Return a Tape Into Cassette Half

A tape can be rewound into a cassette half by rotating the flywheel-1 of the capstan motor in the direction of Ⓐ with hand.

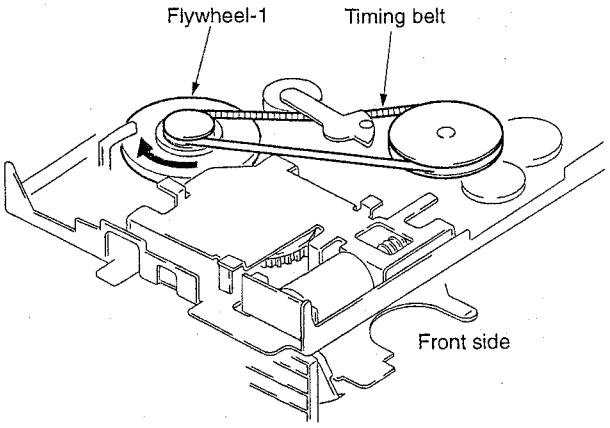

Fig. 5

3-3. How to Remove a Cassette From a Machine If a Cassette Is Left In a Machine In Trouble

Execute the item 3-2, and keep rotating the flywheel-1.

> When executing section 3-1 to 3-3, take care that a tape slack should not be caught by a mechanism or a tape should not be damaged.

3-4. How to Remove Drum Assembly

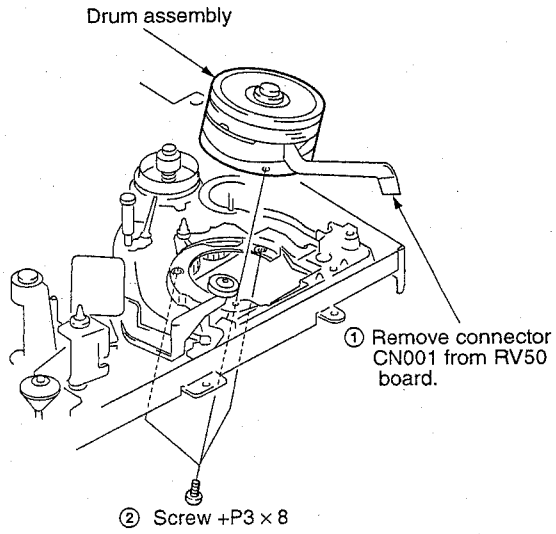

Fig. 6

3-5. How to Replace a Rotary Upper Drum

3-5-1. How to Remove a Rotary Upper Drum

1) Remove screw ① (+P3×8) and remove the ground shaft assembly ②. (Refer to Fig. 7)
2) Remove soldering which is marked by arrow and remove the rotary upper drum board completely.
3) Remove two screws ③ (PSW3×8) and remove the rotary upper drum in the direction of Ⓐ. (Refer to Fig. 8)
   If removal is difficult, remove it while rotating it slowly.

Note: If removal is difficult, check again if soldering is removed completely.

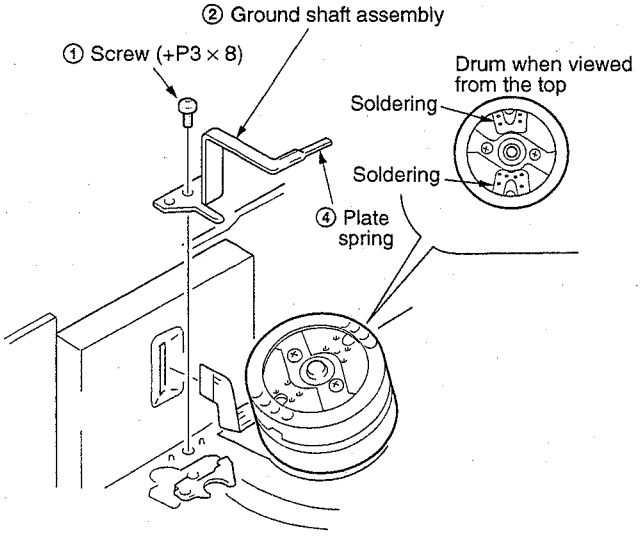

Fig. 7

3-5-2. How to Attach a New Rotary Upper Drum

1) Pay attention so that finger print or like must not be put when inserting a new upper drum into lower drum.
2) Align ➡ mark of the rotary upper drum board with the ⇒ mark of the rotary transformer board so that the screw hole on the upper drum and that on the lower drum are aligned. (Refer to Fig. 8)
3) If attaching is difficult, attach a upper drum while rotating it slowly.

Note: Pay attention not to damage the video heads.
Confirm that the upper drum is inserted completely.

4) Tighten the two screws ③ (PSW3×8). (Refer to Fig. 8)
5) Fix the earth shaft ② by tightening the screw ① (+P3×8) so that protrusion at the tip of the earth shaft contacts the center of the drum shaft.

Note: When attaching the ground shaft assembly ②, never give force to the plate spring ④.

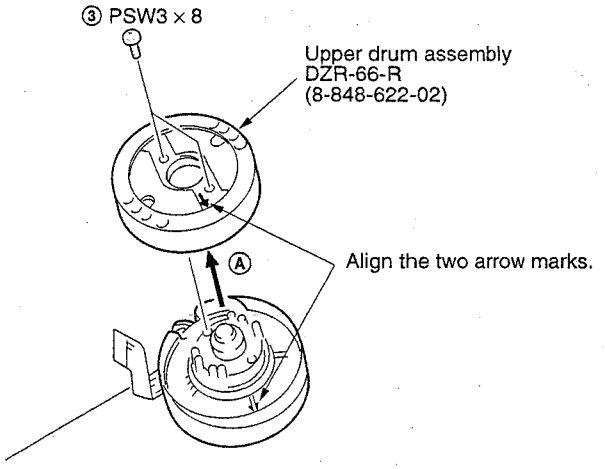

Fig. 8

SECTION 1
GENERAL

This section is extracted from the SLV-T2000UX instruction manual.

Step 1
Unpacking

Check that you have received the following items with the VCR:

- Remote commander

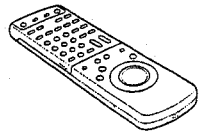

- R6 (size AA) batteries

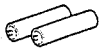

- Aerial cable

- Audio / video cable

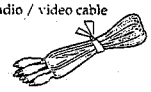

- S-video cable

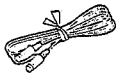

- Mains lead

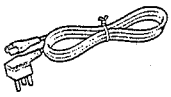

- LINE IN jack cover

Step 2
Setting up the remote commander

Inserting the batteries

Insert two R6 (size AA) batteries by matching the + and – on the batteries to the diagram inside the battery compartment.

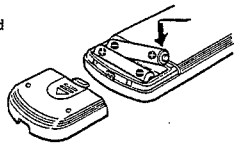

Using the remote commander

You can use this remote commander to operate this VCR and a Sony TV. Buttons on the remote commander marked with a dot (•) can be used to operate your Sony TV.

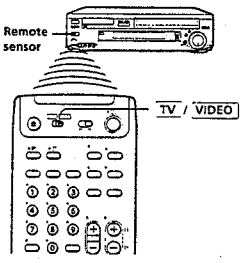

To operate	Set TV / VIDEO to
the VCR	VIDEO and point at the remote sensor on the VCR
a Sony TV	TV and point at the remote sensor on the TV

continued

Step 2 : Setting up the remote commander (continued)

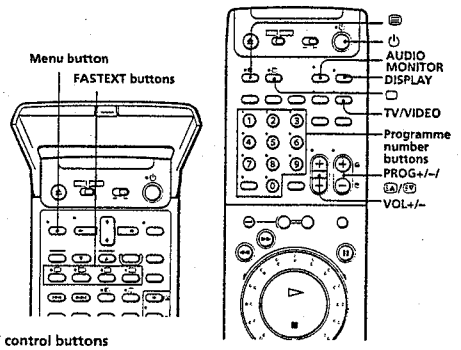

TV control buttons

To	Press
Turn the TV into standby or active mode	⏻ (on/standby)
Select an input source of the TV either from aerial in or from line in	TV/VIDEO
Select the programme position of the TV	Programme number buttons PROG +/–
Adjust the volume of the TV	VOL +/–
Switch to TV (Teletext off)	▭ (TV)
Switch to Teletext	▤ (Teletext)
Select the sound	AUDIO MONITOR
Use FASTEXT	FASTEXT buttons
Call up on-screen display	DISPLAY
Change the Teletext page	▤A/▤B
Operate TV menu options	Menu button

Notes

- With normal use, the batteries should last about three to six months.
- If you do not use the remote commander for an extended period of time, remove the batteries to avoid possible damage from battery leakage.
- Do not use a new battery with an old one.
- Do not use different types of batteries.

Setting the COMMAND MODE switch

To remotely control the Sony VCR with this remote commander, set COMMAND MODE on the remote commander to the same position as that on the VCR. Usually set to VTR 3. Change the position as shown below to control other Sony VCRs:

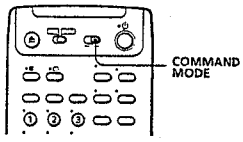

VTR 1: For Sony Betamax format VCRs
VTR 2: For Sony 8mm format VCRs
VTR 3: For Sony VHS format VCRs

Controlling other TVs with the remote commander

The remote commander is preprogrammed to control non-Sony TVs. If your TV is listed in the table on the next page, set the appropriate manufacturer's code number.

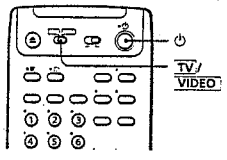

1 Set TV/VIDEO at the top of the remote commander to TV.
2 Hold down ⏻, and enter your TV's code number(s) using the number buttons. Then release ⏻.

Now you can use the following TV control buttons to control your TV: ⏻ (on/standby), TV/VIDEO, programme number buttons, PROG +/–, VOL +/–, ▭ (TV), ▤ (Teletext), FASTEXT buttons and WIDE with some TVs.

continued

Step 2 : Setting up the remote commander (continued)

Code numbers of controllable TVs

If more than one code number is listed, try entering them one at a time until you find the one that works with your TV.

To make wide mode settings, see the footnotes below this table for the applicable code numbers.

Manufacturer	Code number
Sony	01*1, 02, 03, 04, 05
Aiwa	32
Akai	68
Blaupunkt	10, 21
Brionvega	40
C.G.M	09
Colonad	03
Dual	44
Emerson	03, 04
Fenner	30, 31
Ferguson	52
Gold Star	03, 04, 17
Grundig	10*1, 11*1
Hitachi	24
Hyper	31
Inno-Hit	41
Irradio	20
ITT	15, 16, 69*3
JVC	33*1
Loewe	45
Mitsubishi	27*1, 28*1, 50*1, 51*1
Mivar	09
NEC	66
Nokia	15, 16, 69*3
Nordmende	35, 42
Orion	47, 48
Panasonic	17*1, 49
Philips	06*1, 07*1, 08*1
Phonola	18, 19
Pioneer	26
Saba	12, 13
Samsung	22, 23
Sanyo	25
Schneider	46
Seleco	14
Sharp	29
Siemens	39
Sinudyne	37
TEAC	67
Telefunken	36
Thomson	43*2
Toshiba	38
White Westinghouse	34

*1 Press WIDE to switch the wide picture mode on or off.
*2 Press WIDE, then press VOL +/– to select the wide picture mode you want.
*3 Press WIDE. The menu appears on the TV screen. Then, press CURSOR ↑/↓/←/→ to select the wide picture you want and press EXECUTE.

Notes

- If the TV uses a different remote control system from the one programmed to work with the VCR, you cannot control your TV with the remote commander.
- If you enter a new code number, the code number previously entered will be erased.
- When you replace the batteries of the remote commander, the code number automatically resets to 01 (Sony). Reset the appropriate code number.

Step 3

Connecting the VCR

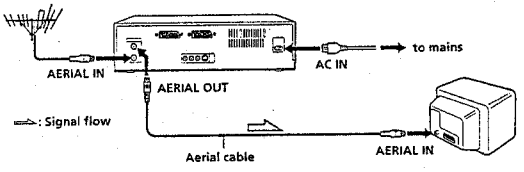

1 Disconnect the aerial cable from your TV and connect it to AERIAL IN on the rear panel of the VCR.

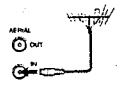

2 Connect AERIAL OUT of the VCR and the aerial input of your TV using the supplied aerial cable.

3 Connect AC IN of the VCR to the mains using the supplied mains lead.

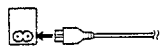

continued

Step 3 : Connecting the VCR (continued)

Additional connections

To a TV that has a EURO-AV (Scart) connector

This additional connection improves picture and sound quality. Connect the TV as shown on the right. Whenever you want to watch the VCR picture, press TV/VIDEO on the remote commander (or TV/VTR on the VCR) to display the VTR indicator in the display window. When you connect using the EURO-AV cable, set the RF MODULATOR option in the SET UP MENU to OFF. (page 50)

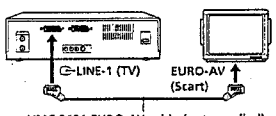

Notes

- If your TV has a EURO-AV connector, set the LINE 1 VIDEO OUT menu option to NORM. This hookup allows you to display subtitles, but the VCR does not transmit Y/C signals.
- If your TV has a EURO-AV connector and is S-VIDEO compatible, set the LINE 1 VIDEO OUT menu option to S. This hookup does not allow you to display subtitles, and some TVs may only display a black-and-white screen. If this is the case, set the TV to S-VIDEO input.

To a TV that has an audio/video connector

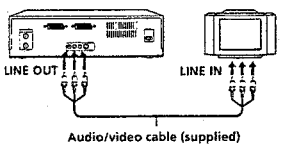

To a TV that has an S-VIDEO connector

The S-VIDEO connection in addition to the audio / video connection can improve picture quality.

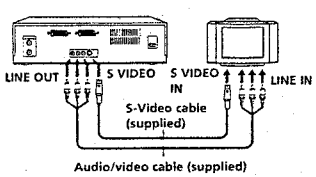

Note

If your TV has an S-VIDEO / VIDEO selector switch, set this to the S-VIDEO position to view the picture from the S-VIDEO connector.

To a stereo system

You can improve sound quality by connecting a stereo system as shown on the right.

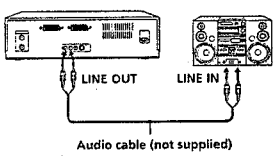

Step 4

Tuning your TV to the VCR

If you have connected your VCR to the TV using the EURO-AV cable, skip this step.

Make sure to match the COMMAND MODE of the VCR and the remote commander. This VCR and remote commander are set to VTR3 at the factory.

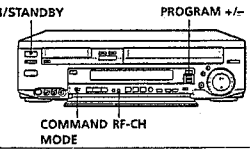

1 ON/STANDBY

Press ON/STANDBY to turn on the VCR.

2 RF-CH

Press RF-CH on the VCR.

The factory-preset RF channel appears in the display window.

The VCR signal is output through this channel to the TV.

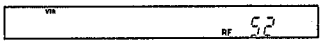

3

Turn on your TV and select a programme position for the VCR picture.

This channel will now be referred to as the video channel.

4

Tune the TV to the same channel as that shown in the display window so that the picture on the right appears on the TV screen.

Refer to your TV manual for tuning instructions.

If the picture does not appear clearly, see "To obtain a clear picture from the VCR" on the next page.

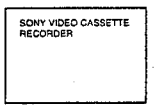

5 RF-CH

Press RF-CH.

You have now tuned your TV to the VCR. From now on, whenever you want to play a tape, set the TV to the video channel.

To check to see if the TV tuning is correct

Set the TV to the video channel and press PROGRAM +/– on the VCR. If the TV screen changes to a different programme each time you press PROGRAM +/–, the TV tuning is correct.

To obtain a clear picture from the VCR

If the picture does not appear clearly in step 4 above, press PROGRAM +/– in step 4, so that another RF channel appears. Then tune the TV to the new RF channel until a clear picture appears.

Step 5

Setting up the VCR with EASY SET UP

Before using the VCR for the first time, set up the VCR using the EASY SET UP function. With this function, you can set the language for the on-screen display, TV channels, guide channels for VIDEO Plus+, and the VCR clock, guided by the sequence indicated on the TV screen.

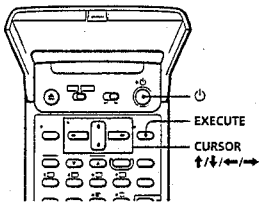

EASY SET UP

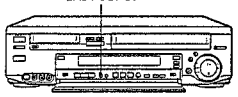

1 ⏻

Press ⏻ to turn on the VCR.

2

Turn on your TV and set it to the video channel.

3 EASY SET UP

Press EASY SET UP on the VCR.

To cancel the EASY SET UP function, press EASY SET UP again.

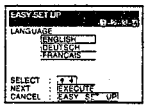

4 •CURSOR •EXECUTE

Press CURSOR ↑/↓ to highlight the desired language, then press EXECUTE.

ATP starts searching for all the receivable channels and sorts the located channels.

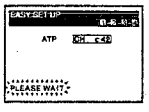

When all the channels are preset, the following screen appears.

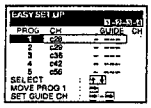

5 •CURSOR

Using CURSOR ↑/↓/←/→, set VIDEO Plus+ guide channels and change the programme positions. (If not necessary, skip this step.)

The setting procedures are the same as those described in "Manual setup — Setting up VIDEO Plus+" on page 21 and "Manual setup — Changing programme positions" on page 25.

6 •EXECUTE

Press EXECUTE.

The following screen appears.

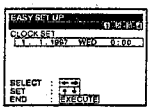

•CURSOR

❶ Press CURSOR ↑/↓ to set the day. The day of the week is set automatically.

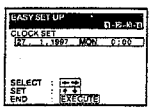

❷ Press CURSOR ➡ to highlight the month and set the month using CURSOR ↑/↓.

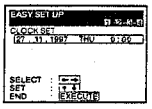

❸ Set the year, hour and minutes in sequence, using CURSOR ➡ to highlight the item to be set, and CURSOR ↑/↓ to select the digits.

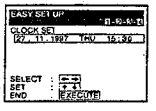

continued

Step 5 : Setting up the VCR with EASY SET UP (continued)

7 •EXECUTE

Press EXECUTE.

A programme position appears on the TV screen.

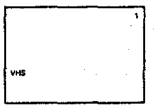

Note

- Do not exit EASY SET UP while the VCR is presetting channels. If you do, repeat EASY SET UP from the beginning.

Manual setup — Selecting a language

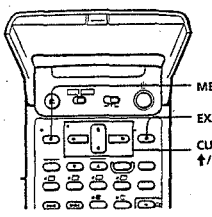

You can change the on-screen display language from the one you selected with EASY SET UP.

Before you start...

- Turn on the VCR and the TV.
- Set the TV to the video channel.

1 •MENU, •CURSOR, •EXECUTE

Press MENU, then press CURSOR ↑/↓ to move the cursor (❙) to LANGUAGE and press EXECUTE.

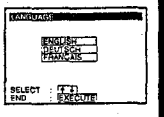

2 •CURSOR, •EXECUTE

Press CURSOR ↑/↓ to highlight the desired language, then press EXECUTE.

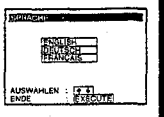

Manual setup — Presetting channels

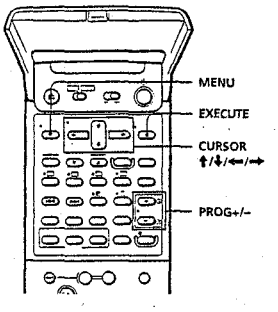

If some channels could not be preset using EASY SET UP, you can preset them manually.

Before you start...

- Turn on the VCR and the TV.
- Set the TV to the video channel.

1 •MENU, •CURSOR, •EXECUTE

Press MENU, then press CURSOR ↑/↓ to move the cursor (❙) to TUNER PRESET and press EXECUTE.

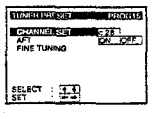

2 •CURSOR

Press CURSOR ↑/↓ to move the cursor (❙) to CHANNEL SET.

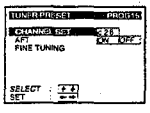

3 •PROG

Press PROG +/– to select the programme position.

Selected programme position

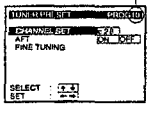

4 •CURSOR

Press CURSOR → to start tuning.

The VCR starts searching for a channel and displays the first one it finds on the TV screen. Press CURSOR ←/→ repeatedly until the channel you want is displayed.

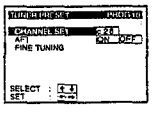

The channels are scanned from UHF B21 to B69.

If you know the number of the channel you want, press the programme number buttons. For example, for channel 43, first press "4" and then press "3."

5

To allocate another channel to another programme position, repeat steps 3 and 4.

6 •EXECUTE

Press EXECUTE.

continued

Disabling unwanted programme positions

After tuning the TV channels, you can disable unused programme positions. The disabled positions will be skipped later when you press the PROG +/– buttons.

1 In step 4 on the previous page, press programme number button "0" twice to display the number "0" beside CHANNEL SET.

2 Press EXECUTE.

If the picture is not clear

Normally, the Auto Fine Tuning (AFT) function automatically tunes in channels clearly. If, however, the picture is not clear, you may also use the manual tuning function.

1 Press PROG +/– to select the programme number for which you cannot obtain a clear picture.

2 Press MENU, then select TUNER PRESET and press EXECUTE.

3 Select FINE TUNING. The fine tuning meter appears.

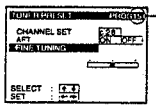

Selected programme position

4 Press CURSOR ←/→ to get a clearer picture, then press EXECUTE.

Note that the AFT (Auto Fine Tuning) setting switches to OFF.

Note

- The menu disappears automatically if you don't proceed for more than a few minutes.

Manual setup — Setting up VIDEO Plus+

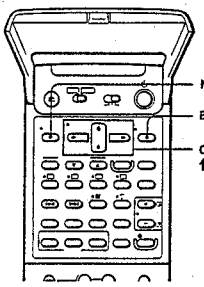

VIDEO Plus+ is a feature in Sony VCRs that simplifies programming the VCR to make timer recordings. To use VIDEO Plus+, each programme position needs to be matched with its VIDEO Plus+ guide channel. If the guide channels were not preset in the EASY SET UP procedure, you need to set them manually. To get the guide channel numbers, see "Guide channels for VIDEO Plus+" on page 23, or look in the programme guide for your area that features PlusCode.

- If you want to record satellite broadcasts using VIDEO Plus+, see page 24.

Before you start...

- Turn on the VCR and the TV.
- Set the TV to the video channel.

1 •MENU •CURSOR •EXECUTE

Press MENU, then press CURSOR ↑/↓ to move the cursor (l) to SET UP CH & VIDEO Plus+ and press EXECUTE.

When using the EASY SET UP procedure, skip this step.

The preset channels are displayed on the screen. The guide channels also appear if the VCR detected them in EASY SET UP. "—" in the GUIDE CH column means that the guide channel has not been preset.

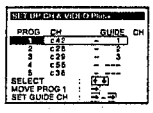

continued

2 •CURSOR

Press CURSOR ↑/↓ to move the cursor (l) to the row on which you want to set the guide channel.

To display other pages for programme positions 6 to 60, press CURSOR ↑/↓ repeatedly.

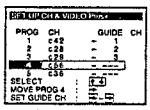

3 •CURSOR

Press CURSOR → twice to highlight the guide channel column.

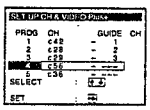

4 •CURSOR

Press CURSOR ↑/↓ to select the guide channel number assigned in the programme guide.

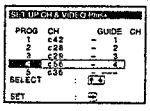

5 •CURSOR

Press CURSOR → to confirm the setting.

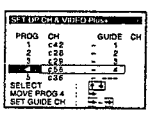

6 To set the guide channel of another station, repeat steps 2 to 5.

If you want to change the programme positions of the stations, proceed to step 2 of "Manual setup — Changing programme positions" on page 25.

7 •EXECUTE

Press EXECUTE.

Guide channels for VIDEO Plus+

Guide channel	Station name
001	BBC1
002	BBC2
003	ITV
004	CHANNEL 4
005	CH5
006	RTE (IRELAND)
007	NETWORK 2 (IRELAND)
101	SKY ONE
102	SKY NEWS
103	SKY MOVIES
104	THE MOVIE CHANNEL
105	SKY SPORT
106	NICKELODEON /PARAMOUNT CHANNEL
107	EUROSPORT/QUANTUM TV
108	WARNER BROTHERS
109	MTV EUROPE
110	CHILDREN'S CHANNEL THE FAMILY CHANNEL
111	THE DISNEY CHANNEL
112	BBC WORLD SERVICE
113	RTL 4
114	FILMNET 2, SUPER SPORT, ADULT CHAN
115	RTL PLUS INTERNATIONAL
116	SAT 1
117	PREMIERE
118	3 SAT
119	SKY2, FOX KIDS
120	PRO 7
121	TELE 5
122	TELECLUB
123	UK GOLD
124	DISCOVERY THE LEARNING CHANNEL REGAL SHOP
125	BRAVO ADULT CHANNEL EUROPEAN BUSINESS NEWS PLAYBOY
126	CNN
127	EURONEWS
128	PERFORMANCE THE ARTS CHANNEL
129	SKY MOVIES GOLD, WEATHER
130	UK LIVING TV-X
131	GRANADA +
132	GRANADA TALK, SKY SCOTTISH
133	TV5 EUROPE
134	TVE INTERNATIONAL
135	MBC/ARABIC
136	VTM
137	SPORTNET
138	COUNTRY MUSIC TV
140	SKY SPORT 2 & SOAPS & TRAVEL THE HISTORY CHANNEL SCI-FI CHANNEL SKY SPORT GOLD
141	TV ASIA
142	GRANADA GOOD LIFE GRANADA TV HIGH STREET GRANADA FOOD + WINE GRANADA HEALTH AND BEAUTY GRANADA HOME + GARDEN
143	LIVE TV
144	SUPERCHANNEL
145	VIDEO HITS ONE, VH-1
146	SELECT TV
147	FILMNET 1
148	SKY SPORT 3
149	TNT CARTOON NETWORK

Note

- The guide channel codes listed above are as of 1 February 1997. If you have any questions about the guide channels, please consult your nearest Sony service facility or the marketing group of Sony UK.

continued

Setting up VIDEO Plus+ for satellite broadcasts

When your satellite tuner is connected via the AERIAL IN connector, first you have to set the programme position for each satellite channel using the TUNER PRESET menu. Then set the guide channel number for each satellite channel using the SET UP CH & VIDEO Plus+ menu.

If your satellite tuner is connected via the LINE-3 IN connector, you don't have to set programme positions nor guide channel numbers for satellite channels. Skip the following operations.

1 Turn on the satellite tuner.

2 Press MENU, then select TUNER PRESET and press EXECUTE.

3 Press PROG +/– to select a programme position you want to use for watching a satellite channel.

4 Select CHANNEL SET, then press CURSOR ➡ to tune the VCR to the satellite tuner.

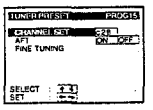

The channel number displayed beside CHANNEL SET is used for receiving all *satellite broadcasts from the satellite tuner.*

5 Press PROG +/– to select another programme position for another satellite channel, and press the programme number buttons to enter the same channel number as the one displayed in step 4.

Repeat this step for all satellite channels.

6 Set the guide channel number for each programme position assigned to the satellite channel, following the procedures in "Manual setup — Setting up *VIDEO Plus+" on page 21.*

Notes

- The menu disappears automatically if you don't proceed for more than a few minutes.
- If you use a satellite tuner connected via the LINE-3 IN connector, you don't have to set up VIDEO Plus+. Just record a satellite programme using VIDEO Plus+, and the VCR automatically records the programme from the LINE-3 IN connector.
- If you inadvertently entered a guide channel number, press CURSOR ↑/↓ repeatedly to reset the "GUIDE CH" column to "—." "—" appears between 1 and 255.
- The VCR does not allow entering the guide channel number, if the same number has been set.
- When you record a satellite broadcast using VIDEO Plus+, you need to select the desired channel on the satellite tuner manually.

Manual setup — Changing programme positions

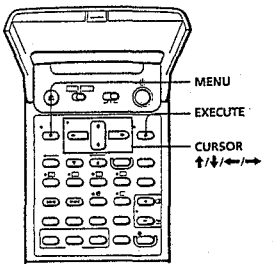

After setting the channels and VIDEO Plus+ guide channels, you can change the programme positions as you like.

Before you start...

- Turn on the VCR and the TV.
- Set the TV to the video channel.

e.g. Moving the programme position from 4 to 1.

1 •MENU •CURSOR •EXECUTE

Press MENU, then press CURSOR ↑/↓ to move the cursor (I) to SET UP CH & VIDEO Plus+ and press EXECUTE.

When using the EASY SET UP procedure, skip this step.

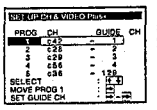

2 •CURSOR

Press CURSOR ↑/↓ to move the cursor (I) to the row on which you want to change the programme position, then press CURSOR ➡.

To display other pages for programme positions 6 to 60, press CURSOR ↑/↓ repeatedly.

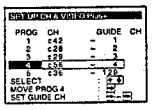

3 •CURSOR

Press CURSOR ↑/↓ until the selected channel and guide channel row moves to the desired programme position.

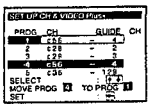

continued

4 Press CURSOR ⬅ to confirm the setting.

The two rows exchange the positions.

5 To change the programme position of another station, repeat steps 2 to 4.

6 •EXECUTE Press EXECUTE.

Manual setup — Setting the clock

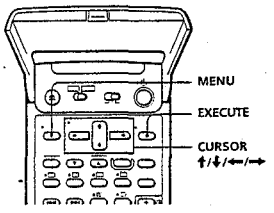

You must set the time and date on the VCR to be able to use the timer recording features properly. You can set the clock manually.

Before you start...

- Turn on the VCR and the TV.
- Set the TV to the video channel.

1 •MENU •CURSOR •EXECUTE

Press MENU, then press CURSOR ↑/↓ to move the cursor (I) to CLOCK SET and press *EXECUTE.*

When using the EASY SET UP procedure, skip this step.

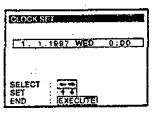

2 •CURSOR

Press CURSOR ↑/↓ to set the day.

The day of the week is set automatically.

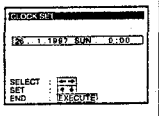

3 •CURSOR

Press CURSOR ➡ to highlight the month and set the month using CURSOR ↑/↓.

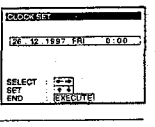

continued

4 *CURSOR

Set the year, hour and minutes in sequence, using CURSOR ➡ to highlight the item to be set, and CURSOR ↑/↓ to select the digits.

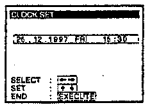

5 *EXECUTE

Press EXECUTE to start the clock.

Tips

- To change the digits during setting, press CURSOR ⬅ to return to the item to be changed, and select the digits using CURSOR ↑/↓.

Note

- The menu disappears automatically if you don't proceed for more than a few minutes.

Additional tasks

To	Press
Stop play	■ STOP
Pause play	❚❚ PAUSE*
Resume play after pause	❚❚ PAUSE or ▷ PLAY
Search forward	▶▶ FF during playback
Search backward	◀◀ REW during playback
Fast-forward the tape	▶▶ FF during stop
Rewind the tape	◀◀ REW during stop
High-speed rewind (8mm deck only)	◀◀◀ HI-SPEED REW
Eject the tape	⏏ EJECT

When you playback 8mm tape, noise appears during still, slow, and picture search.

* If more than 30 seconds (8mm deck) or 5 minutes (VHS deck) have passed after you pressed ❚❚ PAUSE, the VCR automatically returns to playback mode.

To use the time counter

At the point the tape that you want to find later, press COUNTER RESET. The counter in the display window resets to "0H00M00S." Search for the point afterwards by referring to the counter.

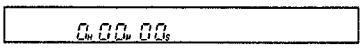

To display the counter on the TV screen, press DISPLAY.

Notes

- The counter resets to "0H00M00S" whenever a tape is reinserted.
- The counter stops counting when it comes to a portion with no recording.
- If you have connected your TV to your VCR using the EURO-AV cable, make sure to set the LINE 1 VIDEO OUT option in the SET UP MENU to NORM. However, if your TV has a S input setting, then set the LINE 1 VIDEO OUT option in the SET UP MENU to S.

Tip

- To rewind or advance the tape to the point that you have reset the counter to "0H00M00S", press TAPE RETURN.
- You can eject a tape even when the power is off. When you press ⏏ EJECT, the unit turns on automatically. After ejecting a tape, the unit turns off again.

Playing a tape

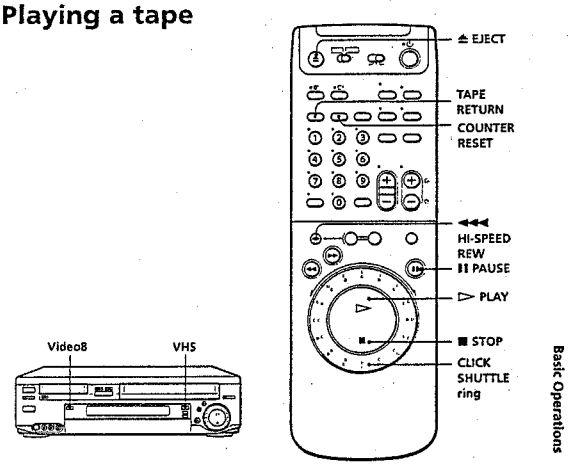

1 Turn on your TV and set it to the video channel.

2 Press either Video8 or VHS whichever you want to play back the tape.

3 Insert a tape.

The unit turns on automatically. The tape starts playing automatically if its safety tab has been removed. (VHS deck only)

4 PLAY

Press ▷ PLAY.

When the tape reaches the end, it will rewind automatically.

continued

Recording TV programmes

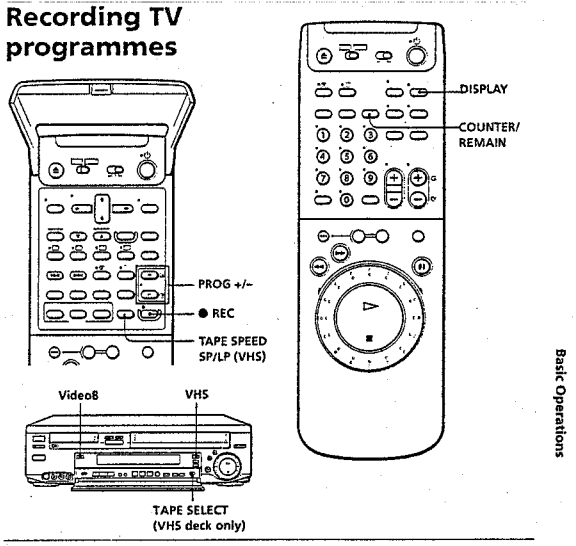

1 Turn on your TV and set it to the video channel.

2 Press either Video8 or VHS for the deck you want to use.

3 Insert a VHS tape with its safety tab in place or an 8 mm tape with the safety switch slid back so that the red portion does not show.

4 *PROG

Press PROG +/– to select the programme position you want to record.

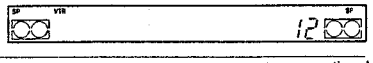

continued

5 TAPE SPEED SP/LP (VHS) Press TAPE SPEED to select the tape speed, SP or LP. (VHS deck only)

LP provides recording time twice as long as SP; however, SP produces better picture and audio quality.

When recording with 8mm tape, the VCR records in SP mode automatically. You cannot record in LP mode with 8mm tape.

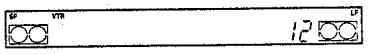

6 ● REC Press ● REC to start recording.

To stop recording

Press ■ STOP.

To check the remaining tape length

Press DISPLAY. The white bar indicates the approximate length of tape remaining. With the display on, press COUNTER/REMAIN to check the remaining time. Each time you press COUNTER/REMAIN, the time counter and the remaining time appear alternately. The remaining time also appears in the display window.

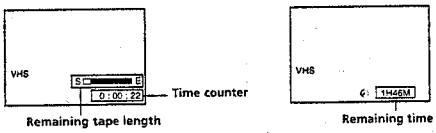

When you use the tape with more than 3-hour recording, set TAPE SELECT according to the tape type. (VHS deck only)

Tape type	Set the switch to
E-300	E300
E-240/E-260	E240
E-195 or less	E195

VHS tape

Tape type	Maximum recording / playback time	
	SP	LP
E-300	5 hrs.	10 hrs.
E-240	4 hrs.	8 hrs.
E-180	3 hrs.	6 hrs.
E-120	2 hrs.	4 hrs.
E-60	1hr.	2hrs.

If you use types other than those listed above, the remaining tape length may not be displayed correctly.

Tips

- You can select a video source from the LINE-1 (TV) or LINE-3 IN connector, or the LINE-2 IN VIDEO/AUDIO L/R jacks using INPUT SELECT.
- The display appears on the TV screen indicating information about the tape, but the information won't be recorded on the tape.
- To select programme positions, you can also use the programme number buttons on the remote commander. For two-digit numbers, press the -/-- (ten's digit) button followed by the number buttons.
- If you don't want to watch TV while recording, you can turn off the TV. When using a decoder, make sure to leave it on.

Notes

- If you have connected your TV to your VCR using the EURO-AV cable, make sure to set the LINE 1 VIDEO OUT option in the SET UP MENU to NORM. However, if your TV has a S input setting, then set the LINE 1 VIDEO OUT option in the SET UP MENU to S.
- You cannot record TV programmes using both the 8 mm deck and the VHS deck at the same time.
- You cannot record a video source from the one input connector using both the 8 mm deck and the VHS deck at the same time.
- If you insert a VHS tape with its safety tab removed or an 8mm tape with the safety switch slid to show the red portion, and press ● REC, the VCR automatically ejects the tape. To record, cover the tab hole of the VHS tape or slide the switch of the 8 mm tape so that the red portion is not visible.
- When the tape comes to an end, the VCR automatically rewinds the tape to the beginning.

To watch another TV programme while recording

1 Press TV/VIDEO on the remote commander (or TV/VTR on the VCR) to turn off the VTR indicator in the display window.

2 Select another programme position on the TV.

To save a recording

8 mm tapes

Video tapes have a safety switch to protect against accidental recording. To prevent accidental erasure of a recording, slide out the switch on the cassette so that the red portion is visible. A tape with its safety switch in this position ejects if you try to record on it.

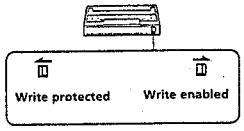

To re-record on a tape, slide the switch so that the red portion is not visible.

VHS tapes

Video tapes have a safety tab to protect against accidental recording. To prevent accidental erasure of a recording, break off the safety tab with a screwdriver or other tool. A tape with its safety tab removed ejects if you try to record on it.

To record on a tape with its safety tab removed, cover the tab hole.

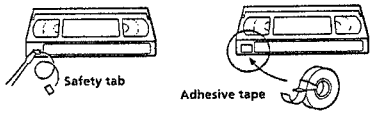

To select tape speeds

When recording, you can select either SP or LP. When playing back, the VCR automatically detects the tape speed. See the table below for the maximum recording/playback time in each speed.

8 mm tape

Tape type	Maximum recording / playback time	
	SP	LP (playback only)
E5-120	2 hrs.	4 hrs.
E5/P5-90	1 hr. 30 min.	3 hrs.
E5/P5-60	1 hr.	2 hrs.
E5/P5-30	30 min.	1 hr.

continued

Recording TV programmes using VIDEO Plus+

Just enter the programme's "PlusCode" listed in the TV programme guide. The date, times and programme position of that programme are set automatically. You can preset up to eight programmes at a time.

Before you start...

- Check that the VCR clock is set to the correct time.
- Insert a VHS tape with its safety tab in place or an 8mm tape with the safety switch slid so that the red portion does not show. Make sure the tape is longer than the total recording time.
- Turn on your TV and set it to the video channel.
- Set the guide channels (page 21).
- When using a satellite tuner, turn it on.

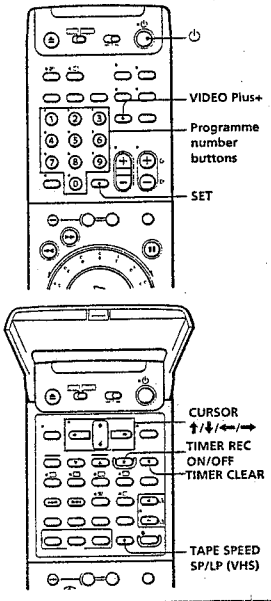

1 Press either Video8 or VHS which is set in the SET UP MENU.

2 VIDEO Plus+ Press VIDEO Plus+.

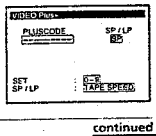

continued

3 ① ② ③ ④ ⑤ ⑥ ⑦ ⑧ ⑨ ⑩

Press the programme number buttons to enter the programme's PlusCode.

If you make a mistake, press TIMER CLEAR and re-enter the correct number.

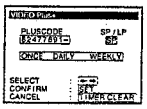

4 TAPE SPEED SP/LP (VHS)

Press TAPE SPEED to select SP or LP. (VHS tape)

When you record with an 8 mm tape, skip this step.

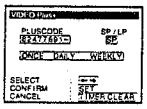

5 •CURSOR

Press CURSOR ←/→ to select ONCE, DAILY or WEEKLY.

To record	Display
Only once	ONCE
Every day Monday to Friday	DAILY
Once a week	WEEKLY

6 SET

Press SET.

The date, start and stop times, programme position, and tape speed appear on the TV screen.

If you want to turn on the PDC function, see "Timer recording with PDC signals" on page 40.

If the information is not correct, press TIMER CLEAR to cancel the setting.

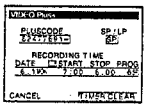

7 To enter another setting, repeat steps 2 to 6.

8 TIMER REC ON/OFF

Press TIMER REC ON/OFF to turn off the VCR.

The TIMER REC indicator appears in the display window and the VCR stands by for recording.

To stop recording

To stop the VCR while recording, press TIMER REC ON/OFF.

To record satellite broadcasts

If you connect a satellite tuner and the VCR, you can record satellite programmes.

1 Turn on the satellite tuner.
2 On the satellite tuner, select the satellite programme for which you wish to make a timer setting.
3 Repeat the steps described above.
4 Keep the satellite tuner turned on until the VCR finishes recording the satellite programme for which you have made a timer setting.

To use the VCR after setting the timer

To use the VCR before a timer recording begins, just press TIMER REC ON/OFF. The TIMER REC indicator turns off and press ⏻ to turn on the VCR. Remember to press TIMER REC ON/OFF to reset the VCR after using the VCR.

You can also do the following tasks while the VCR is recording:

- Reset the counter.
- Display tape information on the TV screen.
- Check the timer settings.
- Watch another TV programme.

Tip

- To cancel the procedure, press VIDEO Plus+ before pressing SET.

Note

- If the VCR beeps repeatedly, this means that:
  - The PlusCode is incorrect.
  - ONCE, DAILY, or WEEKLY was selected incorrectly. You cannot select DAILY or WEEKLY for a programme that airs more than seven days ahead.
- You cannot set the timer recording on both the 8 mm deck and VHS deck, since you have to select the deck before you make the setting. If one deck has been already standing by for timer recording, select that deck for timer recording.
- While one deck is standing by for timer recording or proceeding timer recording, another deck can only play back a recorded tape and record the line input source.

Setting the timer manually

If VIDEO Plus+ is not available in your area, follow the instructions below to set the timer to record programmes.

You can preset up to eight programmes at a time.

Before you start...

- Check that the VCR clock is set to the correct time.
- Insert a VHS tape with its safety tab in place or an 8 mm tape with the safety switch slid so that the red portion does not show. Make sure the tape is longer than the total recording time.
- Turn on your TV and set it to the video channel.
- When using a satellite tuner, turn it on.

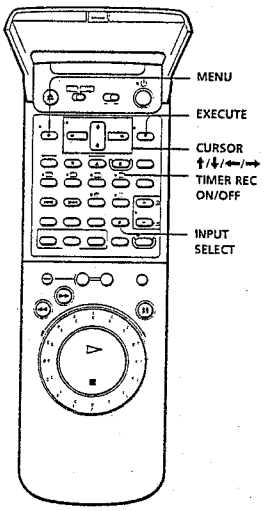

1 Press either Video8 or VHS which is set in the SET UP MENU.

2 •MENU •CURSOR •EXECUTE

Press MENU and select TIMER SET/CHECK, then press EXECUTE.

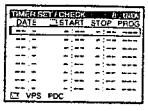

3 •CURSOR

Set the date, PDC function, start and stop times, programme position, and tape speed (VHS deck only):

1 Press CURSOR → to highlight each item in turn.
2 Press CURSOR ↑/↓ to set each item.

To correct a setting, press CURSOR ← to return to that setting and reset.

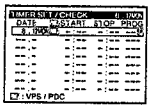

To record the same programme every day or the same day every week, press CURSOR ↓ while the date is highlighted. For details, see "Daily/weekly recording" on the next page.

If you don't want to use the PDC function, press CURSOR ↑/↓ to turn off V/P in the "V/P" position. For details, see "Timer recording with PDC signals" on the next page.

To record from other sources connected to the LINE-1(TV) or LINE-3 IN connector, or the LINE-2 IN jacks, press INPUT SELECT to display "L1," "L3," or "L2" in the "PROG" position.

4 •CURSOR

Press CURSOR → to confirm the setting.

The cursor (I) appears at the top of the line. To enter another setting, move the cursor to the next line and repeat step 3.

5 •EXECUTE

Press EXECUTE.

6 TIMER REC ON/OFF

Press TIMER REC ON/OFF to turn off the VCR.

The TIMER REC indicator appears in the display window and the VCR stands by for recording.

To record from a decoder or other source, leave the connected equipment switched on.

To stop recording

To stop the VCR while recording, press TIMER REC ON/OFF.

continued

Daily/weekly recording

In step 3 on the previous page, press CURSOR ↓ to select the recording pattern. Each time you press CURSOR ↓, the indication changes as shown below.

the current date → SUN-SAT → MON-SAT → MON-FRI → EVERY SAT .....
→ EVERY MON → EVERY SUN → 1 month later →(cycles backward)
→ the current date

Timer recording with PDC signals

The broadcast systems transmit PDC (Programme Delivery Control) signals with its TV programmes. These signals ensure that your timer recordings are made regardless of broadcast delay, early starts or broadcast interruptions.

In step 3 on the previous page, press CURSOR ↑/↓ to turn on/off the V/P indicator after you set the recording date. If you do not want to set the PDC function, turn off the V/P indicator.

You can also use the PDC function for a source connected to the LINE-1 (TV) and LINE-3 IN connectors, and the LINE-2 IN jacks.

Tips

- To set the programme position, you can also use the PROG +/– or programme number buttons.
- To set the tape speed, you can also use TAPE SPEED. (VHS deck only)

Notes

- When setting the timer with PDC signals, enter the start and stop times exactly as indicated in the TV programme guide, otherwise the PDC function won't work.
- If the PDC signal is too weak or the broadcasting station failed to transmit PDC signals, the VCR will start recording at the set time without using the PDC function.
- You cannot make setting for timer recording on both 8 mm deck and VHS deck, since you have to select the deck before you make setting. If one deck has been already standing by for timer recording, select that deck for timer recording.
- While one deck is standing by for timer recording or proceeding timer recording, another deck can only play back a recorded tape and record the line input source.

Playing/searching at various speeds

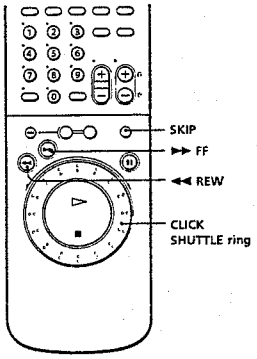

Playback options	Operation
Fast-forward/rewind	During stop, press ▶▶ FF or ◀◀ REW.
View the picture during fast-forward or rewind	During fast-forward, hold ▶▶ FF down. During rewind, hold ◀◀ REW down.
Skip a scene	During playback, press SKIP. Pressing once skips about 30 seconds.
Rewind and start play	During stop, hold ◀◀ REW on the VCR, and press ▷ PLAY on the VCR.

continued

Using the CLICK SHUTTLE ring

With the CLICK SHUTTLE ring, you can operate a variety of playback options.

During playback or pause, turn the CLICK SHUTTLE ring clockwise or counterclockwise. Each change in the CLICK SHUTTLE ring position changes the playback mode, and the corresponding mark appears on the TV screen for a few seconds in the following way if the on-screen display function is on:

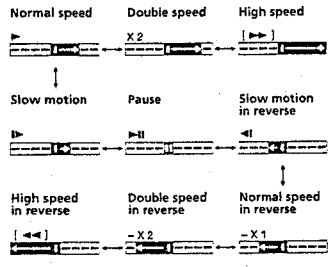

To resume normal playback

Press ▷ PLAY.

Tip

- Adjust the picture using ▼/▲ TRACKING if (VHS deck only):
  - Streaks appear while playing in slow motion.
  - Bands appear at the top or bottom while pausing.
  - The picture shakes while pausing.

Notes

- The playback sound is muted during these operations.
- In the LP mode, noise may appear or there may be no colour.
- The colour of the picture may not be reproduced normally while playing back a tape at various speeds or pausing.
- Tapes recorded in the LP mode on other VCRs can be played back on this VCR but the picture quality cannot be guaranteed.
- If the playback mode mark doesn't appear on the TV screen, press DISPLAY.

Recording TV programmes using the quick timer

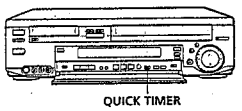

After starting recording in the normal way, you can have the VCR stop recording automatically after a specified duration.

1 While recording, press QUICK TIMER once.

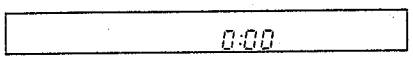

2 Press QUICK TIMER repeatedly to set the duration.

Each press advances the time in increments of 30 minutes.

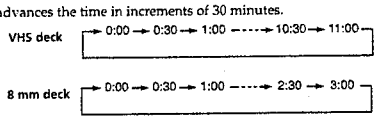

The duration decreases minute by minute to 0:00, then the VCR stops recording and turns off automatically.

To extend the duration

Press QUICK TIMER repeatedly to set to the new duration.

To stop recording

To stop the VCR while recording, press TIMER REC ON/OFF.

Tip

- You can also set the quick timer and start recording during the stop mode.

Checking/ changing/ cancelling timer settings

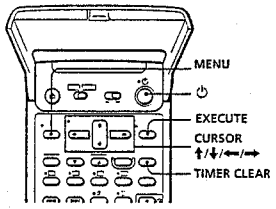

Before you start...

- Turn on your TV and set it to the video channel.

1 Press either VHS or Video8 whichever you set the timer for.
2 Press TIMER REC ON/OFF to turn off the TIMER REC indicator.
3 Press ⏻ to turn on the VCR.
4 Press MENU, then select TIMER SET/CHECK.

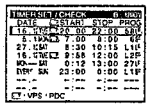

- If you want to change a setting, go on to the next step.
- If you do not need to change the settings, press EXECUTE and TIMER REC ON/OFF, then turn off the VCR to return to recording standby.

5 Press CURSOR ↑/↓ to select the setting you want to change or cancel:

- To change the setting, press CURSOR ←/→ to highlight the item you want to change, and press CURSOR ↑/↓ to reset it.
  To cancel the PDC function, turn off the V/P indicator.
  Then, press CURSOR → repeatedly until the cursor (I) appears at the top of the line.
- To cancel the setting, press TIMER CLEAR.

6 Press EXECUTE.

If any settings remain, press TIMER REC ON/OFF. The VCR turns off and returns to recording standby.

When the timer settings overlap

The programme that starts first has priority and the second programme starts recording only after the first programme has finished. If the programmes start at the same time, the programme listed first in the menu has priority.

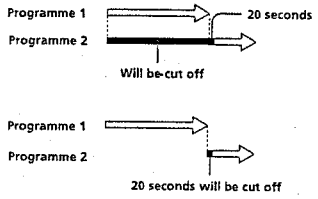

Recording stereo and bilingual programmes

In NICAM system

This VCR receives and records stereo and bilingual programmes based on the NICAM system (the NICAM indicator appears). When a stereo or bilingual programme is received, the STEREO or MAIN/L indicator appears in the display window.

To record a NICAM programme, NICAM in the SET UP MENU should be set to ON (initial setting). To check the menu setting, see page 50.

To select the sound while recording

Press AUDIO MONITOR to select the sound you want.

Stereo programme

To listen to	On-screen display	Display window
Stereo	STEREO	STEREO
Standard sound*	No indicator	No indicator

* Usually the mixed sound of left and right channels (monaural) (VHS deck only)

Bilingual programme

To listen to	On-screen display	Display window
Main	MAIN	MAIN/L
Sub	SUB	SUB/R
Main and sub	MAIN/SUB	MAIN/L, SUB/R
Standard sound*	No indicator	No indicator

* Usually the main sound (monaural) (VHS deck only)

Selecting the sound during playback

Press AUDIO MONITOR to select the sound you want.

Stereo programme

To listen to	On-screen display	Display window
Stereo	STEREO	STEREO
Left channel	LCH	MAIN/L
Right channel	RCH	SUB/R
Standard sound*	No indicator	No indicator

* Usually the main sound (monaural) (VHS deck only)

Bilingual programmes
8 mm tape

To listen to	On-screen display	Display window
Main	MAIN	MAIN/L
Sub	SUB	SUB/R
Main and sub	MAIN/SUB	MAIN/L, SUB/R

VHS tape

To listen to	On-screen display	Display window
Main	LCH	MAIN/L
Sub	RCH	SUB/R
Main and sub	STEREO	MAIN/L, SUB/R
Standard sound	No indication	No indication

How sound is recorded on a video tape

This VCR records sound onto two different tracks. High-fidelity sound (usually stereo) is recorded onto the main track (VHS tape) or the standard (AFM) track (8 mm tape) along with the picture. Monaural sound is recorded onto the normal audio track along the edge of the tape (VHS tape).

8 mm tape

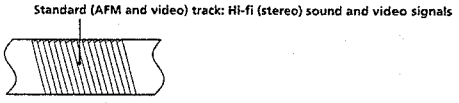

VHS tape

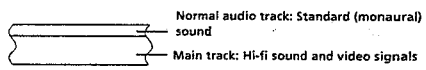

Notes

- To listen to playback sounds in stereo, you must use the LINE-1(TV) or LINE OUT connections.
- When you play a tape recorded in monaural, the sound is heard in monaural regardless of the AUDIO MONITOR setting.
- If the AUDIO MONITOR button does not function, check that VHS AUDIO MIX in the SET UP MENU is set to OFF.

Searching using the index function (VHS deck only)

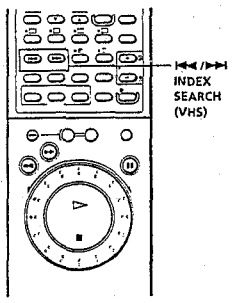

The VCR marks the tape with an index signal at the point where each recording begins. Use these signals as references to find a specific recording. The VCR can search up to 99 index signals ahead of or behind the current position.

1 Insert an indexed tape into the VCR.

2 Press I◄◄ /►►I INDEX SEARCH repeatedly to specify how many index signals ahead or behind you want to search:

- To search ahead, press ►►I INDEX SEARCH.
- To search backwards, press I◄◄ INDEX SEARCH.

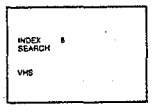

The VCR starts searching and the index number on the TV screen counts down to zero. Playback starts automatically from that point.

To stop searching

Press ■ STOP.

Note

- No index signal will be added when recording starts from recording pause. However, an index signal will be marked if you change the channel during recording pause.

Adjusting the picture (VHS deck only)

Adjusting the tracking

Although the VCR automatically adjusts the tracking when playing a tape (the AUTO TRACKING indicator flashes in the display window, then lights steadily), distortion may occur if the tape was recorded in poor condition. If so, manually adjust the tracking.

Press ▼/▲ TRACKING to display the tracking meter. The distortion should disappear as you press one of the two buttons. If you cannot get a clear picture with manual adjustment, press TRACKING AUTO/MANU (VHS) to return to automatic adjustment.

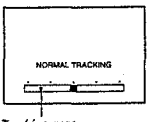

Tracking meter

About Optimum Picture Control (OPC)

Optimum Picture Control (OPC) automatically improves recording and playback quality by adjusting the VCR to the condition of the video heads and tape. To maintain better picture quality, we recommend that you set VHS OPC to ON in the SET UP MENU (with the OPC indicator in the display window lit).

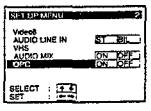

OPC playback

The OPC function automatically works on all types of tapes, including rental tapes and tapes that were not recorded with OPC.

OPC recording

Whenever you insert a tape and first start recording, the VCR adjusts to the tape using the OPC function (the OPC indicator flashes rapidly). This adjustment is retained until the tape is ejected.

To deactivate the OPC

Press MENU and select SET UP MENU, then set VHS OPC to OFF. The OPC indicator in the display window goes off.

Note

- There is a delay of a few seconds before the VCR actually starts recording while the VCR analyses the tape. To avoid the delay, first set the VCR to recording pause (the OPC indicator flashes slowly) and press ● REC to have the VCR analyse the tape (the OPC indicator flashes rapidly). After the OPC indicator stops flashing, press II PAUSE to start recording immediately. If you want to start recording quickly without using the OPC function, first set the VCR to recording pause (the OPC indicator flashes slowly) and press II PAUSE to start recording.

Changing menu options

1 Press MENU, then select SET UP MENU.

2 Press CURSOR ↑/↓ to select the option to change, then press CURSOR ←/→ to change the setting.

3 Press EXECUTE to return to the original screen.

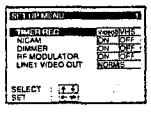

Menu choices

Initial settings are indicated in bold print.

Menu option	Set this option to
TIMER REC	Video8 to select the 8 mm deck for timer recording. **VHS** to select the VHS deck for timer recording.
NICAM	**ON** to listen to and record stereo/bilingual programmes that are broadcast on the NICAM system and recorded. **OFF** when you do not wish to use the NICAM system and when recording an 8 mm standard sound. For details, see page 46.
DIMMER	ON to dim the VCR display. **OFF** to brighten it.
RF MODULATOR	**ON** if you have connected the VCR to your TV using only the aerial cable. OFF if you have connected the VCR to your TV using the EURO-AV, S or AV cable.
LINE 1 VIDEO OUT	**NORM** when using a EURO-AV cable. S when using a EURO-AV cable connected to a TV with an S connection.
Video8 AUDIO LINE IN	**ST** to listen to and record stereo sound using and the LINE IN jacks when selected the 8 mm deck. BIL to listen to and record bilingual programmes using the LINE IN jack when selected the 8 mm deck.
VHS AUDIO MIX	ON to listen to the hi-fi and normal audio tracks at the same time when selected the VHS deck. The AUDIO MONITOR button becomes inoperable. **OFF** to select the sound using the AUDIO MONITOR button when selected the VHS deck.
VHS OPC	**ON** to activate the OPC (Optimum Picture Control) when selected the VHS deck. OFF to deactivate it. For details, see page 49.

Using the 8 mm deck and VHS deck at the same time

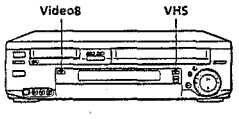

Using one deck while the other is playing back a tape

1 Press Video8 or VHS to select the deck that is not in use.

2 Use the selected deck.

Using one deck while the other is recording

1 Press Video8 or VHS to select the deck that is not in the recording mode.

2 Use the selected deck.

Using one deck while the other is standing by for timer recording or proceeding timer recording

1 Press Video8 or VHS to select the deck that is not in use.

2 Use the selected deck.

While one deck is standing by for timer recording or proceeding timer recording, the other deck can only play back a recorded tape and record the line input source.

Note

You cannot record two TV programmes at the same time, or use both decks at the same time to record one line input source.

One button dubbing

One button dubbing is a way of editing the entire tape contents to another tape automatically from one deck to the other.

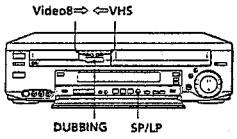

Before you start editing

- Turn on your TV and set it to the video channel.

1 Insert a source tape into one deck and a tape for recording into the other deck.

2 Press Video8 ⇨ or ⇦ VHS to select the editing direction.

"Video8 ⇨ " means that the recording is made from the 8 mm tape to the VHS tape.

"⇦ VHS" means that the recording is made from the VHS to the 8 mm tape.

3 Press SP/LP button to select TAPE SPEED of the VHS tape when you record from the 8mm tape to the VHS tape.

When you record from the VHS tape to the 8 mm tape, skip this step.

4 Press DUBBING.

The VCR rewinds both tapes to the beginning, and starts dubbing automatically. When either tape reaches the end, the VCR rewinds both tapes to the beginning, and ejects them. And then, the power turns off automatically.

To stop editing

Press the ■ STOP button.

Notes

- When editing from VHS tape to 8 mm tape, note the following:
  - If editing is proceeding with a VHS tape that you have recorded, the tape may be automatically ejected. In this case, check the safety tab. If the tab is removed, cover the tab hole with adhesive tape and after recording, remove the tape to protect the recording. Make sure of the direction for recording so that you won't accidentally erase an important recording.
  - If the safety switch on the 8 mm tape to be used as an original tape is slid out so that the red portion is visible, the tape is automatically ejected. In this case, slide the switch back in place so that the red portion is not visible. Make sure of the direction for recording.
- Noise may appear at the beginning part of the edited tape.
- If the playback deck play blank for 5 minutes, both decks automatically stop, rewind tapes to the beginning, and eject them. And then, the power turns off automatically.

Cut editing

You can edit VCR recording from one deck to the other with cutting your unwanted event.

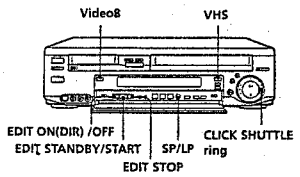

Before you start editing

- Turn on your TV and set it to the video channel.

1 Insert a source tape into one deck and a tape for recording into the other deck.

Locate the recording start point by rewinding or fast-forwarding.

2 Press Video8 or VHS to select the recording deck.

When you select VHS, press SP/LP button to select TAPE SPEED of the VHS tape.

3 Press EDIT ON (DIR)/OFF to select the editing direction.

Each pressing of the button changes as follows:

→ Video8 ⇨ VHS → Video8 ⇦ VHS → no indication →

"Video8 ⇨ VHS" means that the recording is made from the 8 mm tape to the VHS tape.

"Video8 ⇦ VHS" means that the recording is made from the VHS to the 8 mm tape.

4 Press EDIT STANDBY/START.

The playback deck enters the playback pause mode and the recording deck enters the recording pause mode. The indicator above the button flashes.

5 Press EDIT STANDBY/START again.

Both decks release the pause and starts editing. The indicator above the button lights.

6 Press EDIT STANDBY/START at the beginning of the unwanted event.

Both decks enter the pause mode. The indicator above the button flashes.

continued

Cut editing (continued)

7 Select the playback deck and turn the CLICK SHUTTLE ring on the VCR until the unwanted event starts.

8 Press EDIT STANDBY/START again when a desired event appears on the screen.

Editing starts. The indicator above the button lights.

9 Repeat steps 6 to 8 to cut other unwanted events.

Select the playback deck and turn the CLICK SHUTTLE ring on the VCR until the unwanted event starts.

10 When editing is finished, press EDIT STOP.

11 Press EDIT ON(DIR)/OFF so that the Video8 ⇨ VHS or Video8 ⇦ VHS indicator goes off.

To stop the VCR while editing

Press EDIT STOP.

Notes

- When editing from VHS tape to 8 mm tape, note the following:
  - If editing is proceeding with a VHS tape that you have recorded, the tape may be automatically ejected. In this case, check the safety tab. If the tab is removed, cover the tab hole with adhesive tape and after recording, remove the tape to protect the recording. Make sure of the direction for recording so that you won't accidentally erase an important recording.
  - If the safety switch on the 8 mm tape to be used as an original tape is slid out so that the red portion is visible, the tape is automatically ejected. In this case, slide the switch back in place so that the red portion is not visible. Make sure of the direction for recording.
- Noise may appear at the beginning part of the edited tape.
- When you press ❚❚ PAUSE or EDIT STANDBY/START while editing from the 8mm tape to the VHS tape, the picture may turn obscure.

Audio dubbing (VHS deck only)

This feature lets you record over the normal audio track. The monaural sound previously recorded is replaced while the original hi-fi sound remains unchanged. Use this feature to add commentary to a tape that you have recorded with a camcorder.

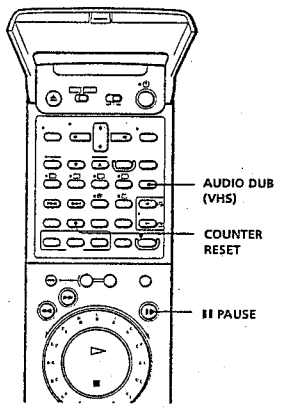

Before you start editing...

- Turn on your TV and set it to the video channel.
- Press INPUT SELECT to display "L2" or "L3" in the display window.

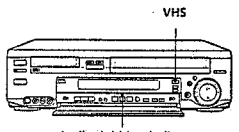

Audio dubbing indicator

1 Insert the source tape into the stereo system (or the playback VCR). Search for the point to start playback and set it to playback pause.

2 Press VHS to select the VHS deck.

3 Insert a prerecorded tape with its safety tab in place into this (recording) VCR. Search for the end of the section to be replaced and press ❚❚ PAUSE.

4 Press COUNTER RESET on this VCR to reset the counter to "0H00M00S."

5 Rewind the prerecorded tape to the beginning of the section to be replaced.

The VCR pauses.

6 Press AUDIO DUB (VHS).

The audio dubbing indicator lights up.

continued

Audio dubbing (VHS deck only) (continued)

7 To start editing, press the ❚❚ PAUSE buttons on this VCR and the stereo system (or other VCR) at the same time.

When the counter reaches "0H00M00S," audio dubbing stops automatically.

To stop while editing

Press the ■ STOP buttons on this VCR and the stereo system (or other VCR).

To listen to both the hi-fi and normal audio

Set VHS AUDIO MIX to ON in the SET UP MENU (page 50). Use this feature to listen to dubbed audio over the original hi-fi audio. When VHS AUDIO MIX is set to ON, the AUDIO MONITOR button does not function. Remember to reset VHS AUDIO MIX to OFF after playing the tape.

Editing with another VCR

How to hook up to record on this unit

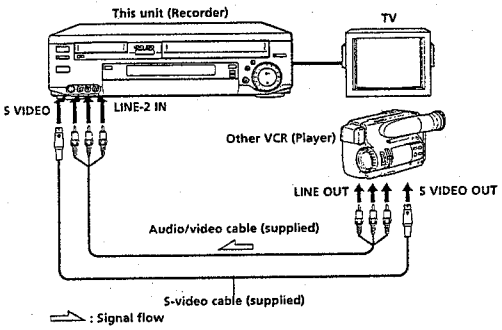

How to hook up to record on another VCR

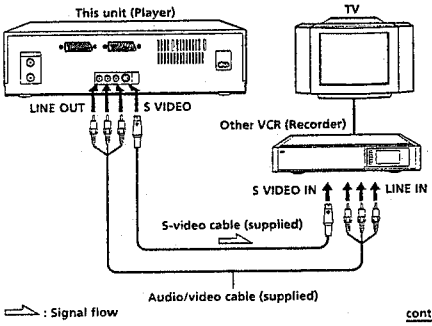

continued

Editing with another VCR (Continued)

Tips
- When you use LINE-2 IN jack on the front, remove LINE IN jack cover.
- Make sure you connect the plugs to jacks of the same colour.
- When connection is made using the EURO-AV connector, if the other VCR doesn't have a EURO-AV (Scart) connector, use the VMC-2106 EURO-AV connecting cable.

Operation (when recording on this VCR)

Before you start editing

- Press INPUT SELECT to display "L2" in the display window.
- Press TAPE SPEED to select the recording tape speed (SP/LP) (VHS deck only).
- If the other (playback) VCR has an EDIT function, set it to ON.

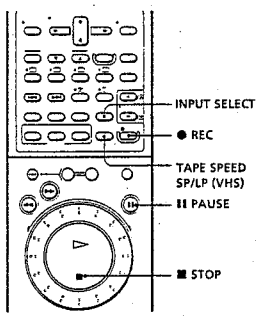

1 Insert the source tape into the other (playback) VCR. Search for the point to start playback and set it to playback pause.

2 Insert a tape for recording into this (recording) VCR. Search for the point to start recording and press ❚❚ PAUSE.

The VCR enters playback pause mode.

3 Press ● REC on this VCR to set it to recording pause.

4 To start editing, press the ❚❚ PAUSE buttons on both VCRs to release the VCRs from pause.

For best results, press the pause on the playback VCR just before pressing ❚❚ PAUSE button on this VCR.

To stop editing

Press the ■ STOP buttons on both VCRs.

Tips
- To make your editing more precise, release the VCRs from pause by pressing ❚❚ PAUSE buttons on the VCRs, not on the remote comander.
- To cut out unwanted events while editing, press ❚❚ PAUSE on this VCR when an unwanted event begins. When it ends, press ❚❚ PAUSE again to resume recording.

Hi8 (high eight) video system

Both Hi8 and standard 8 cassette tapes can be used with this VCR. Refer to the charts below for the compatibility between the Hi8 video system and the standard 8 system.

When playing a tape/recording on a tape

This VCR automatically detects the type of tape, either Hi8 or standard 8. When playing back, this VCR also automatically detects the tape speed (either SP or LP) the tape was recorded in.

Tape type	Recording format	Playback mode
Hi8 tape	Hi8 (high eight)	Hi8 (high eight)
Standard 8 tape	8 (standard 8 mm)	8 (standard 8 mm)

Saving a recording

Slide out the switch on the cassette so that the red colour appears.

To re-record on the cassette, slide the switch back.

Notes

- Hi8 recording or playback can only be done using a Hi8 tape.
- You cannot make Hi8 format recordings on standard 8 tapes.

Index to parts and controls

Refer to the pages indicated in parentheses ( ) for details.

Front panel

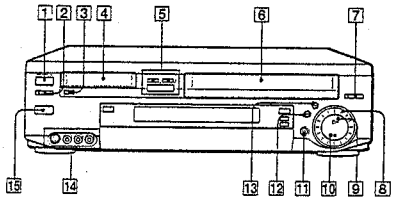

1 ON/STANDBY switch/indicator (12)
2 8 mm ⏏ EJECT button (30)
3 ◀◀◀◀ High speed rewind Video8 button (30)
4 8 mm tape compartment
5 DUBBING/Video8 ⇨/⇦ VHS buttons (52)
6 VHS tape compartment
7 VHS ⏏ EJECT button (30)
8 CLICK SHUTTLE ring (42)
9 ▷ PLAY button (29)
10 ■ STOP button (30)
11 ❚❚ PAUSE button (30)
12 ◀◀ REW button (30)
13 ▶▶ FF button (30)
14 LINE-2 IN VIDEO/AUDIO L/R jacks (57)
LINE-2 S VIDEO connector (57)
15 Remote sensor (5)

continued

Index to parts and controls (continued)

Front panel, with cover opened

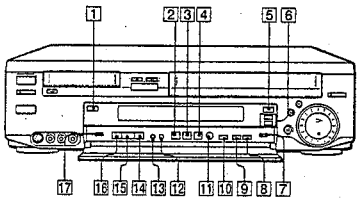

1 Video8 button (29)
2 TV/VTR button
3 AUDIO DUB (VHS) button (55)
4 COUNTER RESET button (30)
5 VHS button (29)
6 PROGRAM +/– buttons (13)
7 TAPE SELECT switch (VHS deck only) (32)
8 REC button
9 TIMER REC (ON/OFF) button (36)
10 QUICK TIMER button (43)
11 TAPE SPEED SP/LP (VHS) button (32)
12 RF-CH button (12)
13 EASY SET UP button (14)
14 EDIT STOP button (54)
15 EDIT STANDBY / START button (53)
16 EDIT ON (DIR) / OFF button (53)
17 COMMAND MODE switch (12)

Rear panel

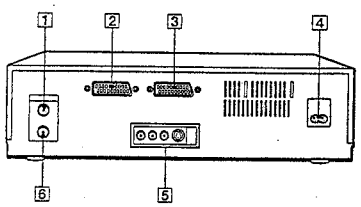

1 AERIAL OUT connector (9)
2 ⇦ LINE-1 (TV) connector (10)
3 ⇨ LINE-3 IN connector (34)
4 AC IN connector (9)
5 LINE OUT AUDIO / VIDEO jacks (10)
LINE OUT S VIDEO connector (10)
6 AERIAL IN connector (9)

continued

Display window

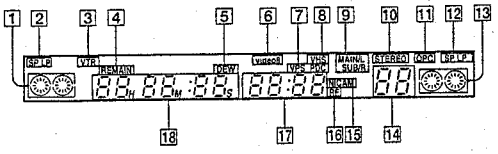

1 8 mm tape indicator
2 8 mm tape speed indicator
3 VTR indicator
4 REMAIN indicator (32)
5 DEW indicator (60)
6 Video8 indicator
7 VPS/PDC indicator (40)
8 VHS indicator
9 MAIN/L/SUB/R indicator (46)
10 STEREO indicator (46)
11 OPC indicator (49)
12 VHS speed indicator (32)
13 VHS tape indicator
14 Channel indicator (31)
15 NICAM indicator (46)
16 RF indicator (12)
17 Clock/quick timer remaining time (43)
18 Time counter/clock (30)

Remote commander

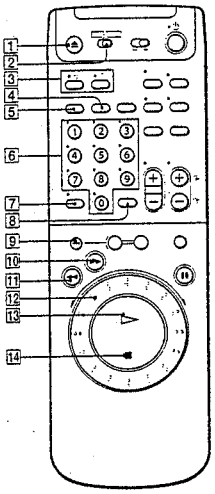

1 ⏏ EJECT button (30)
2 TV / VIDEO remote control switch (5)
3 ▢ ▤ TV Teletext buttons (6)
4 COUNTER RESET button (30)
5 TAPE RETURN button (30)
6 Programme number buttons (6, 35)
7 -/-- (ten's digit) button (6, 34)
8 SET button (36)
9 ◀◀◀ HI-SPEED REW (Video8) button (29)
10 ▶▶ FF button (30)
11 ◀◀ REW button (30)
12 CLICK SHUTTLE ring (42)
13 ▷ PLAY button (29)
14 ■ STOP button (30)

continued

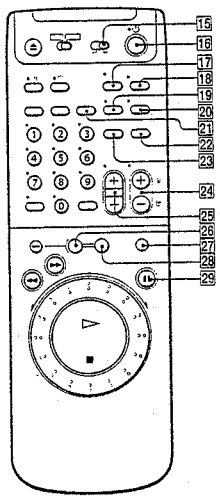

15 COMMAND MODE switch (7)
16 ⏻ (on/standby) switch (6)
17 AUDIO MONITOR button (6, 46)
18 DISPLAY button (6)
19 WIDE button (*for TV*)(8)
20 TV/VIDEO button (6)
21 COUNTER / REMAIN button (32)
22 INPUT SELECT button (34, 55)
23 VIDEO Plus+ button (35)
24 PROG +/- buttons (6, 13)
TEXT/TEXT Teletext page access buttons (*for TV*)
25 VOL +/- buttons (*for TV*) (6)
26 Video8 button (29)
27 SKIP button (41)
28 VHS button (29)
29 ❚❚ PAUSE button (30)

Remote commander (In the lid)

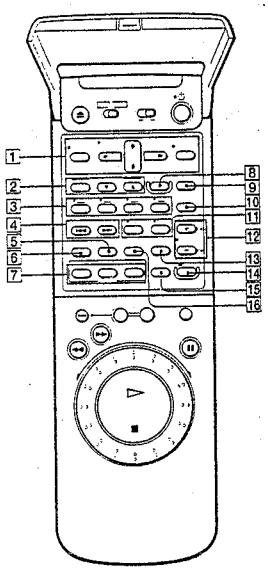

1 Menu buttons (6, 50)
MENU button
CURSOR ↑/↓/←/→ buttons
EXECUTE button
2 ▼/▲ TRACKING AUTO/MANU (VHS) buttons (VHS deck only) (49)
3 FASTEXT buttons (6)
4 ⏮ /⏭ INDEX SEARCH buttons (48)
5 COUNTER RESET button (30)
6 TAPE RETURN button (30)
7 EDIT buttons (53)
ON (DIR) / OFF button
STANDBY / START button
STOP button
8 TIMER REC ON /OFF button (36)
9 TIMER CLEAR button (36)
10 AUDIO DUB (VHS) button (55)
11 ▢ ▤ TV Teletext buttons (6)
12 PROG +/- buttons (6)
TEXT/TEXT Teletext page access buttons (*for TV*)
13 INPUT SELECT button (34, 55)
14 ● REC button (32)
15 TAPE SPEED SP/LP (VHS) button (32)
16 COUNTER / REMAIN button (32)

SECTION 2
DISASSEMBLY

Note : Follow the disassembly procedure in the numerical order given.

2-1. UPPER CASE, FRONT PANEL ASSEMBLY

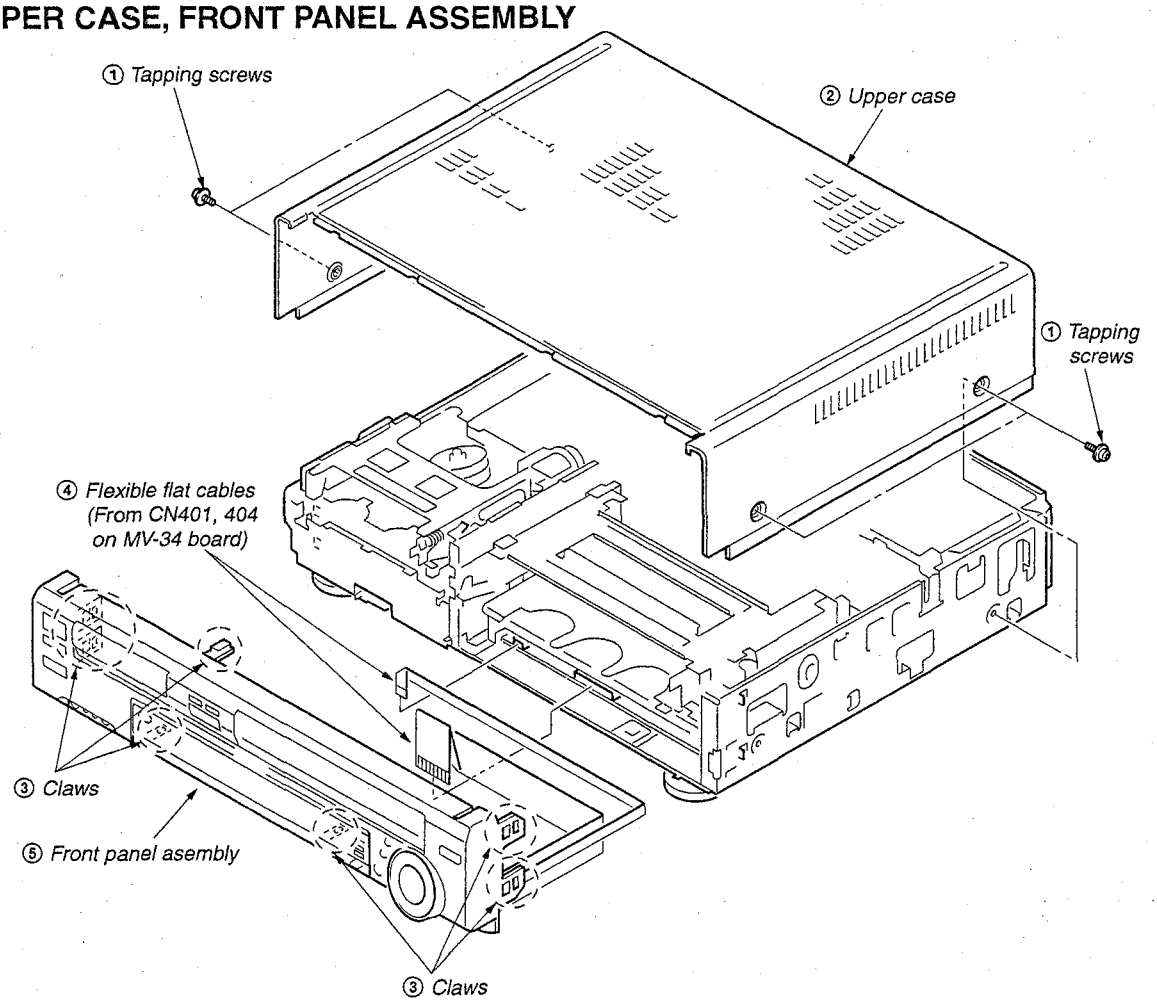

2-2. FL-79, FR-113 BOARDS, ROTARY SWITCH

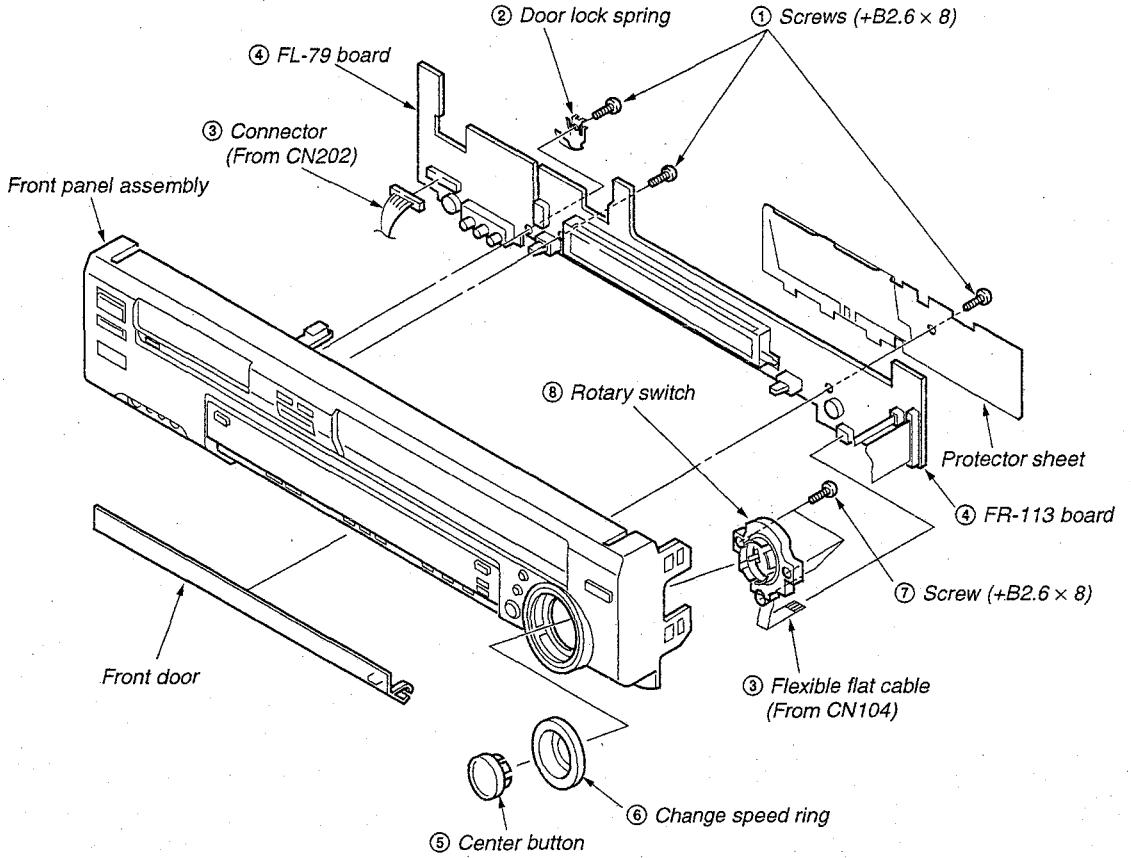

2-3. CP-76 BOARD

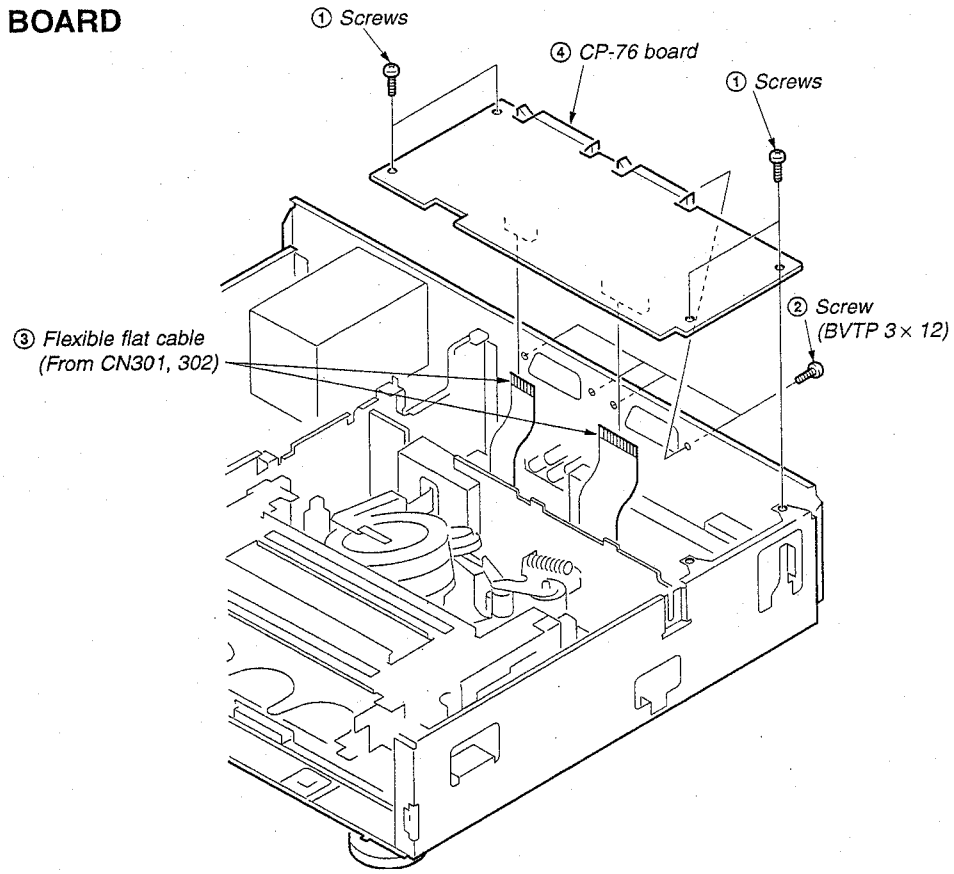

2-4. RV-50 BOARD

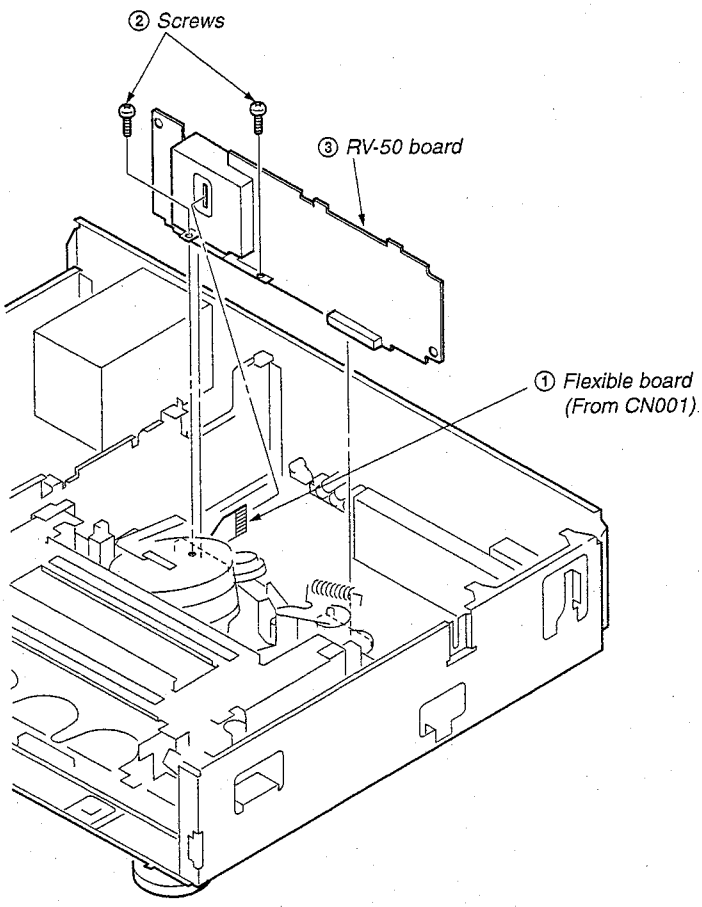

2-5. VHS MECHANISM DECK ASSEMBLY

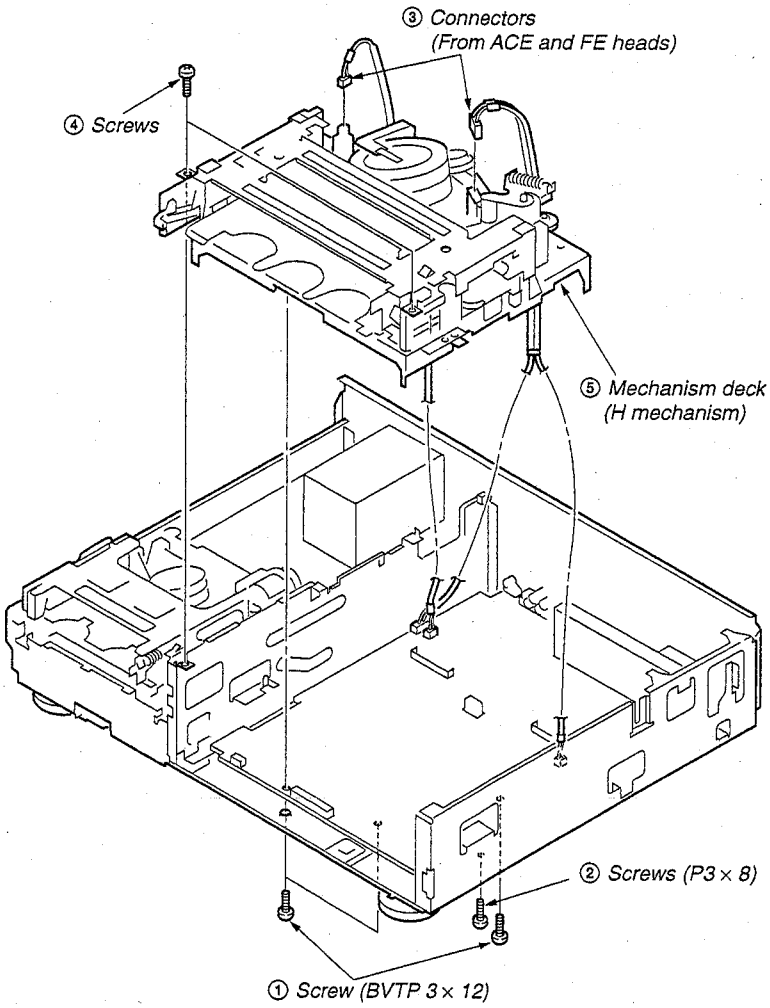

2-6. MV-34 BOARD

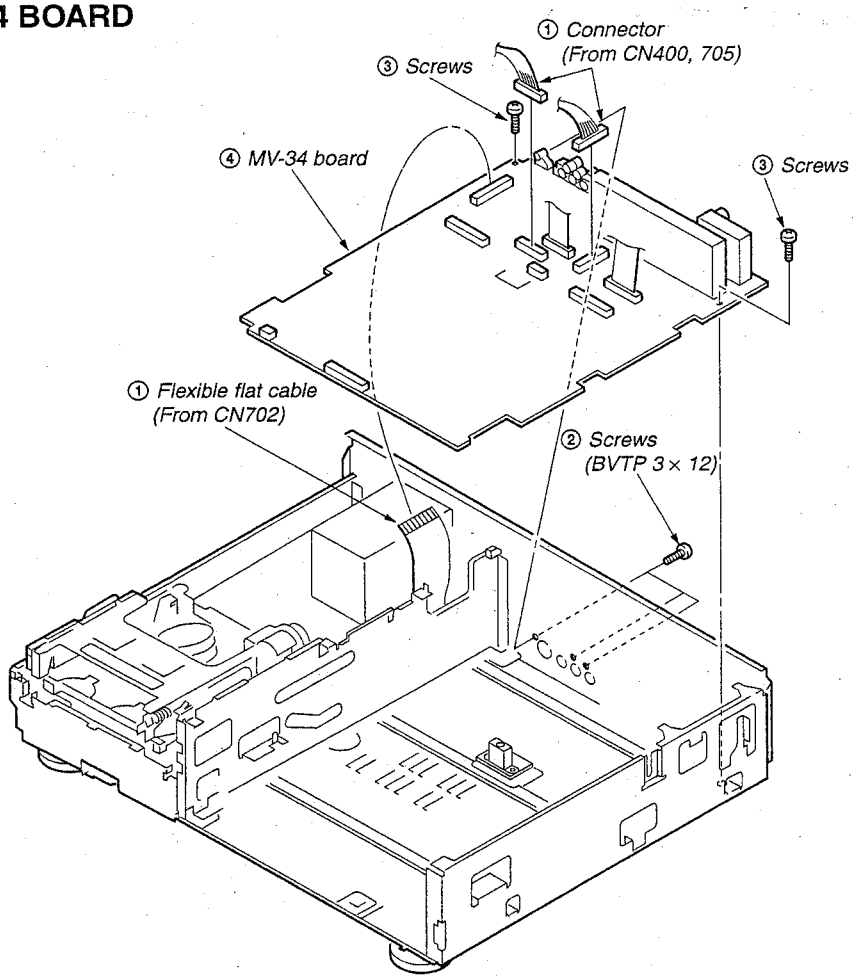

2-7. PS-380 BOARD

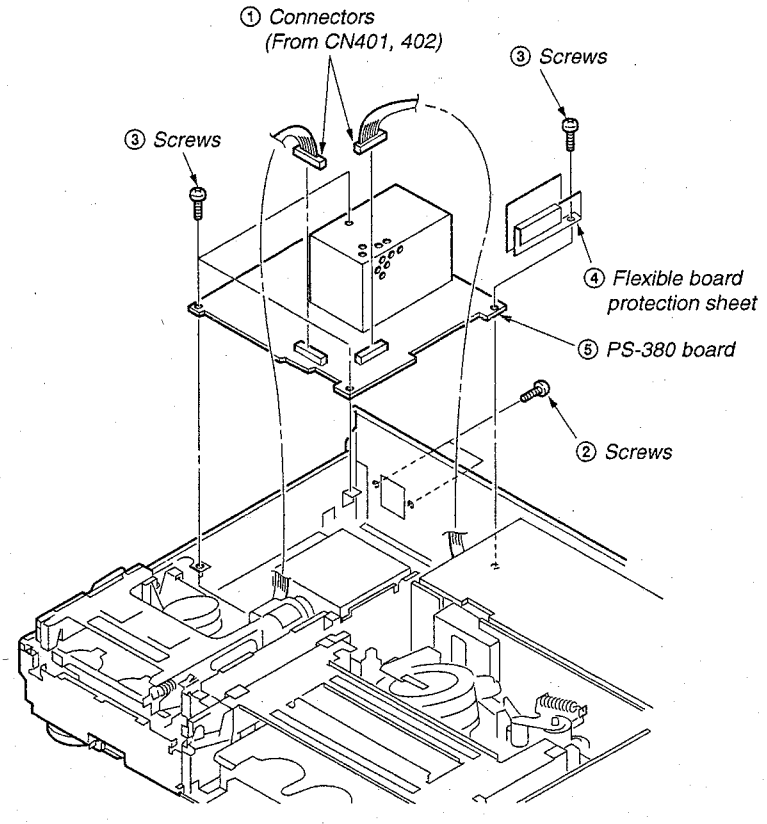

2-8. MH-18 BOARD (WITH Video 8 MECHANISM DECK)

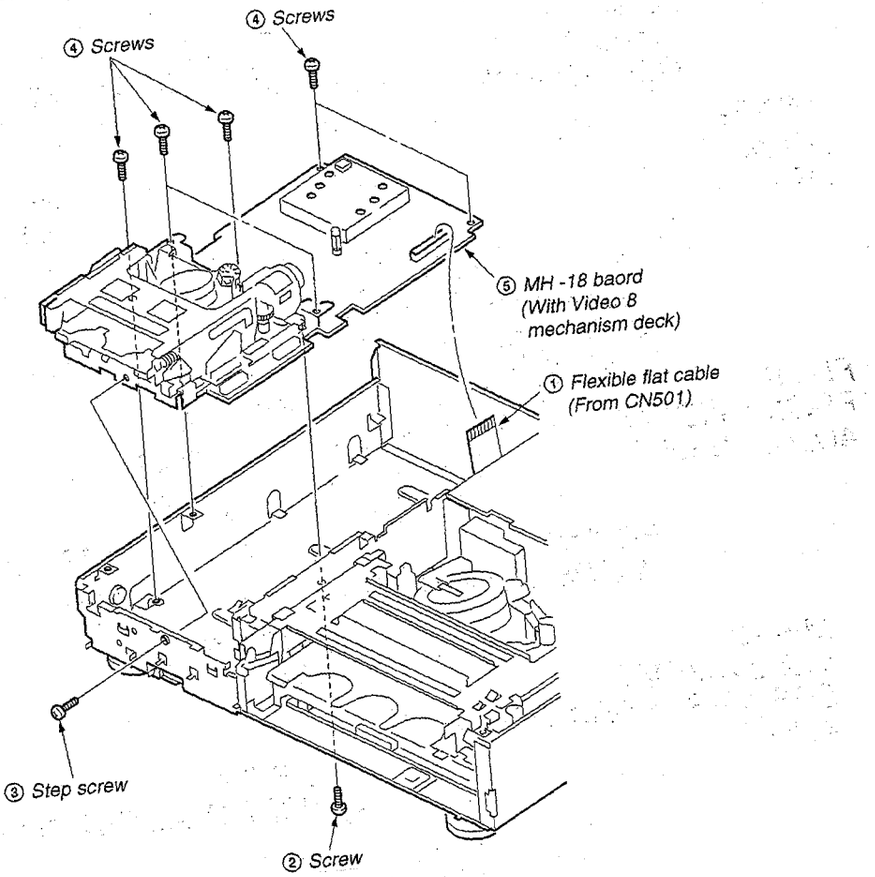

2-9. Video 8 MECHANISM DECK (WITH RP-211 BAORD)

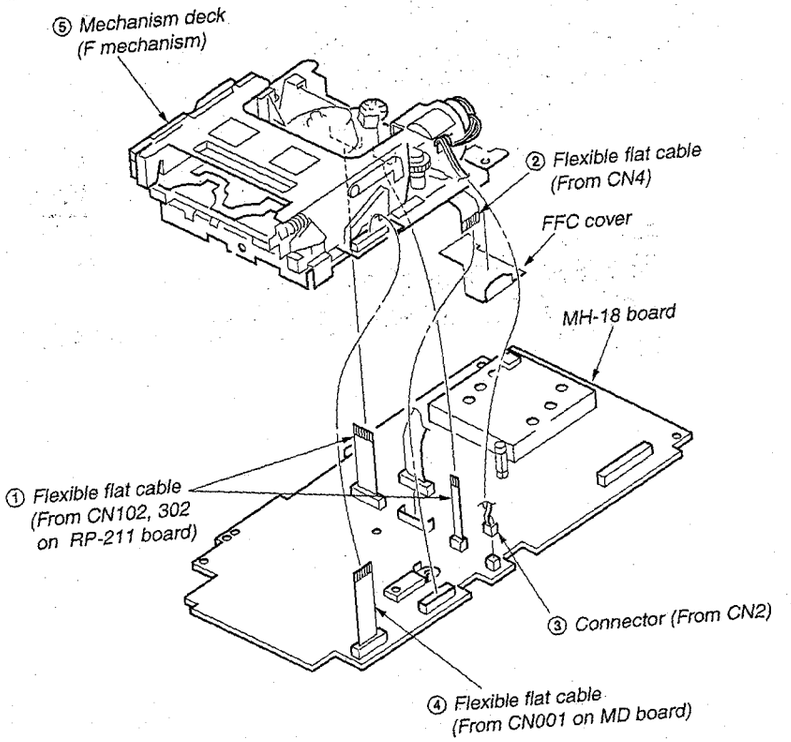

2-10. CIRCUIT BOARDS LOCATION

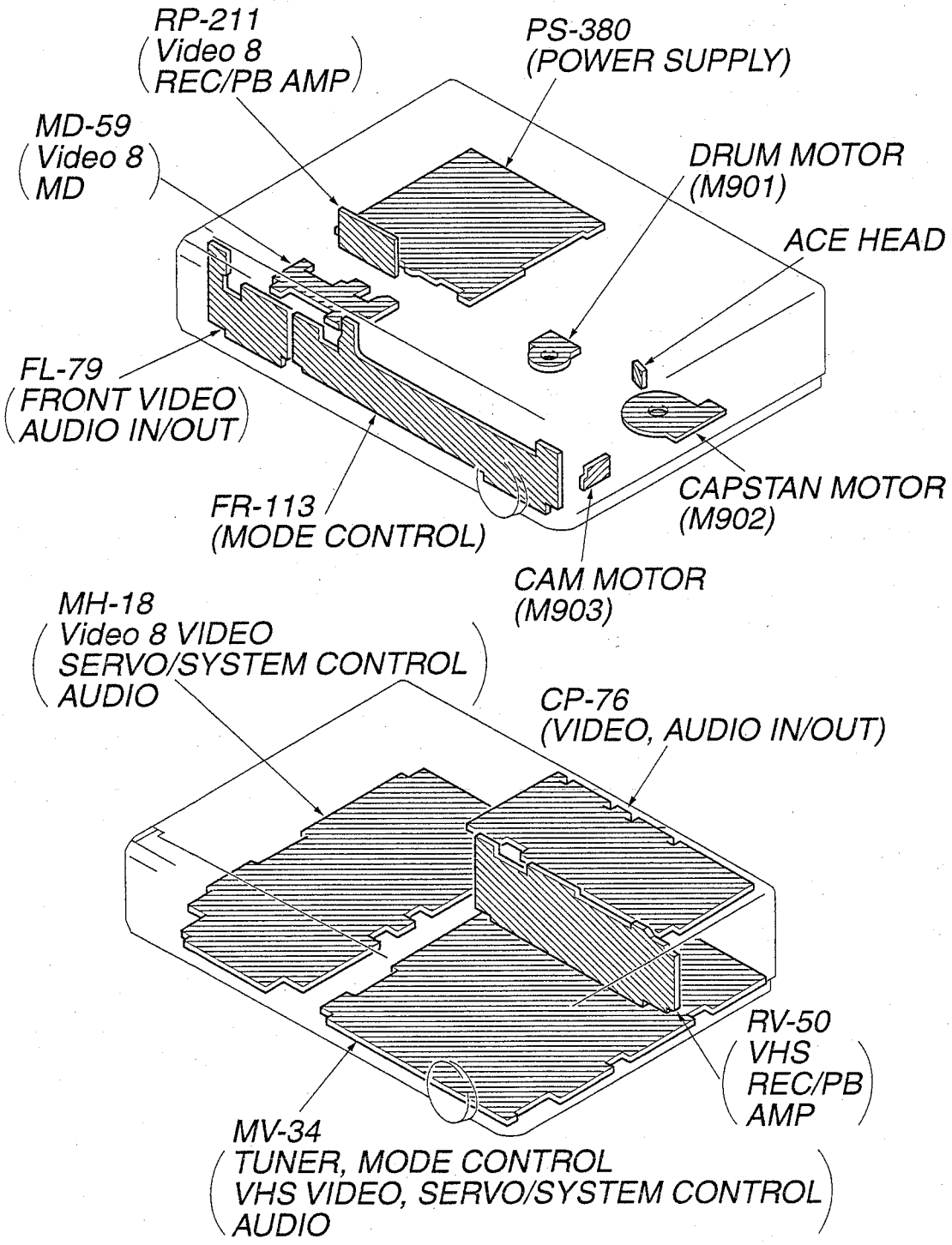

SECTION 3
BLOCK DIAGRAMS

3-1. OVERALL BLOCK DIAGRAM

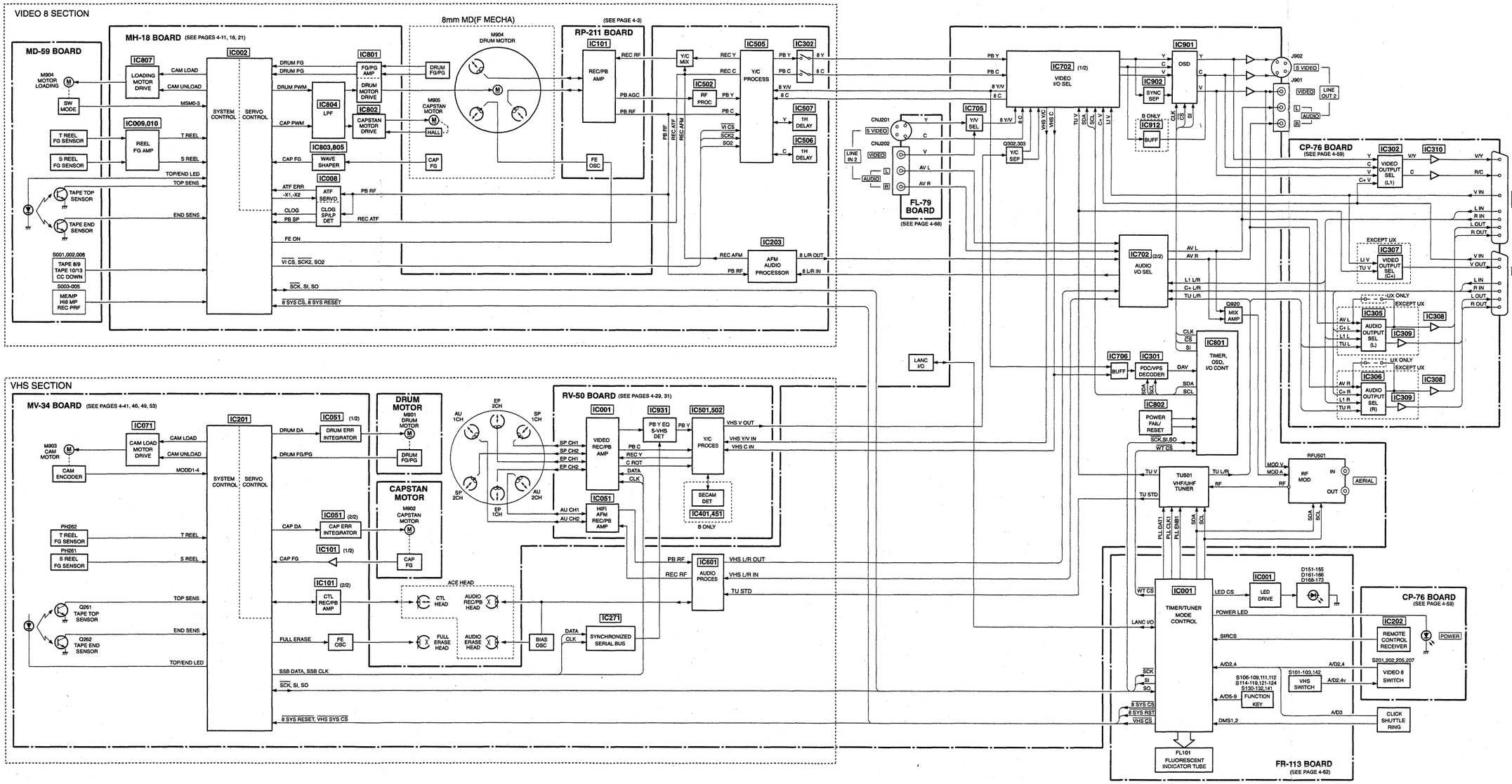

3-2. Video 8 VIDEO BLOCK DIAGRAM

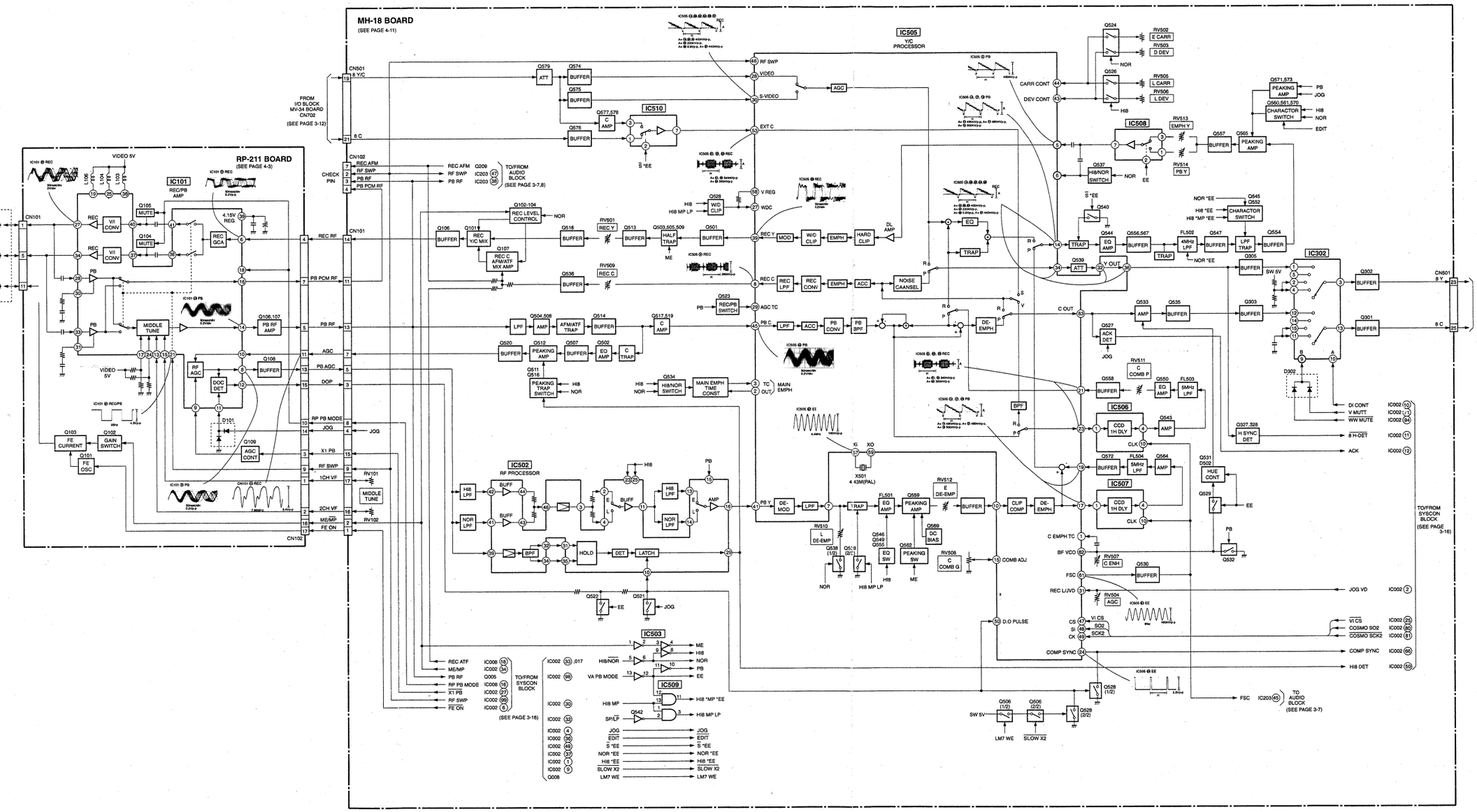

3-3. VHS VIDEO BLOCK DIAGRAM

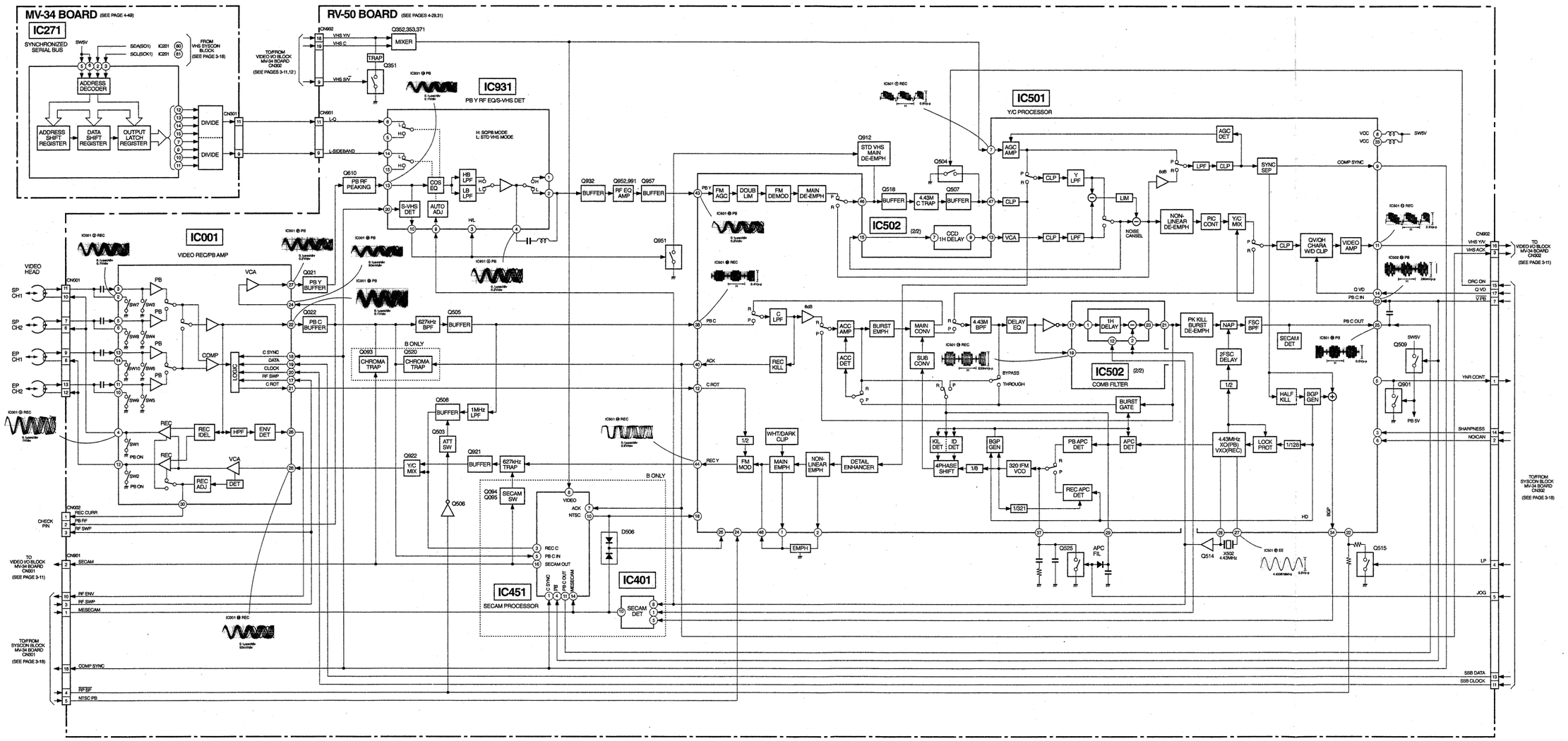

3-4. Video 8 AUDIO BLOCK DIAGRAM

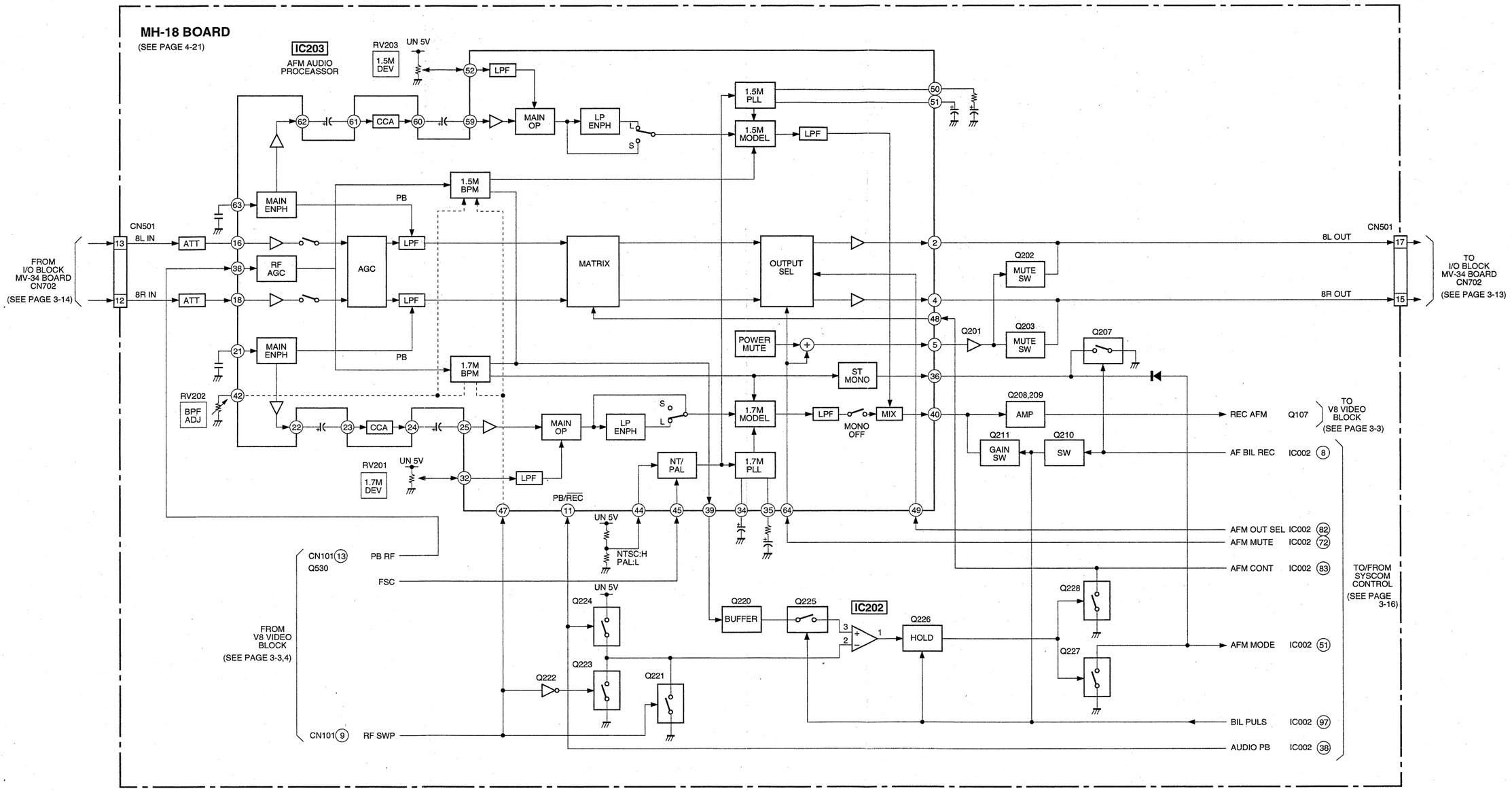

3-5. VHS AUDIO BLOCK DIAGRAM

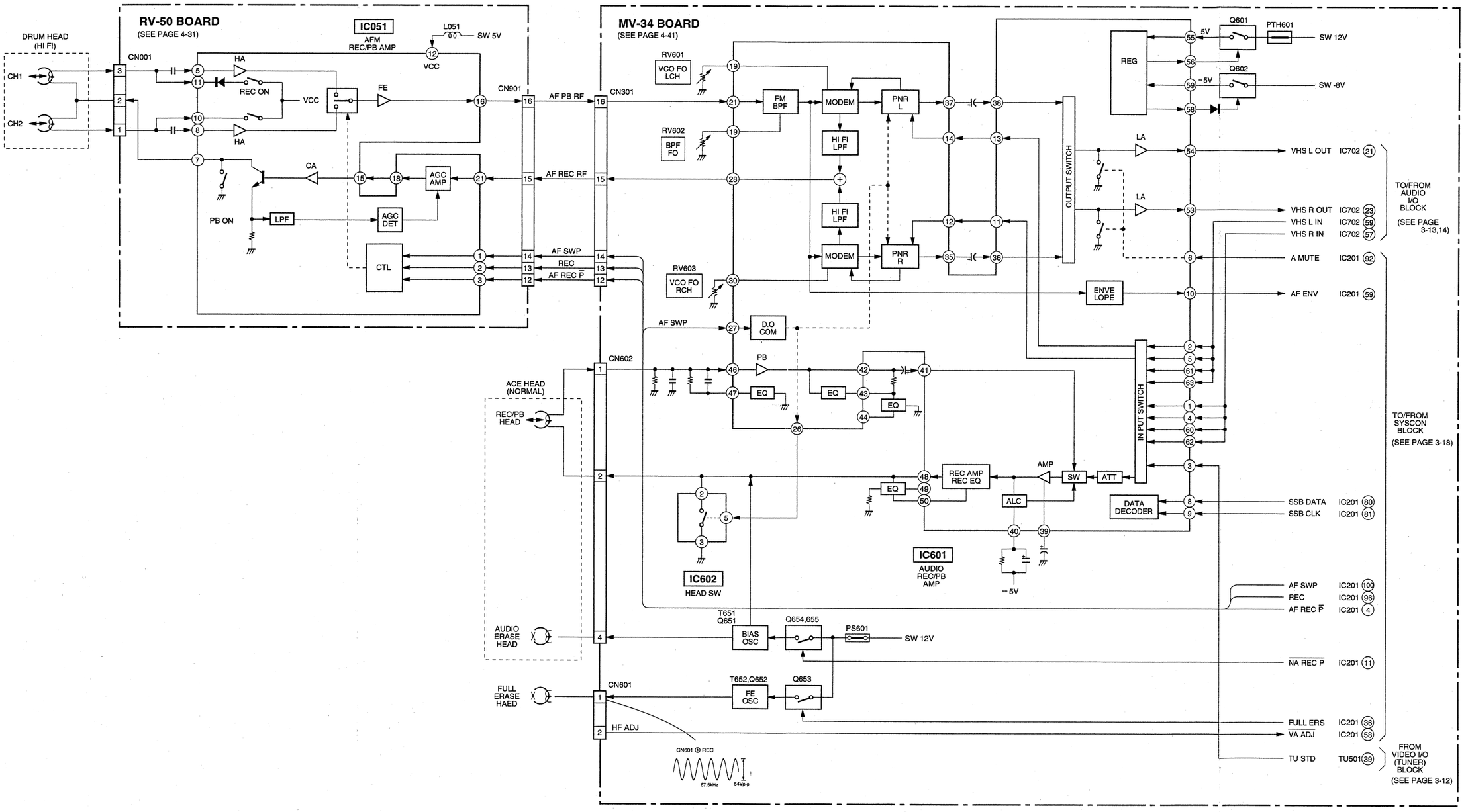

3-6. VIDEO IN/OUT BLOCK DIAGRAM

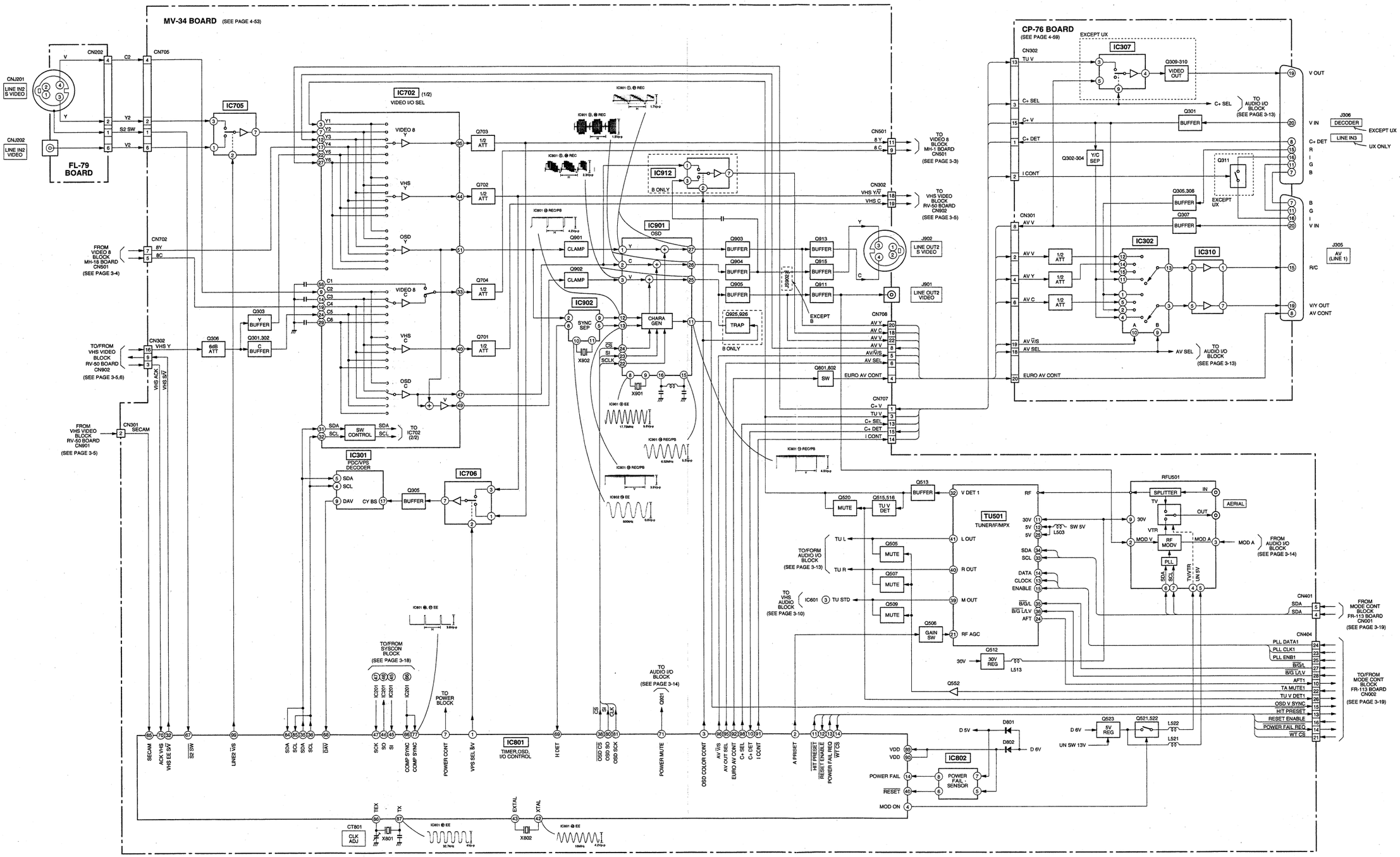

3-7. AUDIO IN/OUT BLOCK DIAGRAM

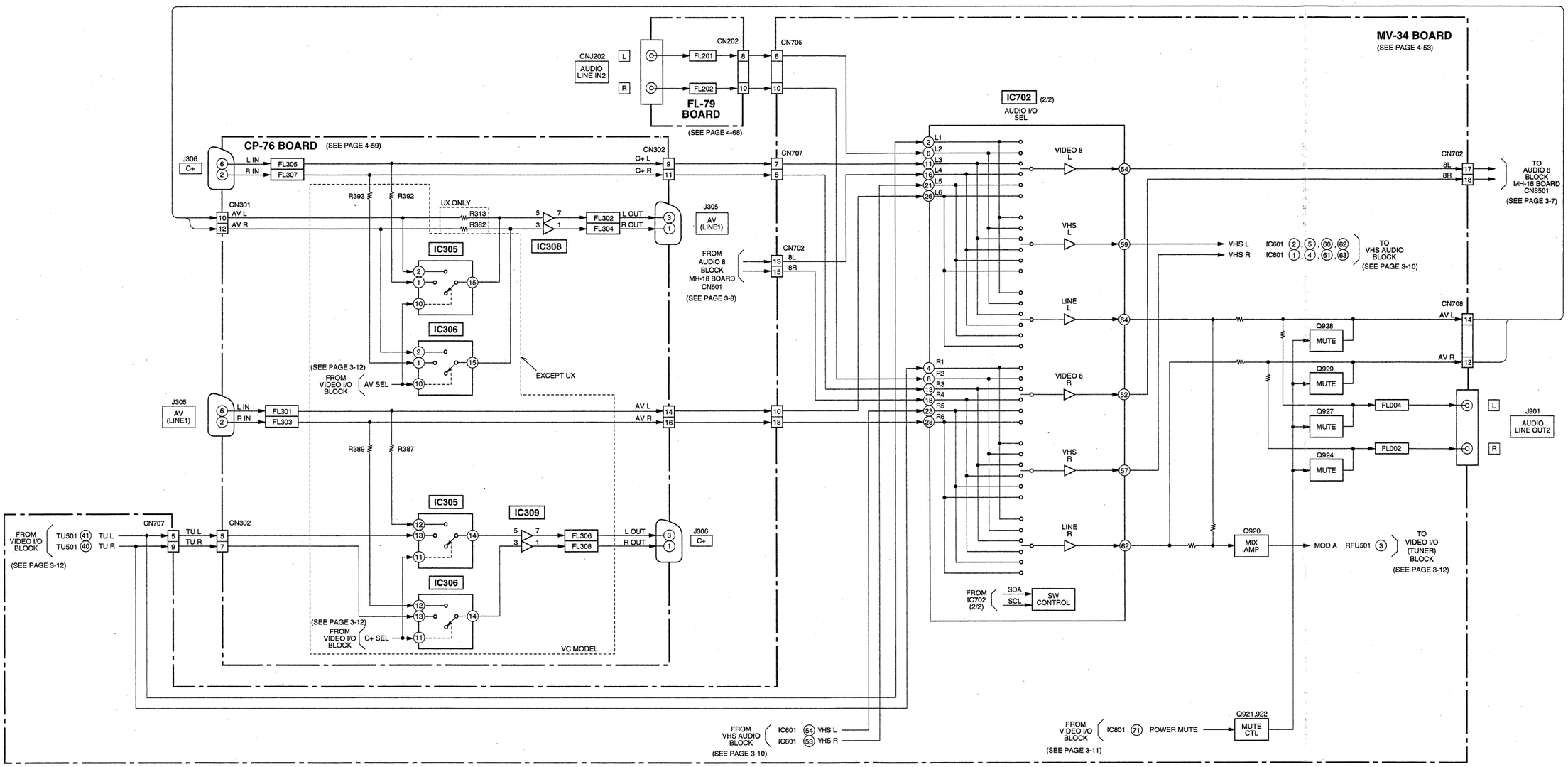

3-8. Video 8 SERVO/SYSTEM CONTROL BLOCK DIAGRAM

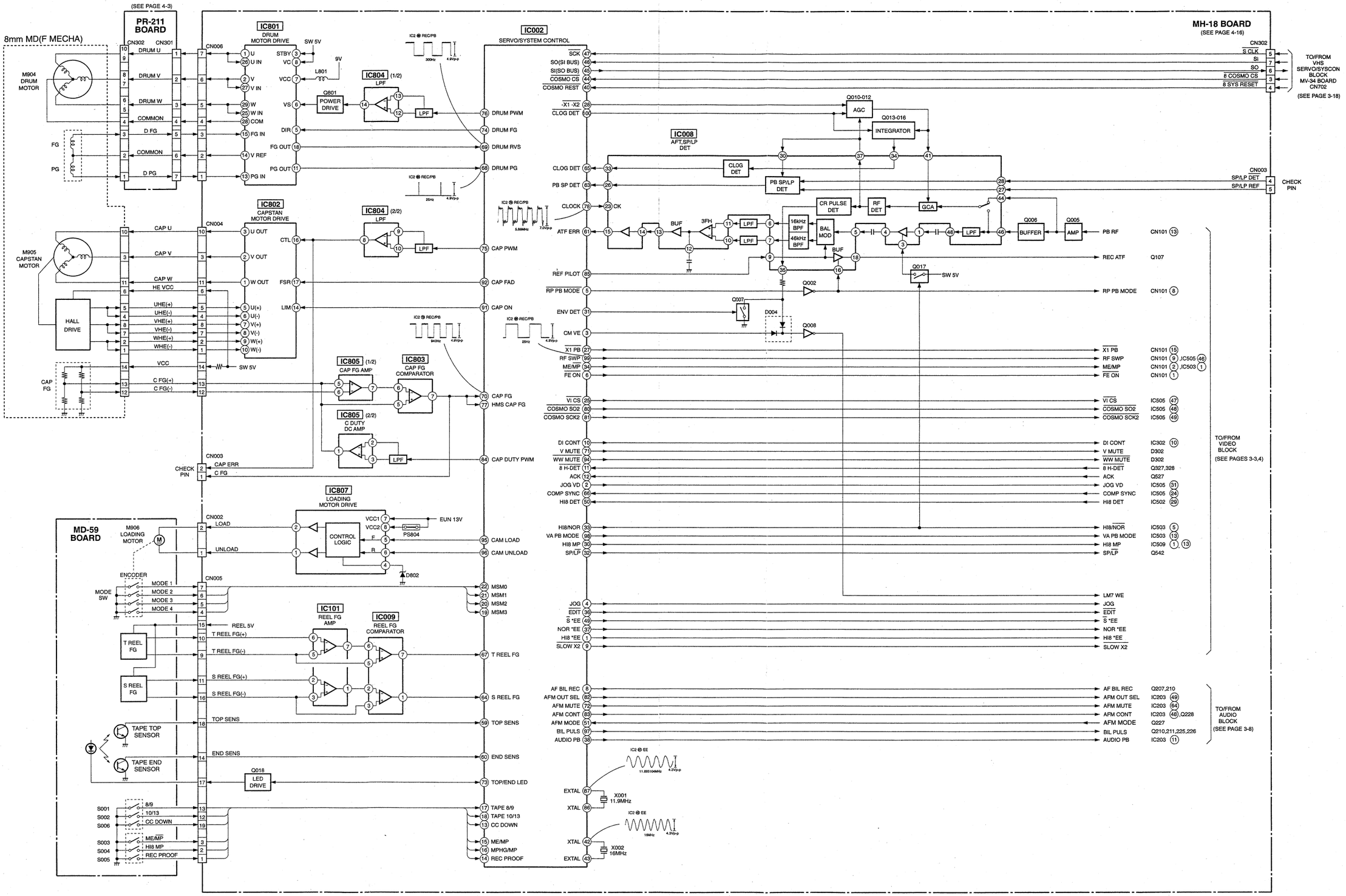

3-9. VHS SERVO/SYSTEM CONTROL BLOCK DIAGRAM

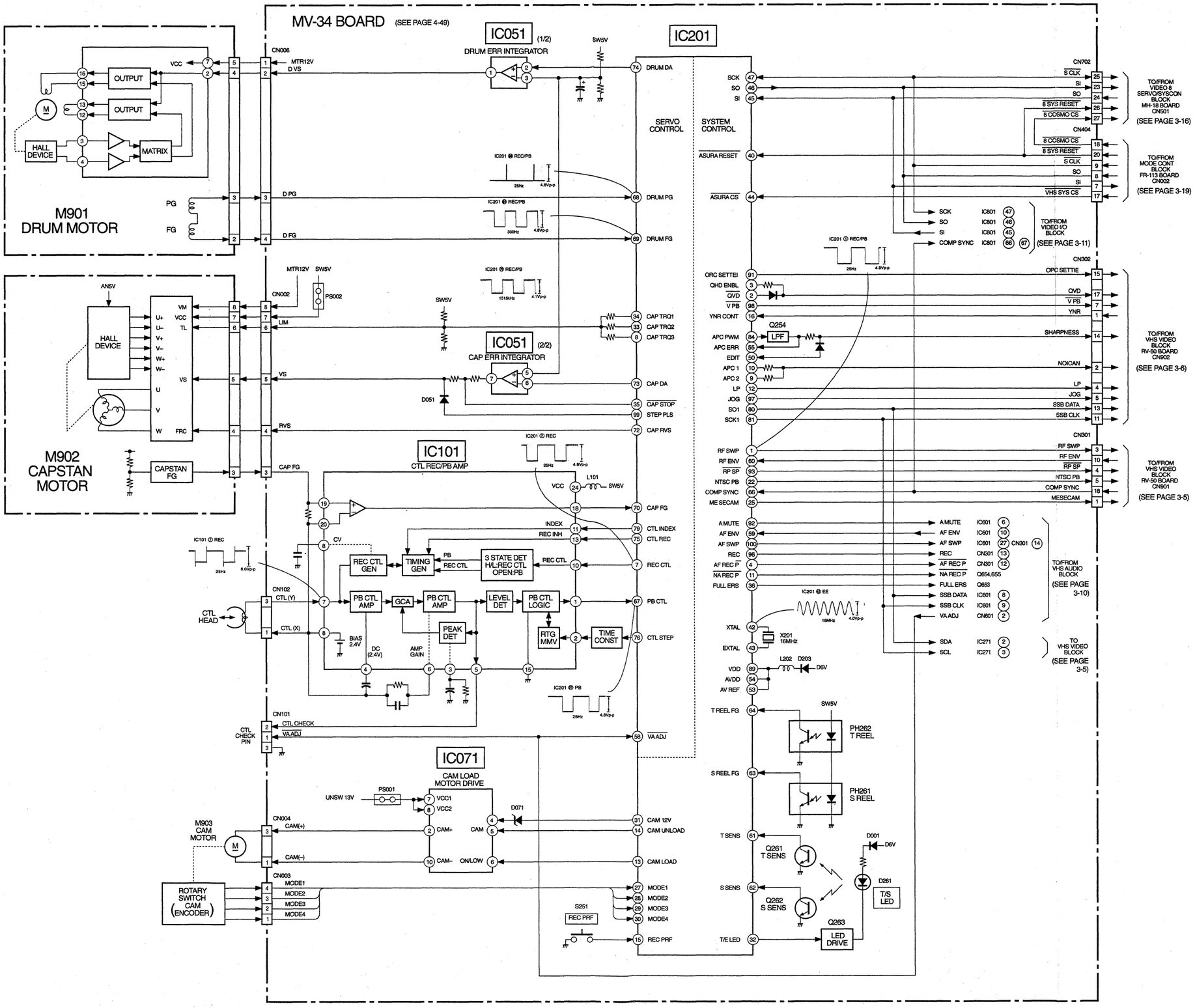

3-10. MODE CONTROL BLOCK DIAGRAM

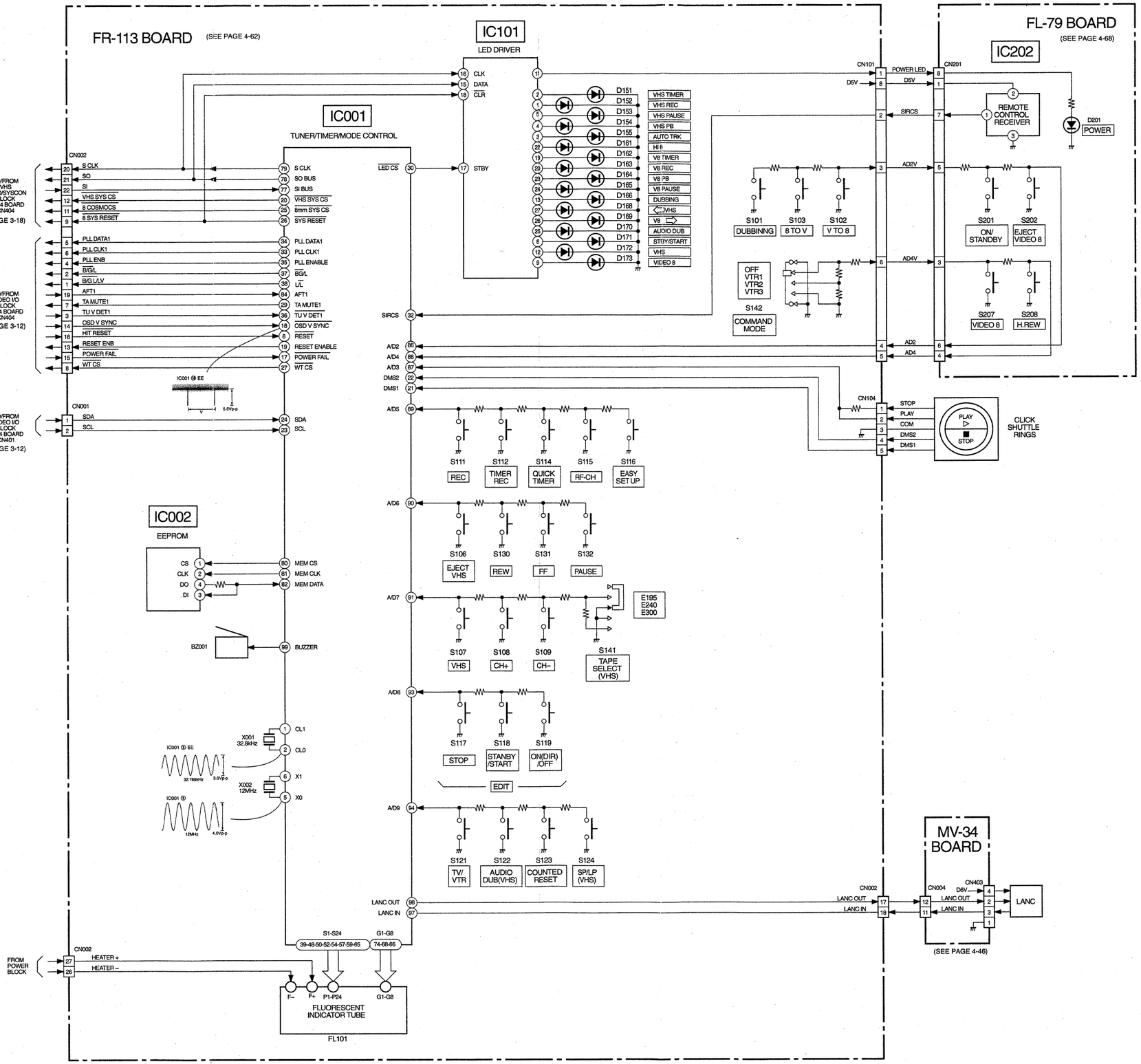

3-11. POWER SUPPLY BLOCK DIAGRAM

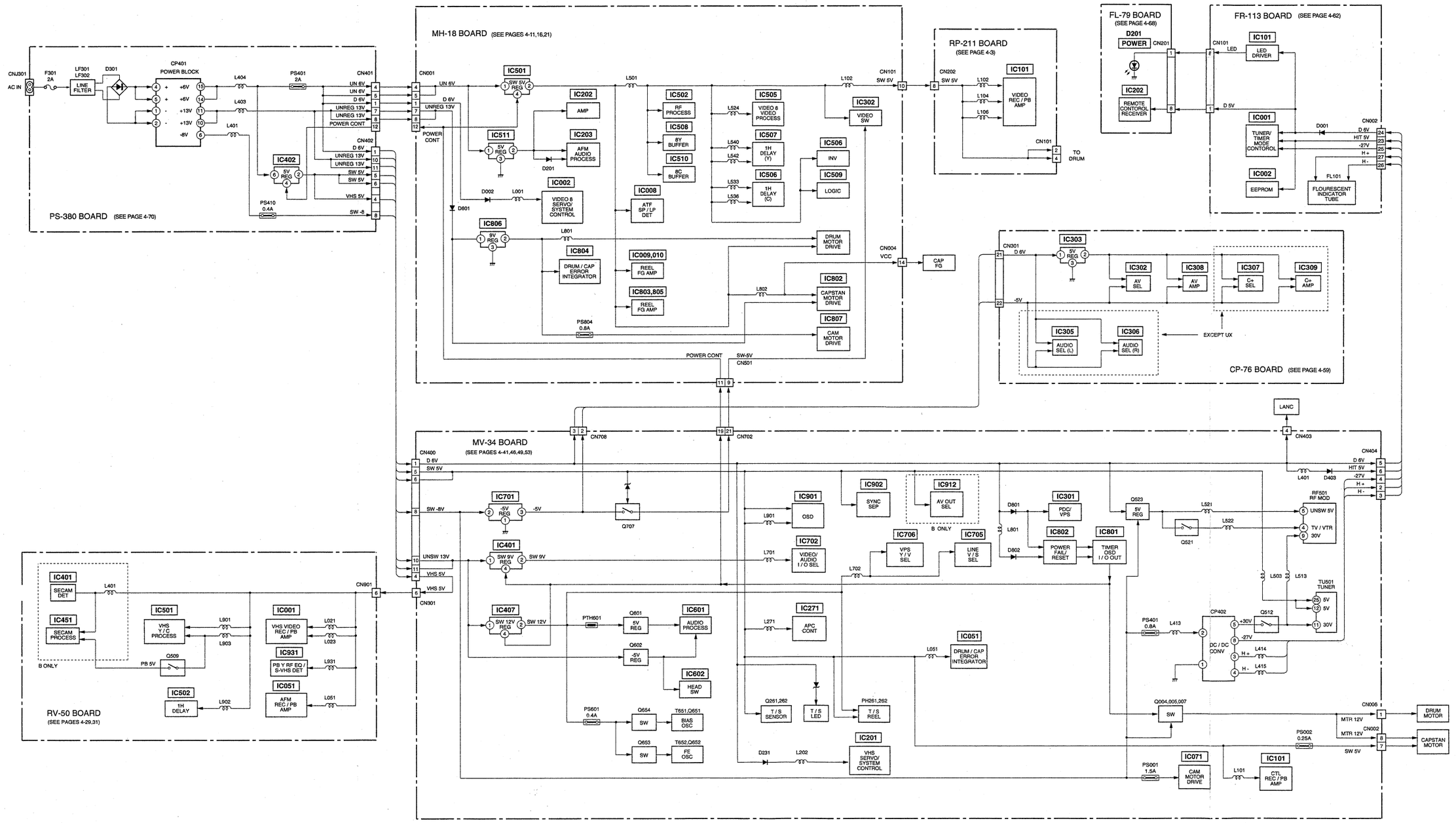

SECTION 4
PRINTED WIRING BOARDS AND SCHEMATIC DIAGRAMS

4-1. FRAME SCHEMATIC DIAGRAM

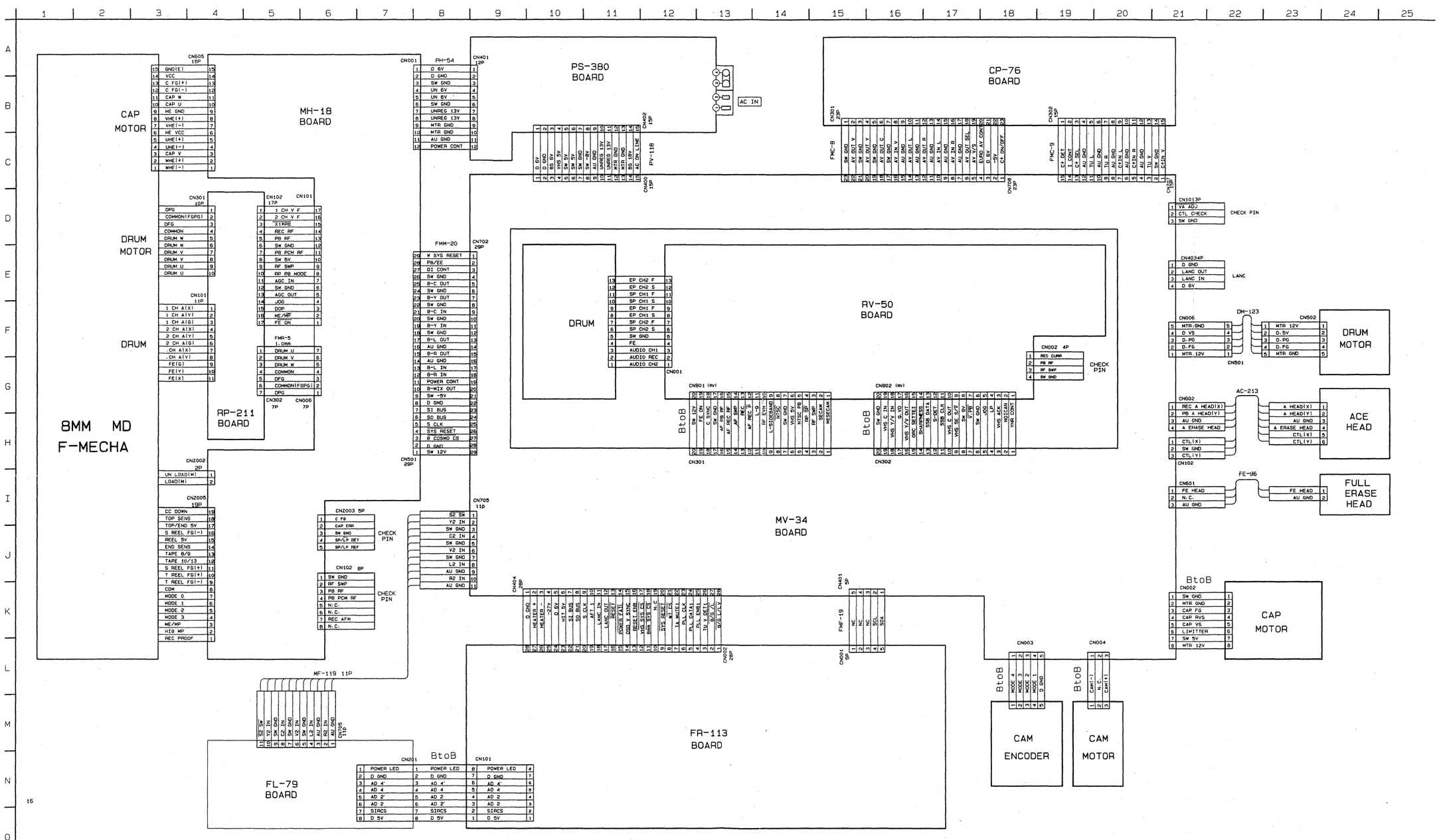

4-2. PRINTED WI

RP-211 (Video 8 REC/

— Ref. No. RP211- Boar

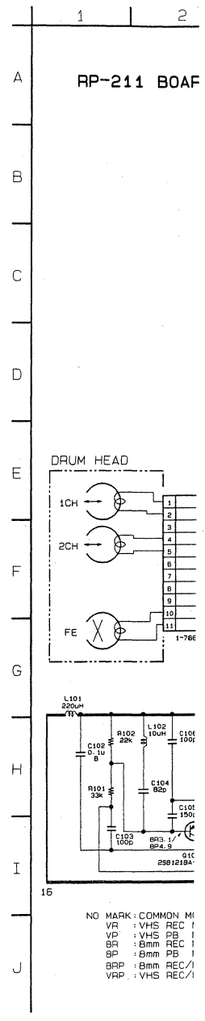

RP-211 BC

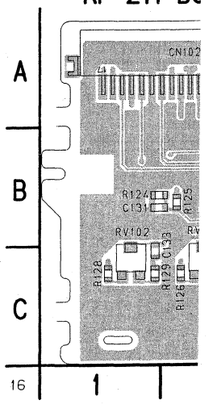

4-2. PRINTED WIRING BOARDS AND SCHEMATIC DIAGRAMS

RP-211 (Video 8 REC/PB AMP) PRINTED WIRING BOARD AND SCHEMATIC DIAGRAM

— Ref. No. RP211- Board; 1,000 Series —

There are few cases that the part printed on this diagram

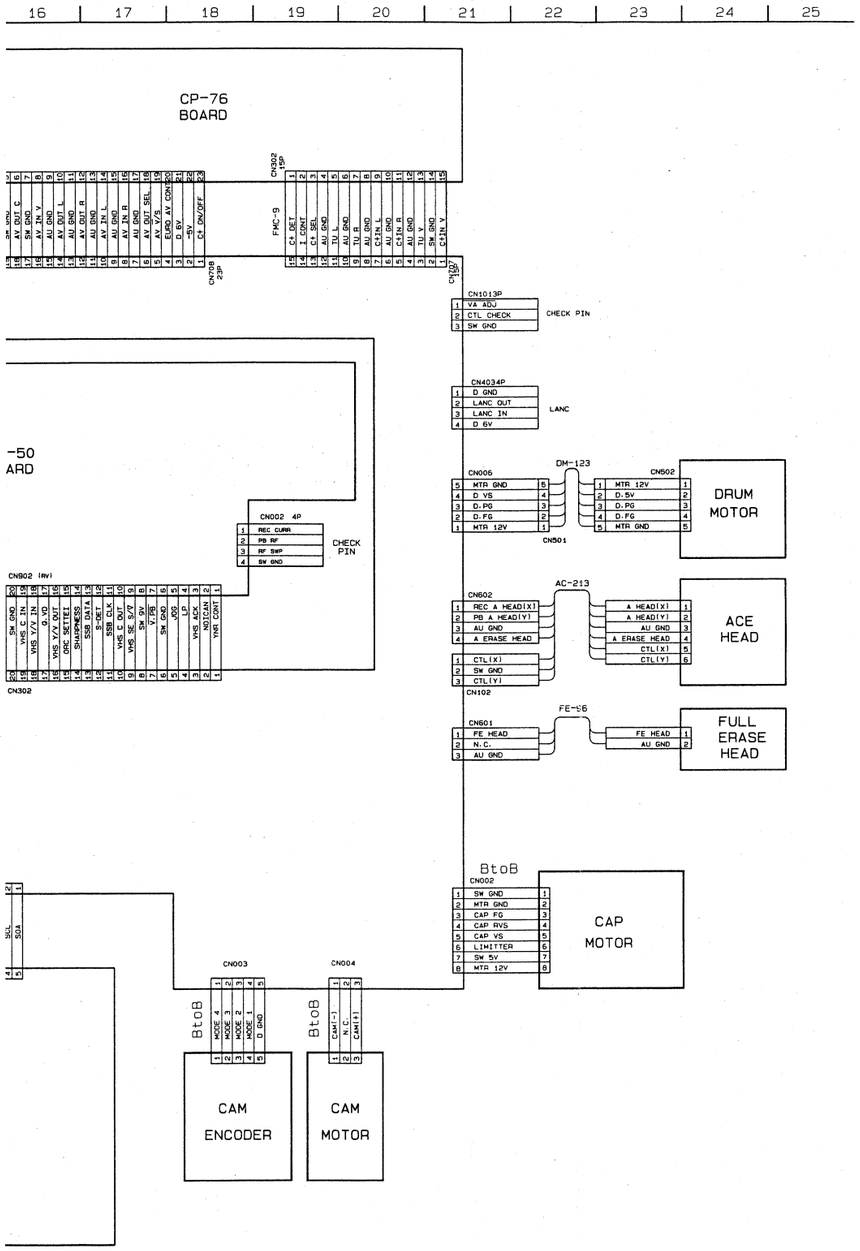

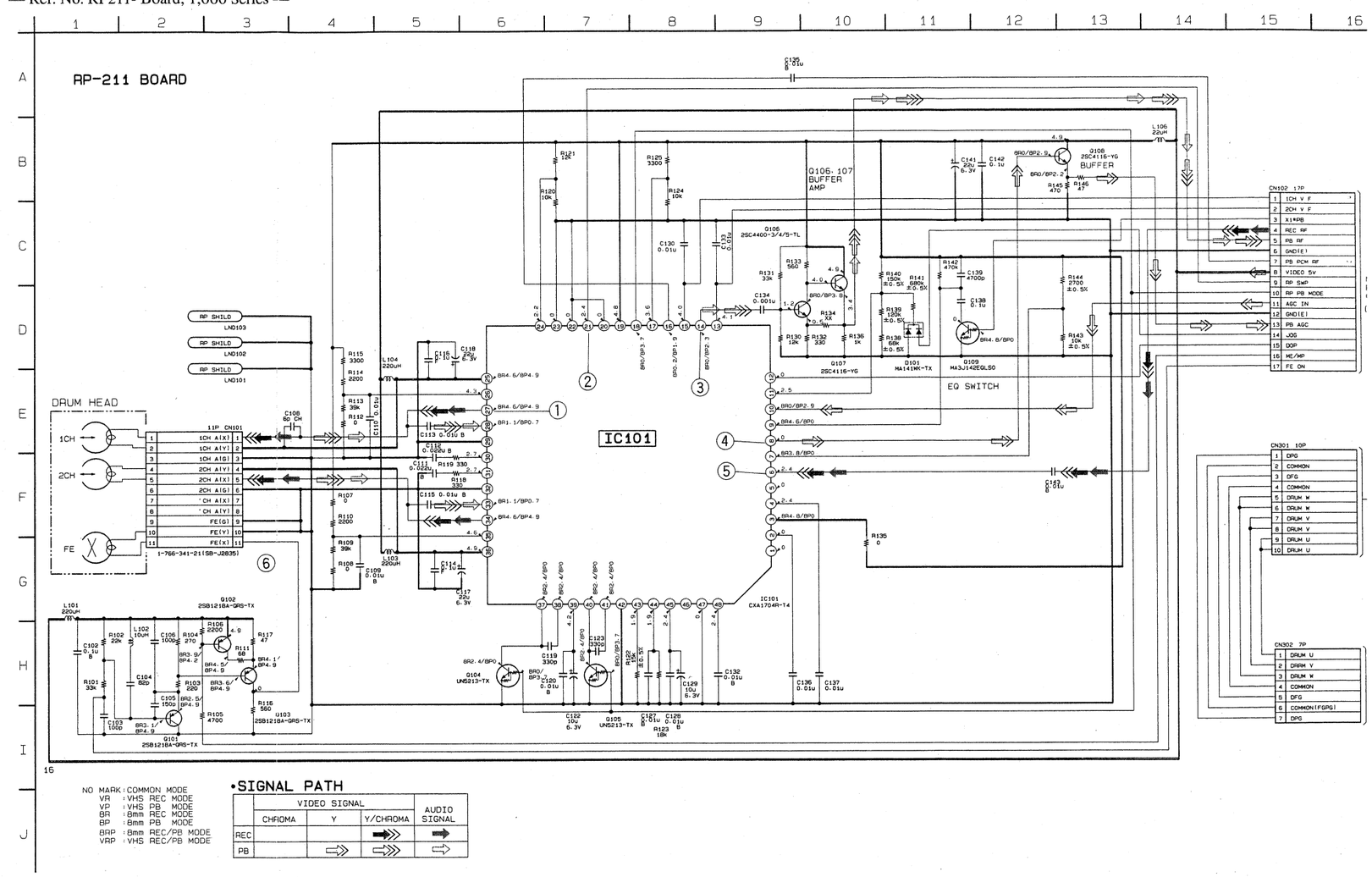

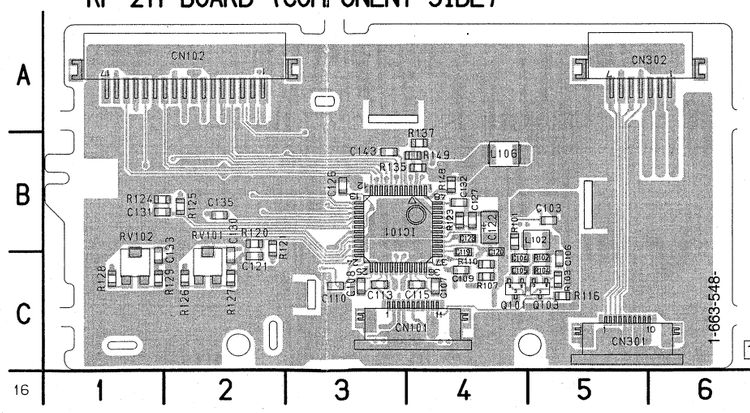

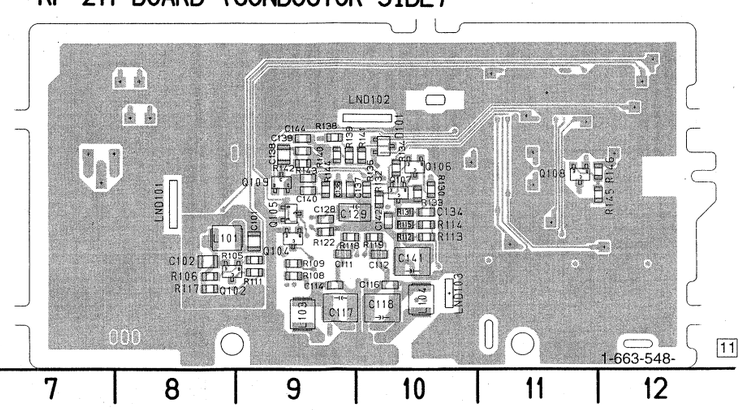

FRAME SCHEMATIC DIAGRAM

IC DIAGRAMS

SCHEMATIC DIAGRAM

There are few cases that the part printed on this diagram isn't mounted in this model.

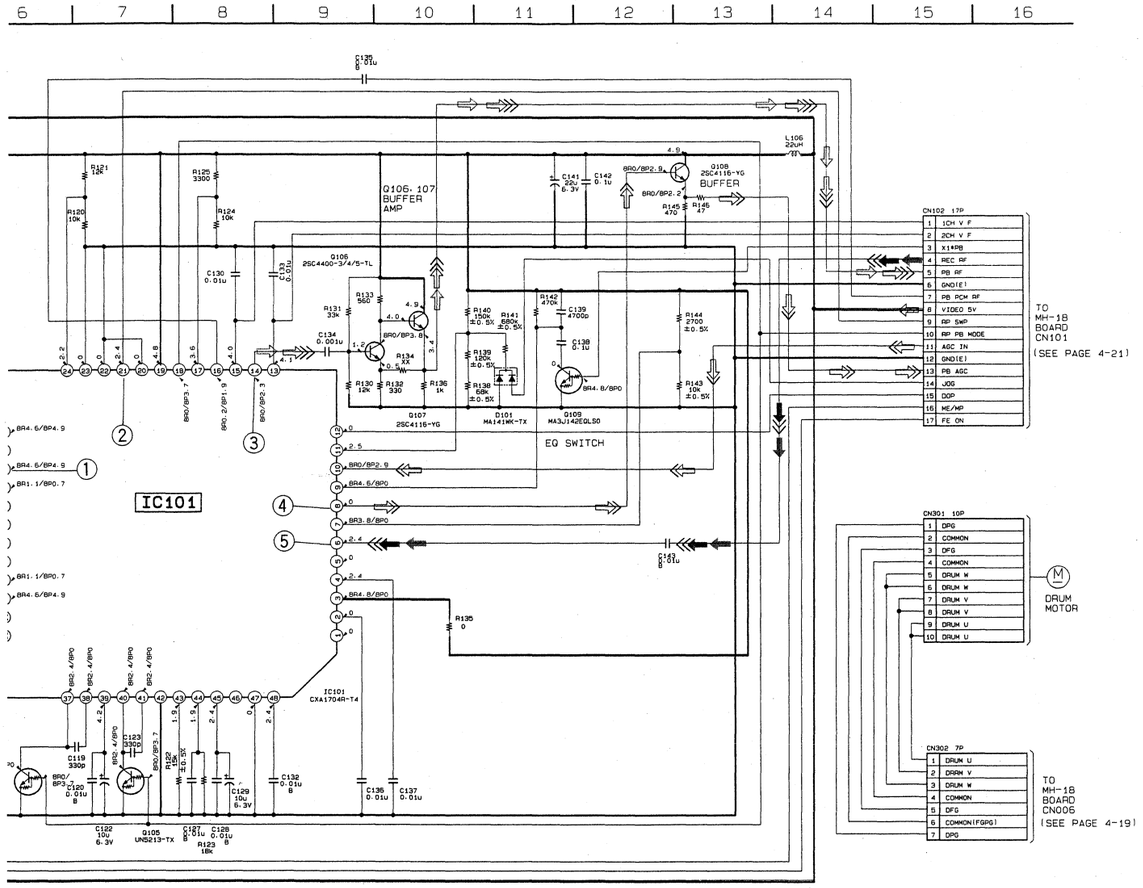

RP-211 BOARD (CONDUCTOR SIDE)

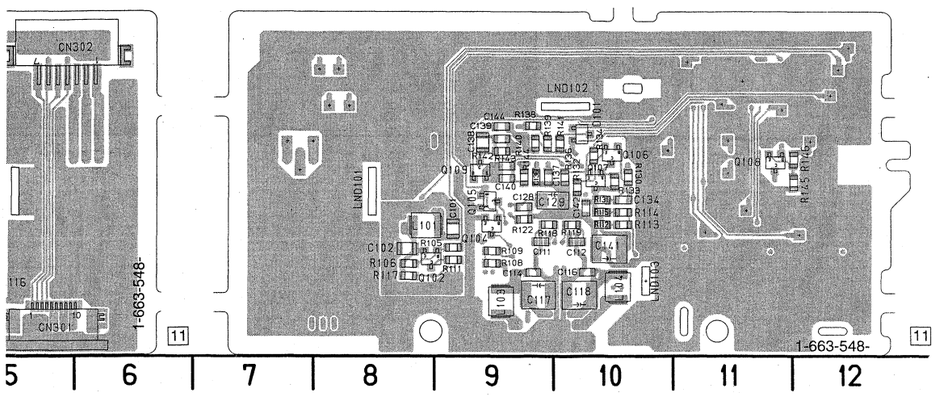

RP-211 BOARD

① IC101 ㉗ REC

50nsec/div
2V/div

② IC101 ㉑ REC/PB

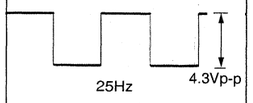

25Hz
4.3Vp-p

③ IC101 ⑭ PB

50nsec/div
0.2V/div

④ IC101 ⑧ PB

50nsec/div
0.2Vp-p

⑤ IC101 ⑥ REC

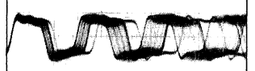

50nsec/div
0.2Vp-p

⑥ CN101 ⑪ REC

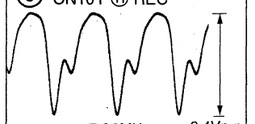

7.86MHz
8.4Vp-p

RP-211 BOARD

CN101	C-3
CN102	A-2
CN301	C-5
CN302	A-5
D101	B-10
IC101	B-3
Q101	C-4
Q102	C-8
Q103	C-5
Q104	B-9
Q105	B-9
Q106	B-10
Q107	B-10
Q108	B-11
Q109	B-9

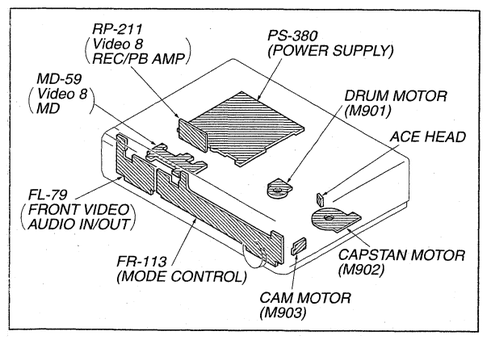

THIS NOTE IS COMMON FOR PRINTED WIRING BOARDS AND SCHEMATIC DIAGRAMS. (In addition to this, the necessary note is printed in each block.)

- **For printed wiring boards.**
- ▬▬ : Pattern from the side which enables seeing.

Caution :	
Pattern face side: (Conductor Side)	Parts on the pattern face side seen from the pattern face are indicated.
Pattern face side: (Component Side)	parts on the parts face side seen from the parts face are indicated.

- **For schematic diagrams.**
- Caution when replacing chip parts. New parts must be attached after removal of chip. Be careful not to heat the minus side of tantalum capacitor, because it is damaged by the heat.
- All resistor are in ohms, 1/4W unless otherwise noted. Chip resistor are 1/10W unless otherwise noted. kΩ: 1000Ω, MΩ, : 1000kΩ.
- All capacitors are in μF unless otherwise noted. pF : μμF. 50V or less are not indicated except for electrolytics and tantalums.
- ▭ : panel designation.
- △ : internal component.
- ▬ : B+Line. *
- ▬▬ : B+Line. *
- ⇒ : IN/OUT direction of (+,–) B LINE. *
- Circled numbers refer to waveforms. *
- Readings are taken with a PAL color-bar signal input.
- Voltage are dc between ground and measurement points.*
- Readings are taken with a digital multimeter (DC10MΩ).*
- Voltage variations may be noted due to normal production tolerances.*

When indicating parts by reference number, please include the board name.

- * : indicated by the color red.

MH-18 (Video 8 VIDEO, SERVO/SYSTEM CONTROL, AUDIO) PRINTED WIRING BOARD
— Ref. No. MH-18 Board; 2,000 Series —

There are few cases that the part printed on this diagram isn't mounted in this model.

MH-18 BOARD

CN001	E-32	Q014	H-2	Q522	D-28
CN002	J-32	Q015	G-3	Q523	D-29
CN003	J-32	Q016	G-39	Q524	H-11
CN004	J-35	Q017	E-3	Q525	D-12
CN005	J-39	Q018	I-38	Q526	G-11
CN006	G-10	Q101	B-8	Q527	H-12
CN101	C-10	Q102	C-7	Q528	D-13
CN102	B-35	Q103	C-8	Q530	G-13
CN501	J-24	Q104	C-8	Q532	F-28
		Q106	C-9	Q533	H-29
D002	I-40	Q107	B-8	Q534	F-13
D004	H-3	Q201	I-19	Q535	H-29
D005	H-39	Q202	I-19	Q536	F-14
D201	H-19	Q203	J-19	Q537	F-28
D202	H-24	Q207	H-23	Q538	C-13
D301	G-25	Q208	H-17	Q539	E-11
D302	H-1	Q209	H-17	Q540	I-14
D502	G-28	Q210	H-16	Q541	B-27
D801	G-35	Q211	H-16	Q542	H-27
D802	H-35	Q220	H-24	Q543	D-27
		Q221	I-25	Q544	I-27
IC002	F-38	Q222	H-24	Q545	I-12
IC008	F-3	Q223	H-25	Q546	C-27
IC009	I-2	Q224	I-25	Q547	I-29
IC010	I-3	Q225	H-24	Q548	C-14
IC202	I-16	Q226	I-25	Q549	B-27
IC203	H-18	Q227	I-24	Q550	D-15
IC302	E-17	Q228	H-17	Q552	H-13
IC501	I-33	Q301	E-24	Q554	H-12
IC502	B-11	Q302	F-24	Q555	B-27
IC503	D-13	Q303	C-16	Q556	J-27
IC505	F-12	Q305	B-15	Q557	H-14
IC506	D-16	Q327	G-25	Q558	D-14
IC507	E-16	Q328	F-26	Q559	B-14
IC508	H-13	Q410	D-19	Q560	H-30
IC509	H-15	Q411	E-23	Q561	I-29
IC510	G-15	Q501	B-13	Q562	B-27
IC511	H-21	Q502	E-31	Q563	B-14
IC801	I-4	Q503	B-28	Q564	E-14
IC802	I-35	Q504	G-30	Q565	H-13
IC803	I-5	Q505	B-29	Q567	I-13
IC804	G-4	Q506	C-11	Q569	B-14
IC805	J-5	Q507	E-31	Q570	I-30
IC806	F-6	Q508	G-11	Q571	J-29
IC807	H-35	Q509	B-28	Q572	D-27
		Q511	E-11	Q573	J-29
Q002	D-2	Q512	E-31	Q574	G-15
Q005	C-4	Q513	A-13	Q575	G-15
Q006	C-4	Q514	F-31	Q576	G-15
Q007	H-38	Q516	D-11	Q577	G-15
Q008	H-3	Q517	F-31	Q578	G-26
Q010	H-39	Q518	A-19	Q579	H-14
Q011	H-2	Q519	F-11	Q801	F-36
Q012	H-38	Q520	D-31		
Q013	H-39	Q521	F-29		

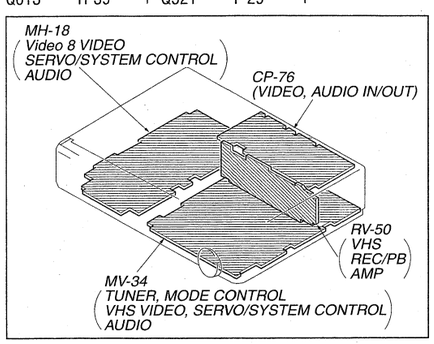

MH-18 BOARD (COMPONENT SIDE)

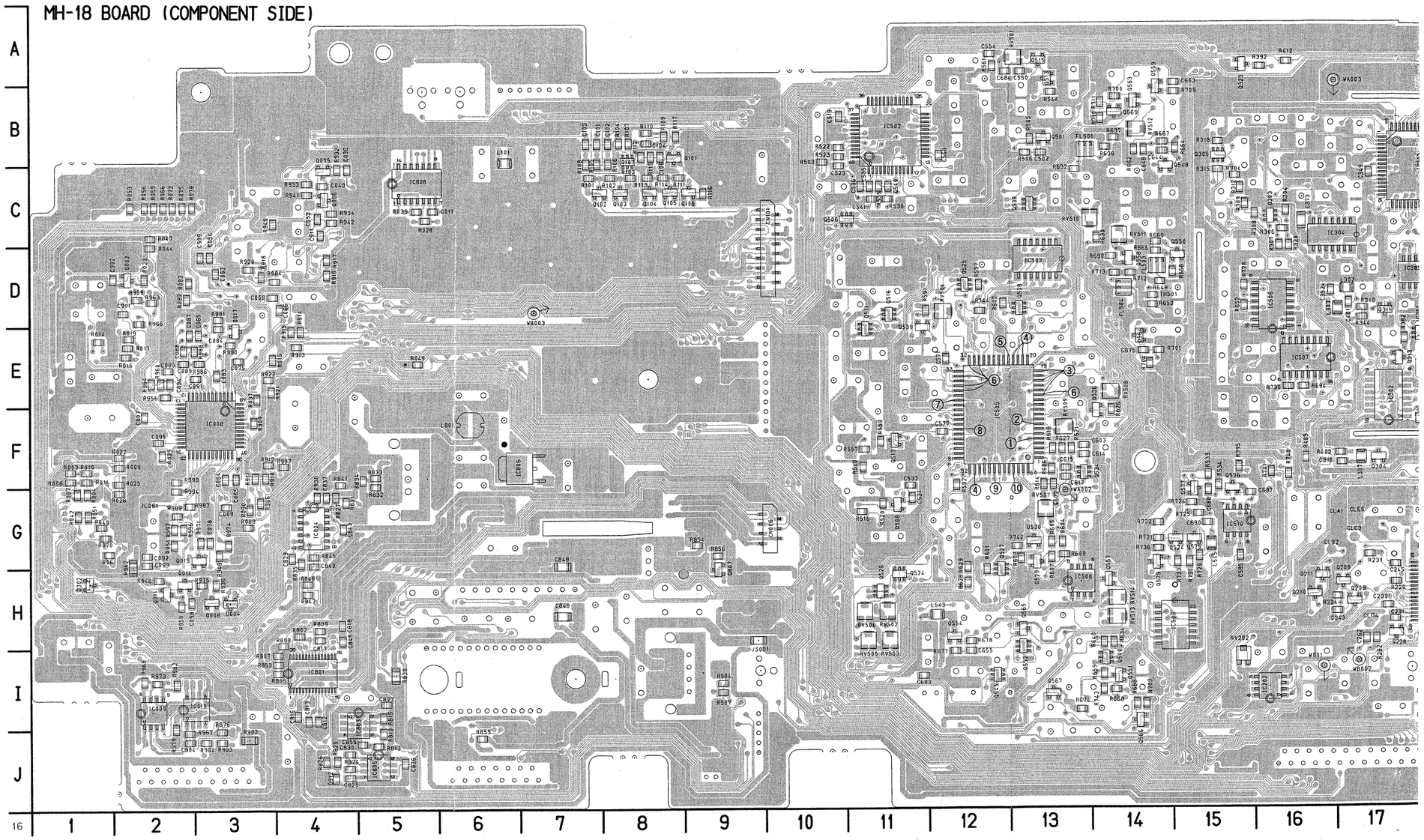

nted on this diagram isn't mounted in this model.

MH-18 BOARD (CONDUCTOR SIDE)

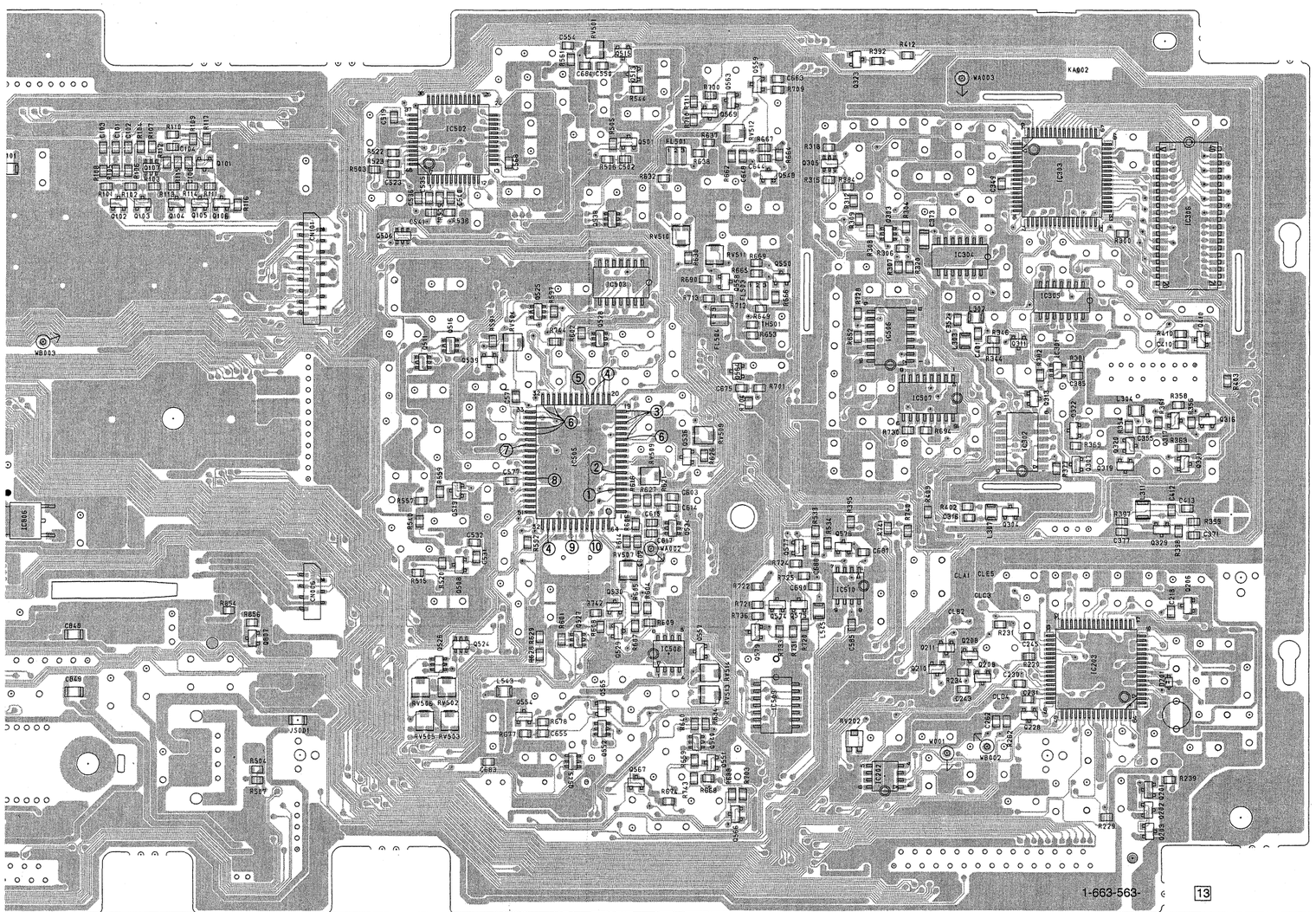

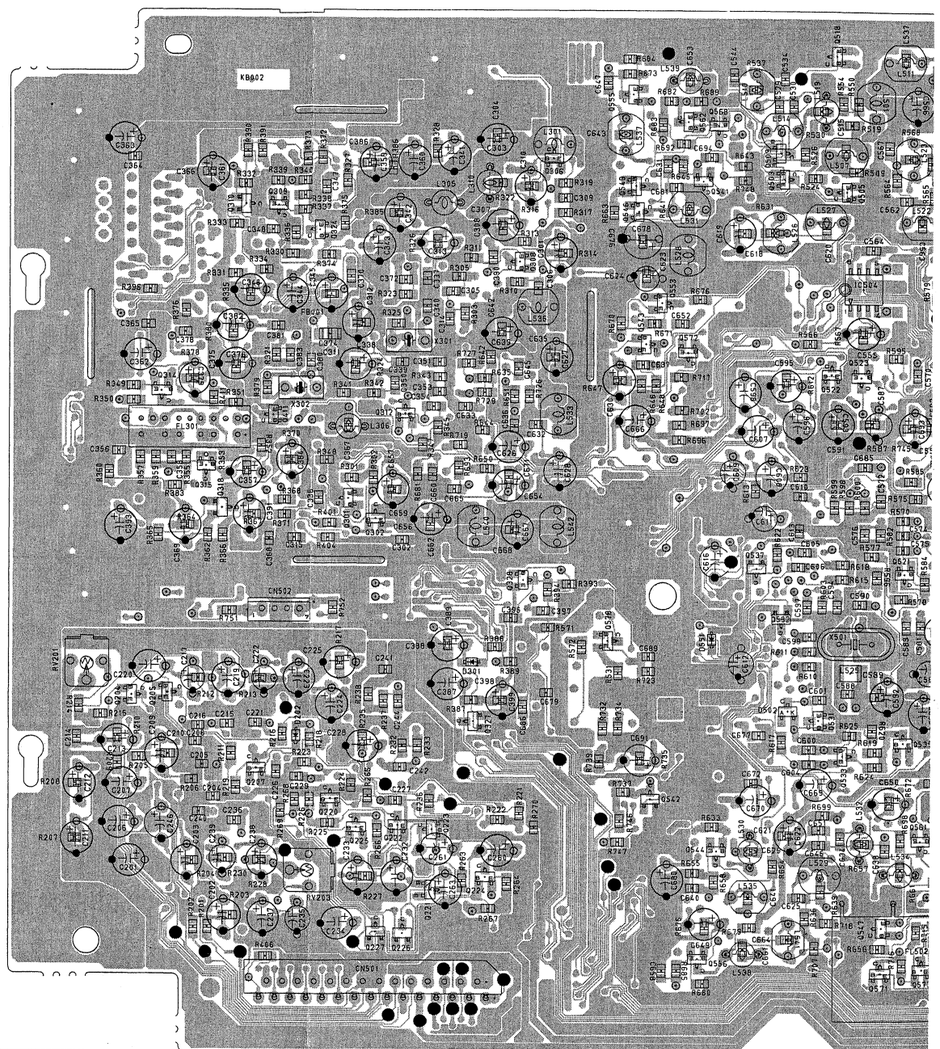

1-663-563-

13

7 8 9 10 11 12 13 14 15 16 17 18 19 20 21 22 23 24 25 26 27 28 29

18 BOARD (CONDUCTOR SIDE)

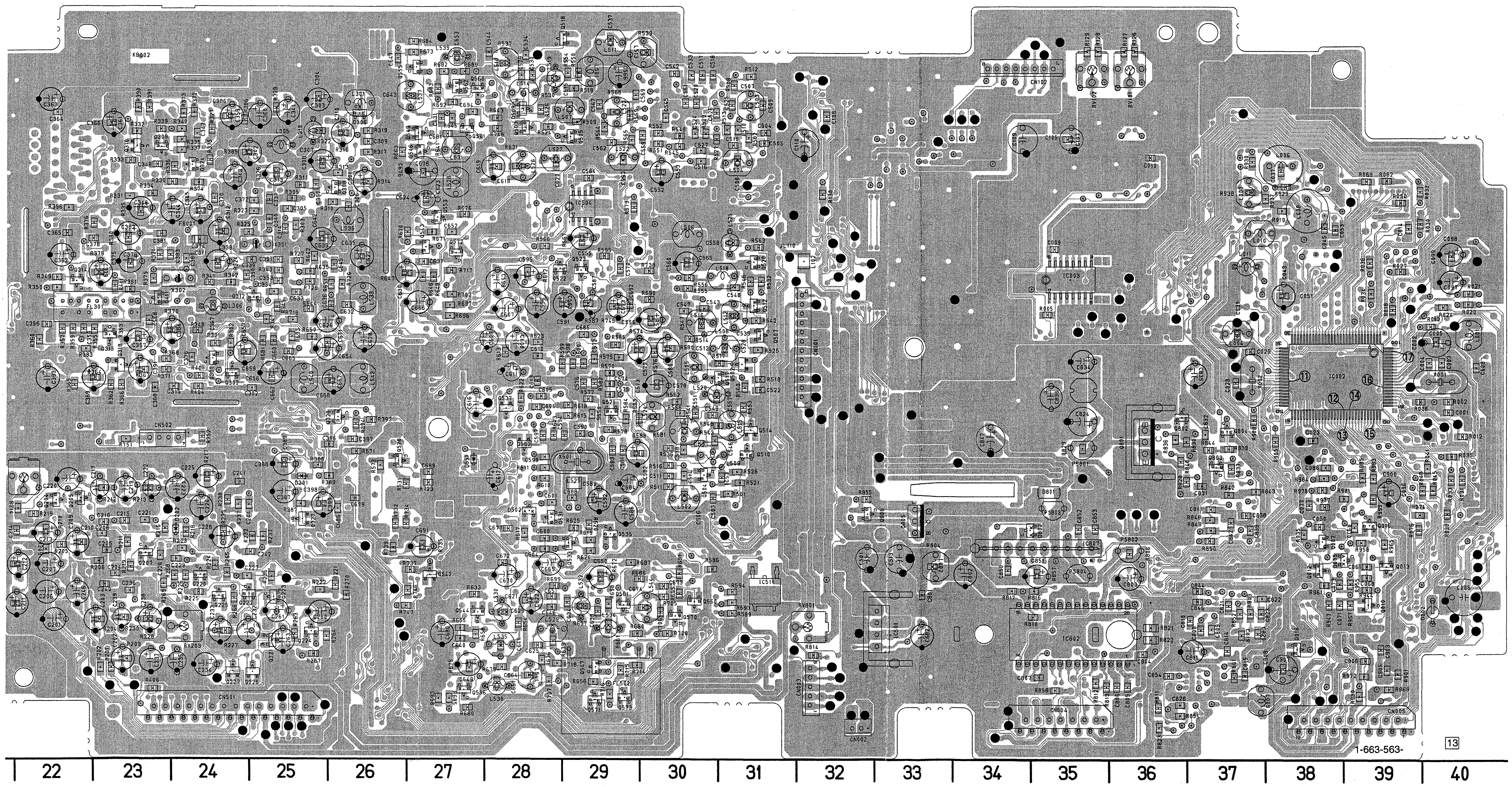

MH-18 (Video 8 VIDEO) SCHEMATIC DIAGRAM
— Ref. No. MH-18 Board; 2,000 Series —

• See page 4-6 for MH-18 BOARD printed wiring board.

MH-18 BOARD (1/5)
(VIDEO)

IC501 REG.

IC511 REG.

IC509

TO MV-34 BOARD CN702 (SEE PAGE 4-53)

TO (1) (3/5) (SEE PAGE 4-22)

TO (4) (5/5) (SEE PAGE 4-24)

TO (5) (4/5) (SEE PAGE 4-22, 4-24)

TO (11) (4/5) (SEE PAGE 4-16)

TO (10) (3/5) (SEE PAGE 4-16)

TO (11) (2/5) (SEE PAGE 4-16)

TO (8) (2/5) (SEE PAGE 4-16)

MH-18 BOARD (1/2)

① IC505 ⑤ PB
490mVp-p
H

⑥ IC505 ⑭,㉚,㉜,㉞,㊱,㊲ REC
A
H
A= ⑭,㉚,㉞ 400mVp-p,
A= ㉜ 220mVp-p,
A= ㊱ 0.9Vp-p, A= ㊲ 440mVp-p

② IC505 ⑧ REC
380mVp-p
H

⑦ IC505 ㊴ REC
50nsec/div
0.2V/div

③ IC505 ⑭, ⑰, ⑲ PB
A
H
A= ⑭ 490mVp-p, A= ⑰ 480mVp-p,
A= ⑲ 500mVp-p

⑧ IC505 ㊺ PB
50nsec/div
0.2V/div

④ IC505 ㉑, ㉓, ㊸ REC
A
H
A= ㉑, ㉓ 340mVp-p
A= ㊸ 350mVp-p

⑨ IC505 ㊼ EE
4.4MHz
160mVp-p

⑤ IC505 ㉔ EE
2.5Vp-p
H

⑩ IC505 ㊶ EE
8fsc
480mVp-p

•SIGNAL PATH

			PB
			REC
	CHROMA	Y	Y/CHR
VIDEO SIGNAL			

NO MARK: COMMON MODE
VP : VHS REC/PB MODE
VR : VHS REC MODE
SD : 8mm REC/PB MODE
SP : 8mm PB MODE
SR : 8mm REC MODE

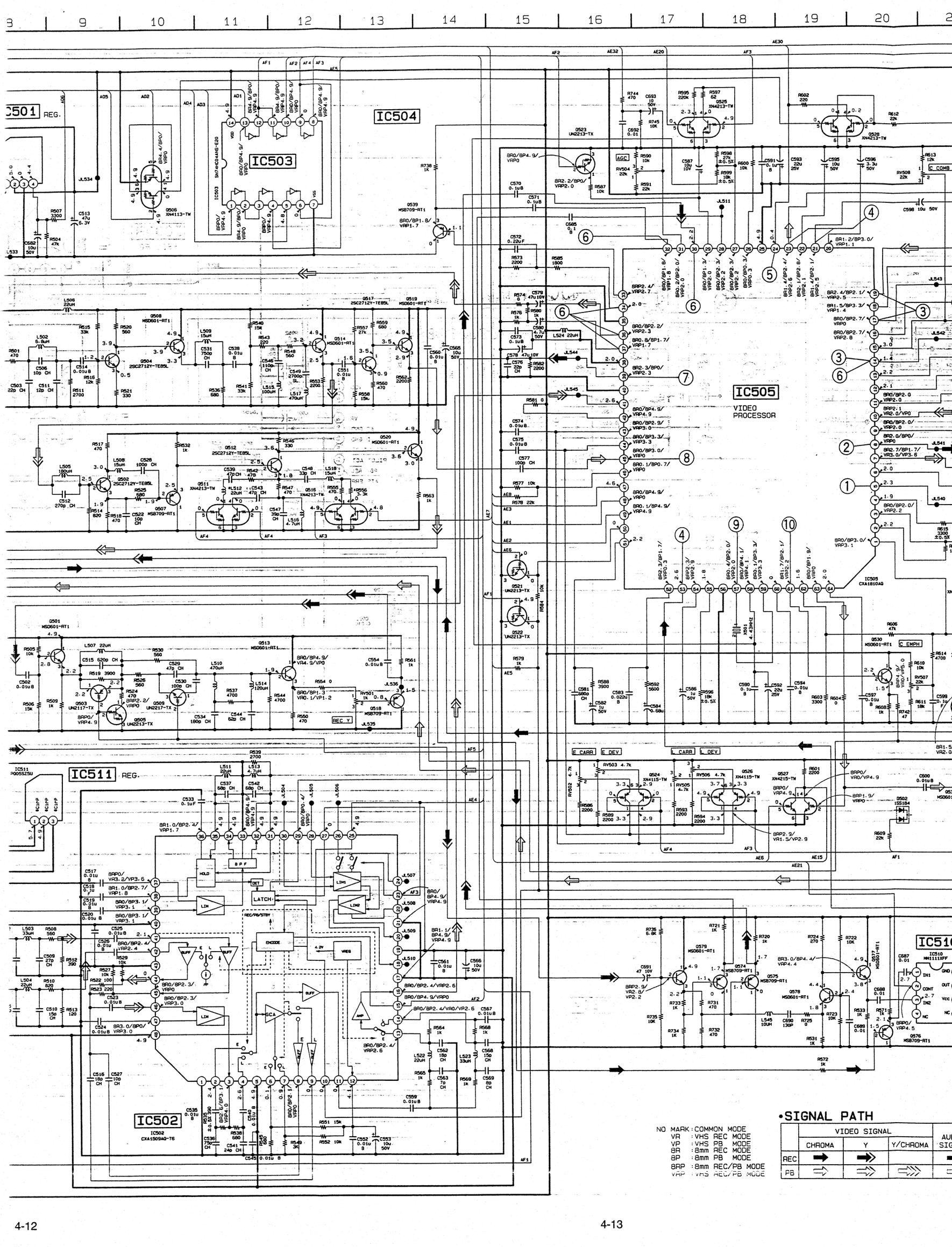

NO MARK : COMMON MODE
VR : VHS REC MODE
VP : VHS PB MODE
8R : 8mm REC MODE
8P : 8mm PB MODE
8RP : 8mm REC/PB MODE
VRP : VHS REC/PB MODE

•SIGNAL PATH

	VIDEO SIGNAL			AU SIG
	CHROMA	Y	Y/CHROMA	
REC	➡	➡		■
PB	⇨	⇨	⇨	□

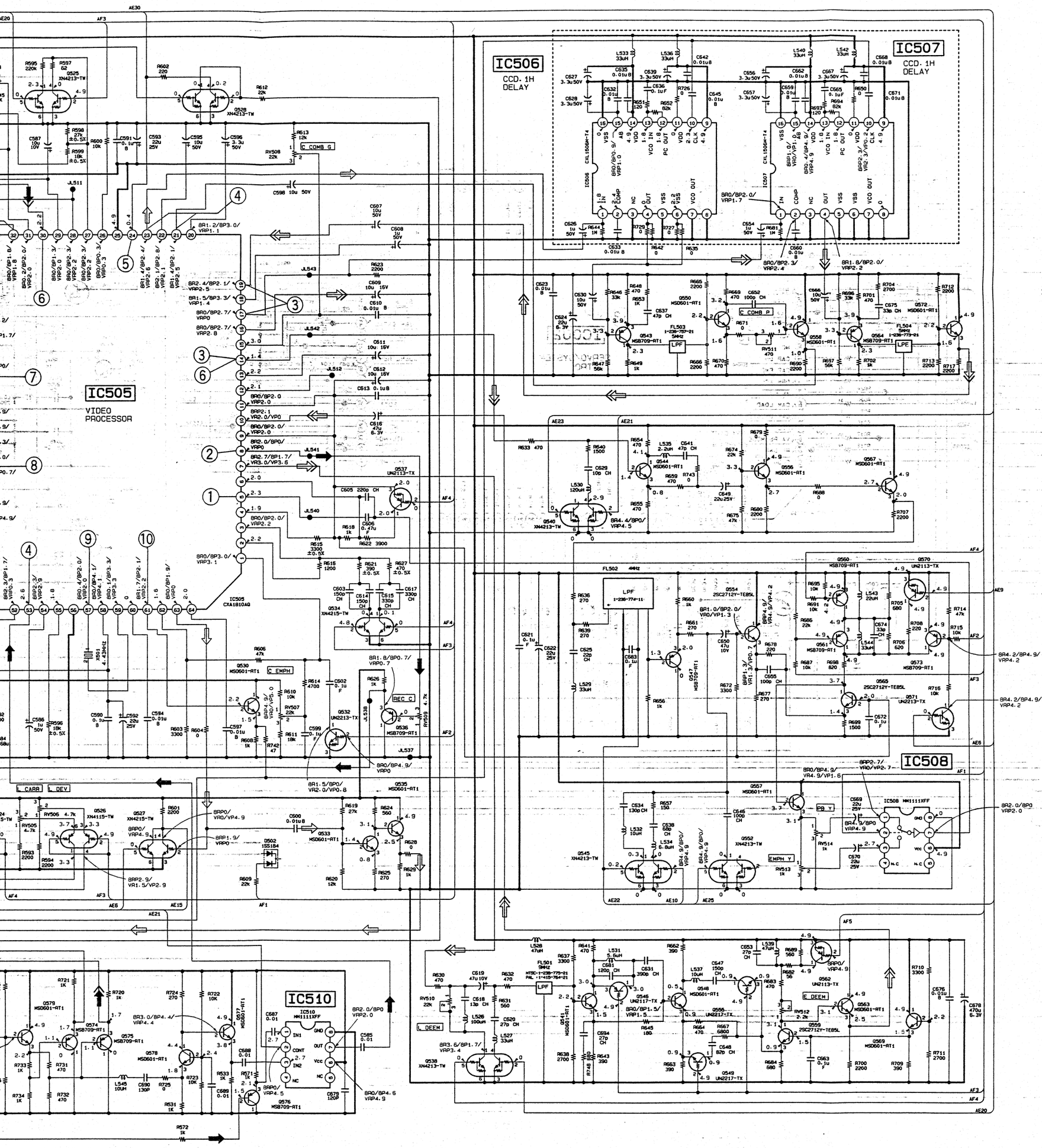

NO MARK : COMMON MODE
VR : VHS REC MODE
VP : VHS PB MODE
8R : 8mm REC MODE
8P : 8mm PB MODE
8RP : 8mm REC/PB MODE
VRP : VHS REC/PB MODE

•SIGNAL PATH

	VIDEO SIGNAL			AUDIO SIGNAL
	CHROMA	Y	Y/CHROMA	
REC	➡	➡		➡
PB	⇨	⇨	⇨	⇨

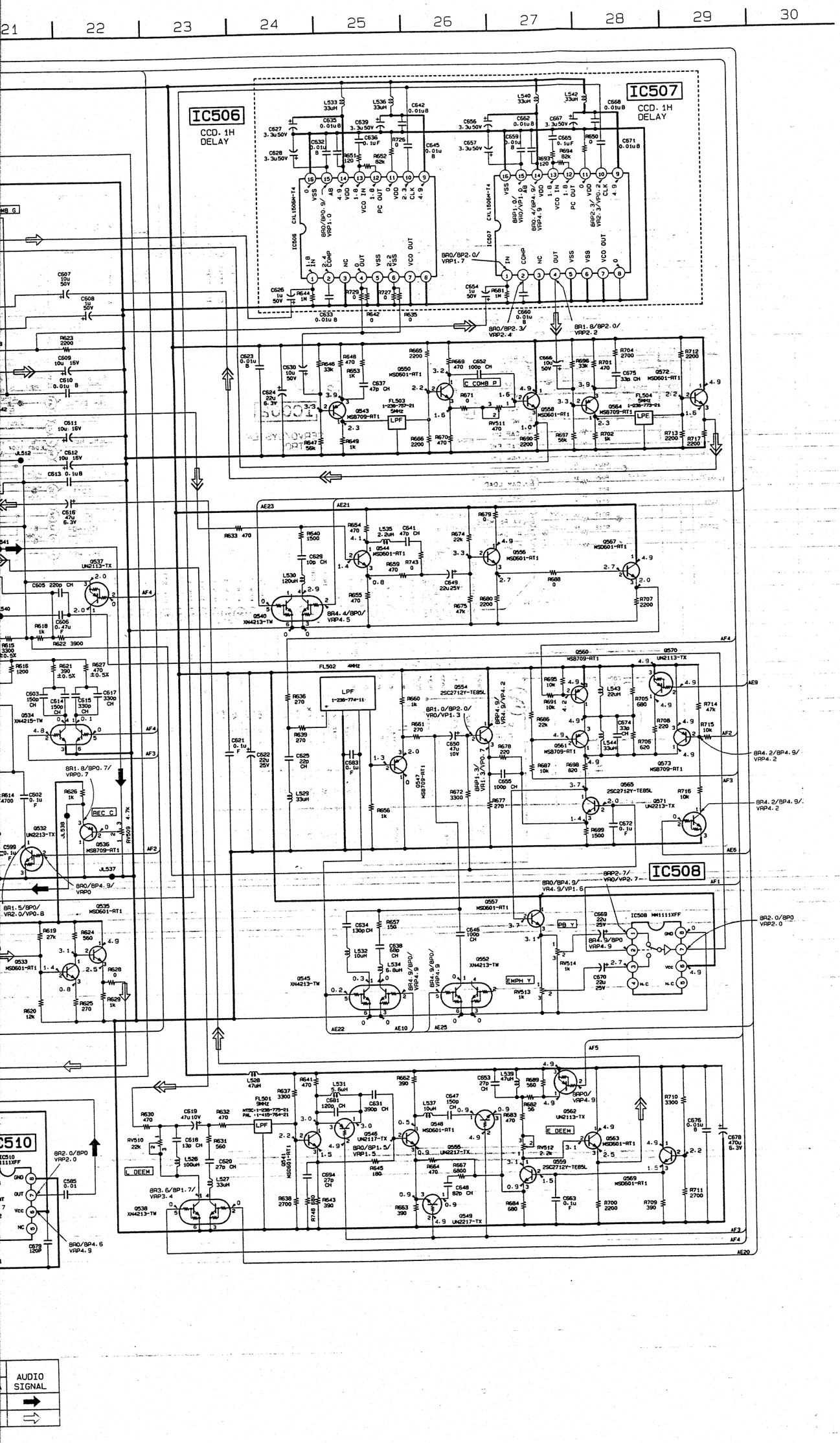

Video 8 VIDE
MH-18 (1/5)

MH-18 (Video 8 SERVO/SYSTEM CONTROL) SCHEMATIC DIAGRAM
— Ref. No. MH-18 Board; 2,000 Series —

• See page 4-6 for MH-18 BOARD printed wiring board.

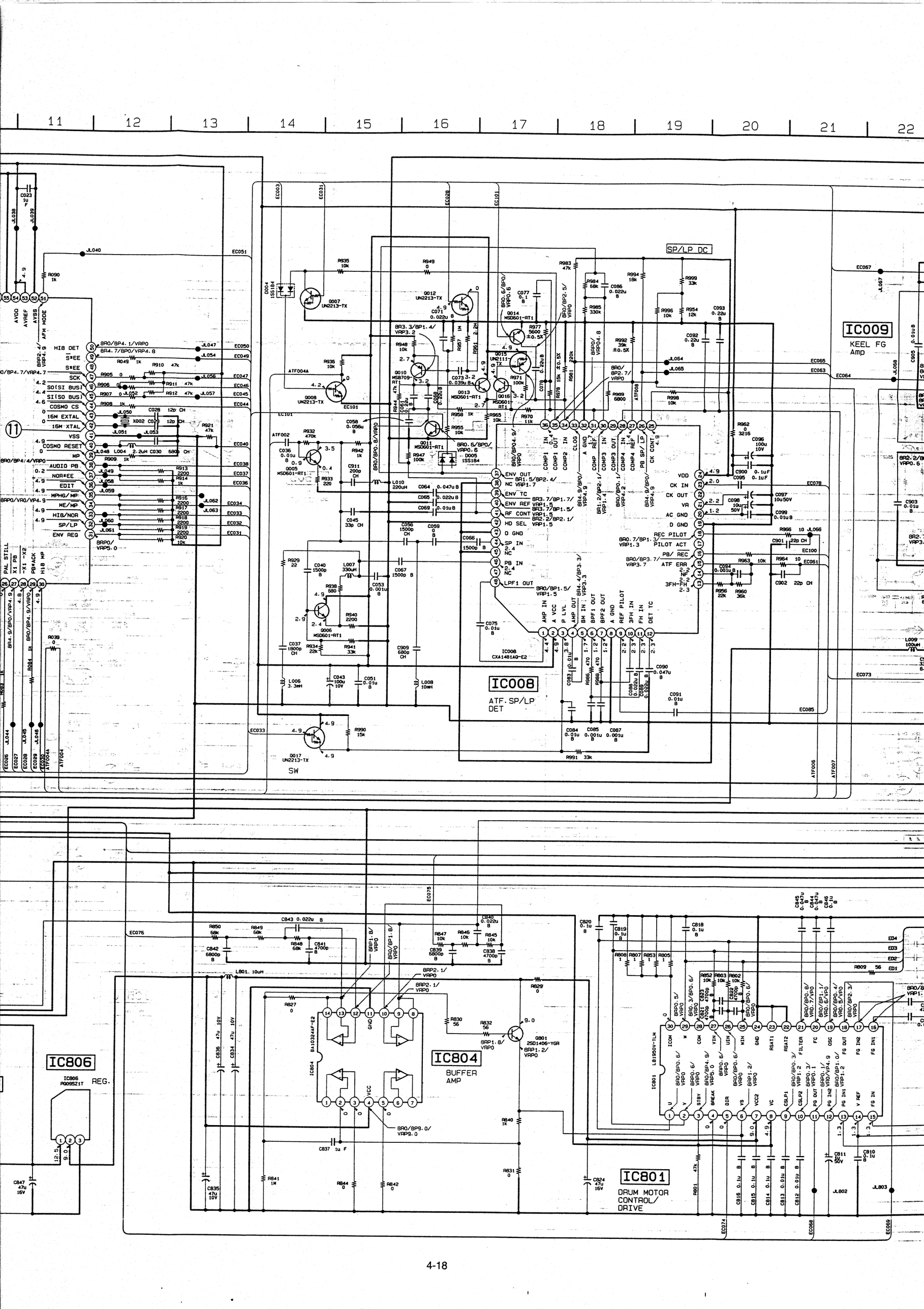
SP/LP DC
IC009
KEEL FG
Amp
IC008
ATF. SP/LP
DET
SW
IC806
REG.
IC804
BUFFER
AMP
IC801
DRUM MOTOR
CONTROL/
DRIVE

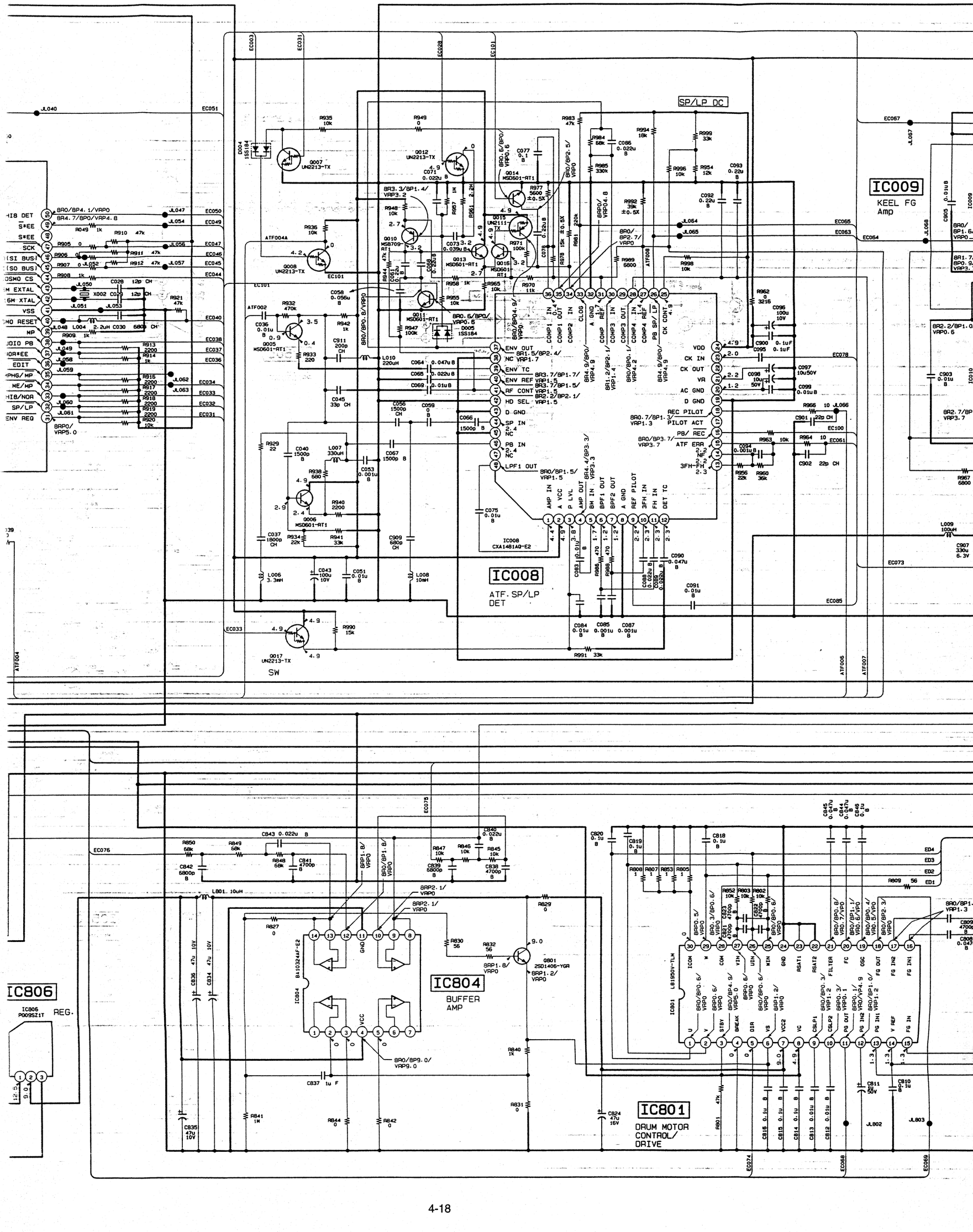
IC009
KEEL FG
Amp
IC008
ATF. SP/LP
DET
SW
IC804
BUFFER
AMP
IC801
DRUM MOTOR
CONTROL/
DRIVE
IC806
REG.
SP/LP DC

NO MARK : COMMON MODE
VR : VHS REC MODE
VP : VHS PB MODE
8R : 8mm REC MODE
8P : 8mm PB MODE
8RP : 8mm REC/PB MODE
VRP : VHS REC/PB MODE

Note :
The components indentified by mark ⚠ or dotted line with mark ⚠ are critical for safety.
Replace only with part number specified.

8mm MD
F-MECHA

CN005 19P

19	CC DOWN	19
18	TOP SENS	18
17	TOP/END 5V	17
16	S REEL FG(-)	16
15	REEL 5V	15
14	END SENS	14
13	TAPE 8/9	13
12	TAPE 10/13	12
11	S REEL FG(+)	11
10	T REEL FG(+)	10
9	T REEL FG(-)	9
8	COM	8
7	MODE 0	7
6	MODE 1	6
5	MODE 2	5
4	MODE 3	4
3	ME/MP	3
2	HI8 MP	2
1	REC PROOF	1

CN004 15P

15	GND(E)	15
14	VCC	14
13	C FG(+)	13
12	C FG(-)	12
11	CAP W	11
10	CAP U	10
9	HE GND	9
8	VHE(+)	8
7	VHE(-)	7
6	HE VCC	6
5	UHE(+)	5
4	UHE(-)	4
3	CAP V	3
2	WHE(+)	2
1	WHE(-)	1

IC010
KEEL FG
Amp

TOP/END
LED DRIVE

IC803
AMP

IC805
AMP

IC802
CAPSTAN
MOTOR DRIVE

CN006 7P

7	DRUM U	JL084
6	DRUM V	JL085
5	DRUM W	JL086
4	COMON	JL087
3	DFG	JL088
2	COMMON(FGPG)	JL089
1	DPG	JL090

TO
RP-211
BOARD
CN302
(SEE PAGE 4-4)

MH-18 BOARD (2/2)

⑪ IC2 ㊷ EE
16MHz 4.3Vp-p

⑫ IC2 ㊽ REC/PB
25Hz 4.9Vp-p

⑬ IC2 ㊾ REC/PB
300Hz 4.9Vp-p

⑭ IC2 ㊿ REC/PB
940Hz 4.9Vp-p

⑮ IC2 ㊽ REC/PB
5.86MHz 7.0Vp-p

⑯ IC2 ㊼ EE
11.895104MHz 4.3Vp-p

⑰ IC2 ㊾ REC/PB
25Hz 4.8Vp-p

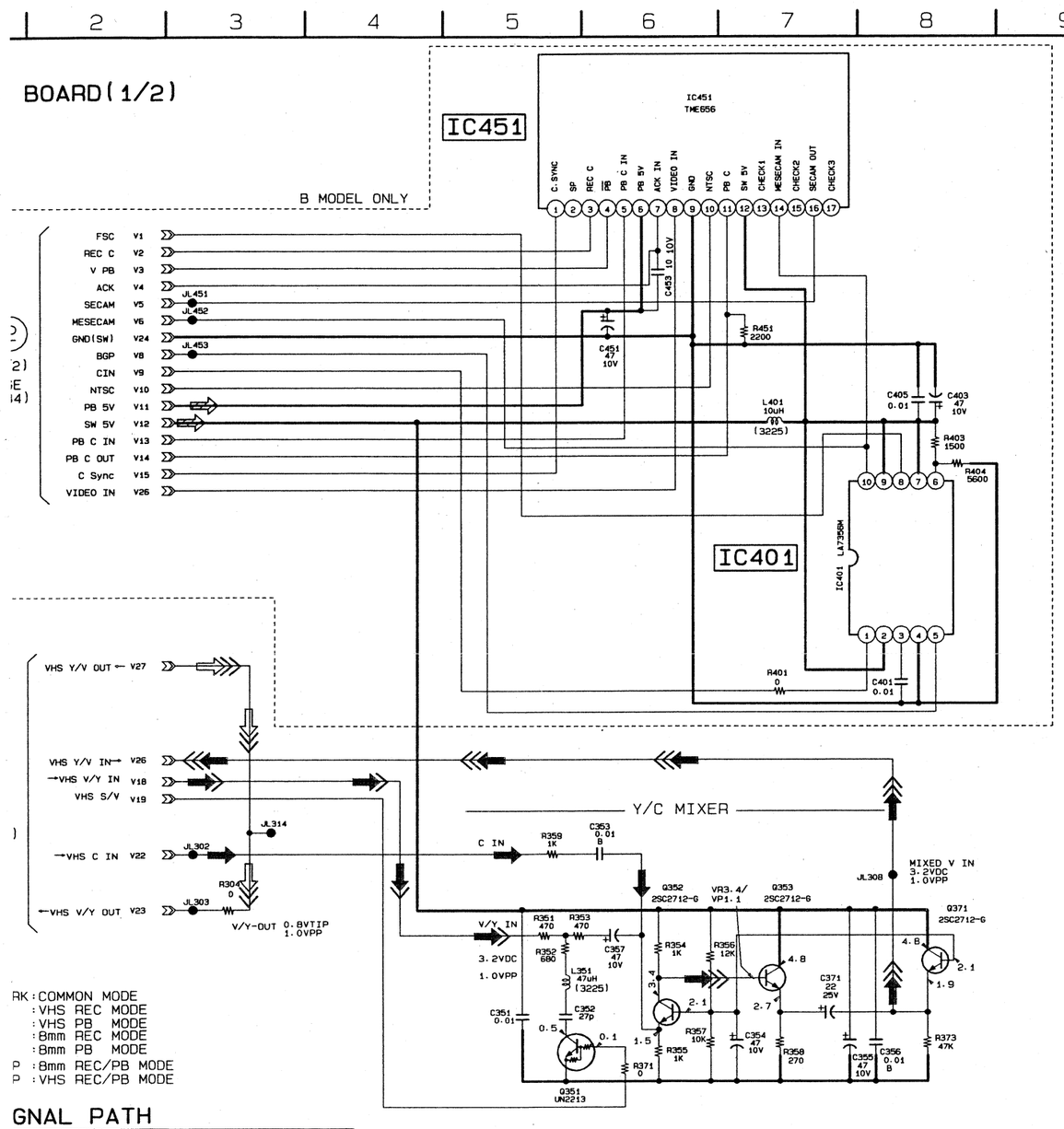

RK : COMMON MODE
: VHS REC MODE
: VHS PB MODE
: 8mm REC MODE
: 8mm PB MODE
P : 8mm REC/PB MODE
P : VHS REC/PB MODE

GNAL PATH

VIDEO SIGNAL			AUDIO SIGNAL
CHROMA	Y	Y/CHROMA	
➡	➡	➡	
		⇨	

RV-50 BOARD

① IC001 ② REC 0.1µsec/div 0.1V/div	⑦ IC501 ㊳ REC H 0.4Vp-p	⑬ IC501 ㉕ PB H 0.5Vp-p
② IC001 ④ REC 0.1µsec/div 1V/div	⑧ IC501 ㊹ REC 0.1µsec/div 0.5V/div	⑭ IC502 ㉓ PB H 280mVp-p
③ IC001 ㉘ REC 0.1µsec/div 50mV/div	⑨ IC501 ⑦ REC H 0.9Vp-p	⑮ IC931 ⑬ PB 0.1µsec/div 0.1V/div
④ IC001 ㉗ PB 0.1µsec/div 0.2V/div	⑩ IC501 ⑪ REC H 2.3Vp-p	⑯ IC931 ④ PB 0.1µsec/div 0.2V/div
⑤ IC001 ㉔ PB 0.1µsec/div 50mV/div	⑪ IC501 ⑲ REC H 530mVp-p	⑰ IC501 ㊸ PB 0.1µsec/div 0.2V/div
⑥ IC001 ㉒ PB 0.1µsec/div 0.1V/div	⑫ IC501 ㉗ EE 4.433619MHz 0.5Vp-p	

mounted in this model.

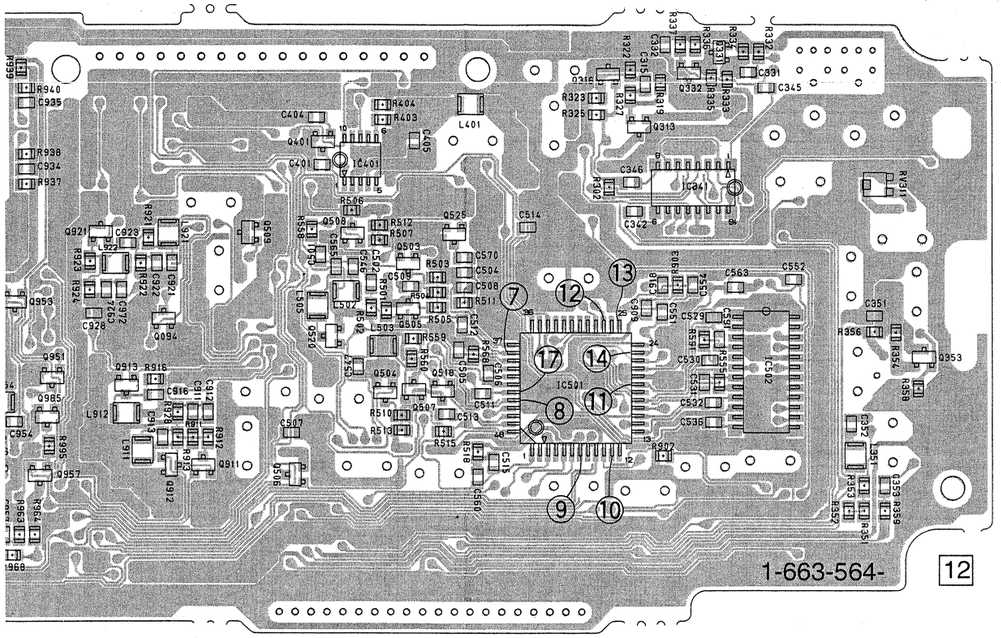

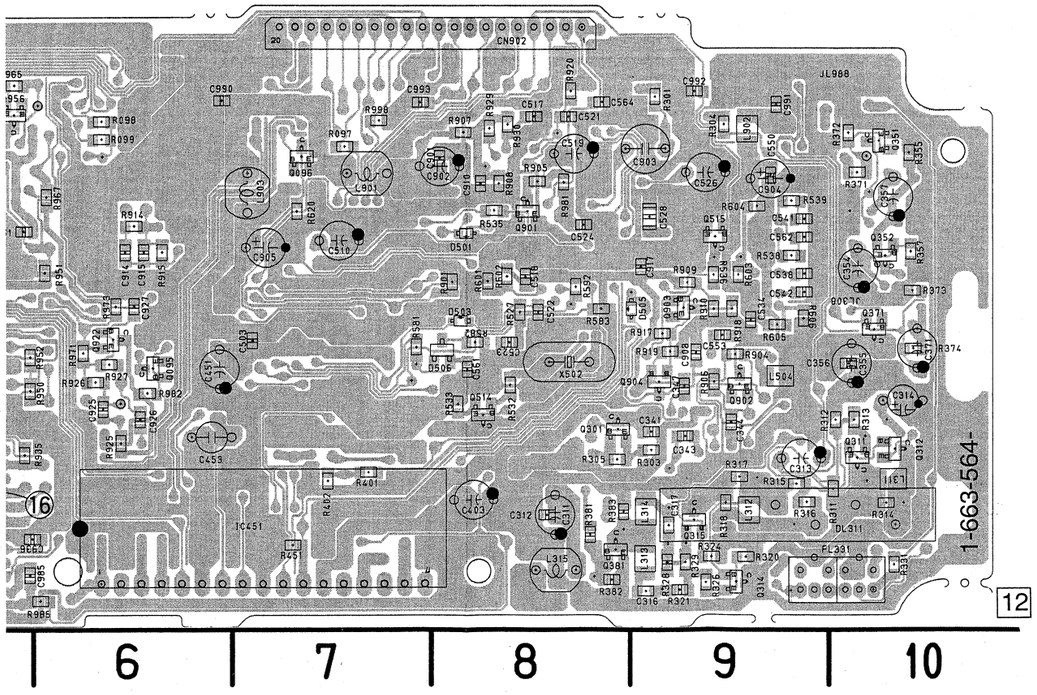

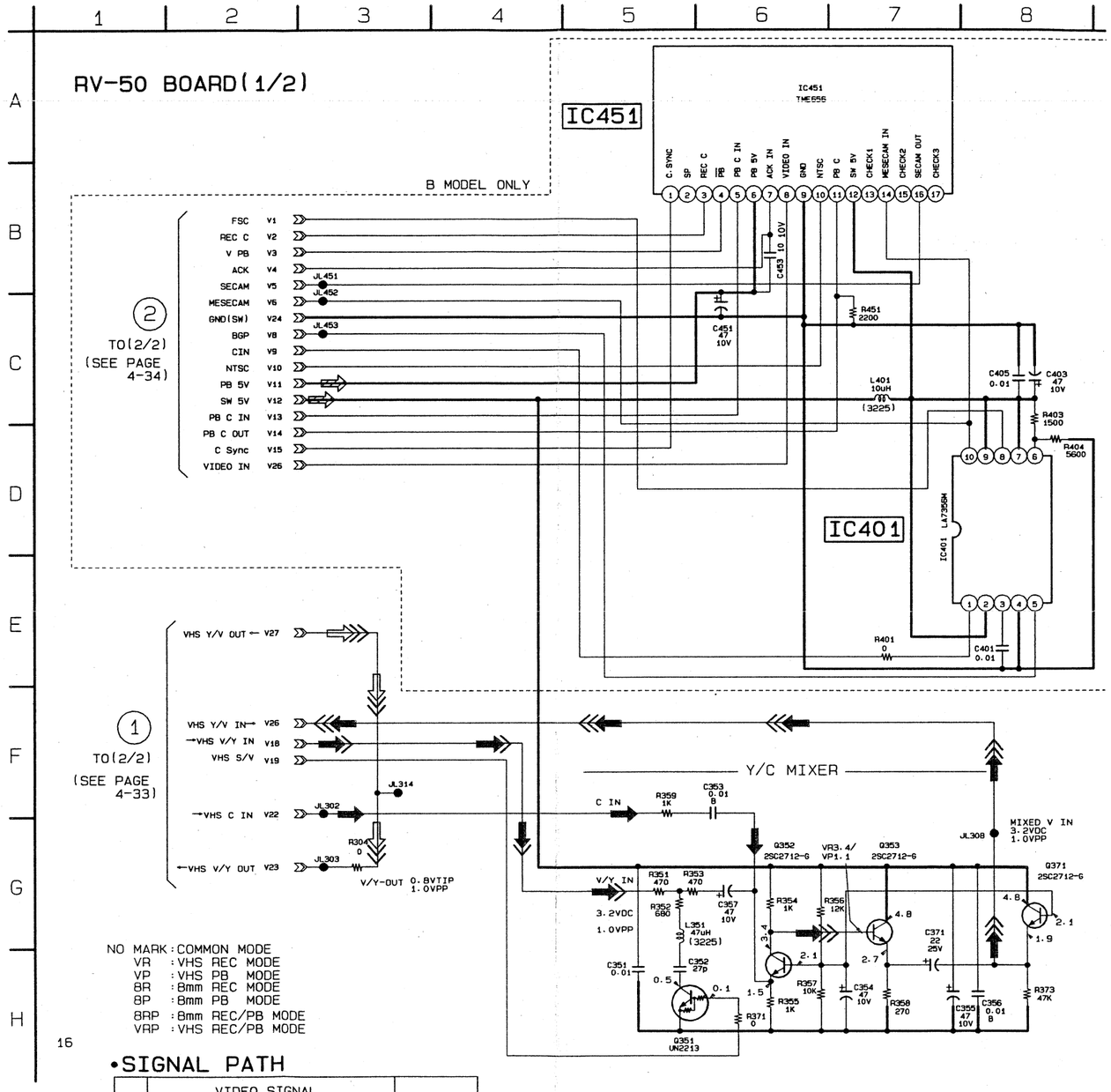

RV-50 (VHS REC/PB AMP) PRINTED WIRING BOARD AND SCHEMATIC DIAGRAM

— Ref. No. RV-50 Board; 3,000 Series —

There are few cases that the part printed on this diagram isn't mounted in this model.

RV-50 BOARD

CN001	F-3	Q351	E-10
CN002	G-1	Q352	F-10
CN901	E-2	Q353	C-10
CN902	F-8	Q371	F-10
		Q503	B-7
D501	F-8	Q504	C-7
D503	F-8	Q505	B-7
D505	F-9	Q506	C-7
D506	F-8	Q507	C-7
D951	C-5	Q508	B-7
		Q509	B-7
IC001	F-4	Q514	G-8
IC051	F-2	Q515	F-9
IC401	B-7	Q518	C-8
IC451	B-7	Q520	B-7
IC501	C-8	Q525	B-8
IC502	C-9	Q610	A-5
IC931	G-5	Q901	F-8
		Q912	C-6
Q021	B-4	Q921	B-6
Q022	B-4	Q922	F-6
Q093	E-4	Q932	F-5
Q094	B-6		
Q095	F-6		

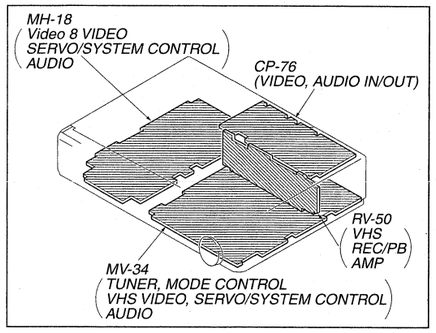

RV-50 BOARD (COMPONENT SIDE)

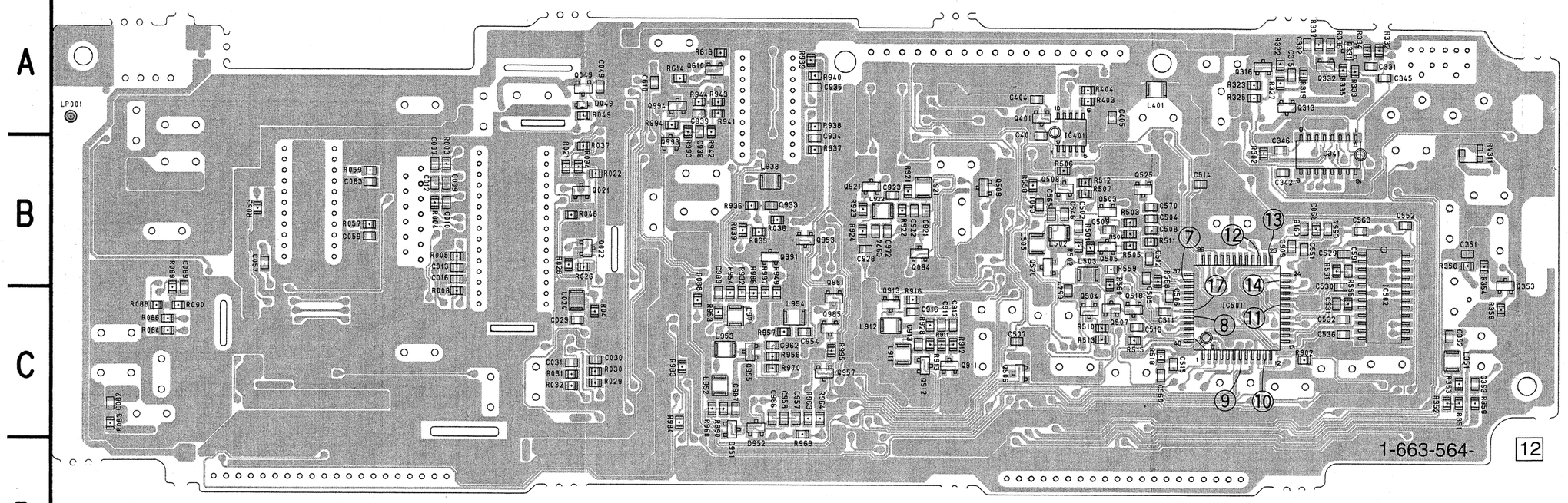

RV-50 BOARD (CONDUCTOR SIDE)

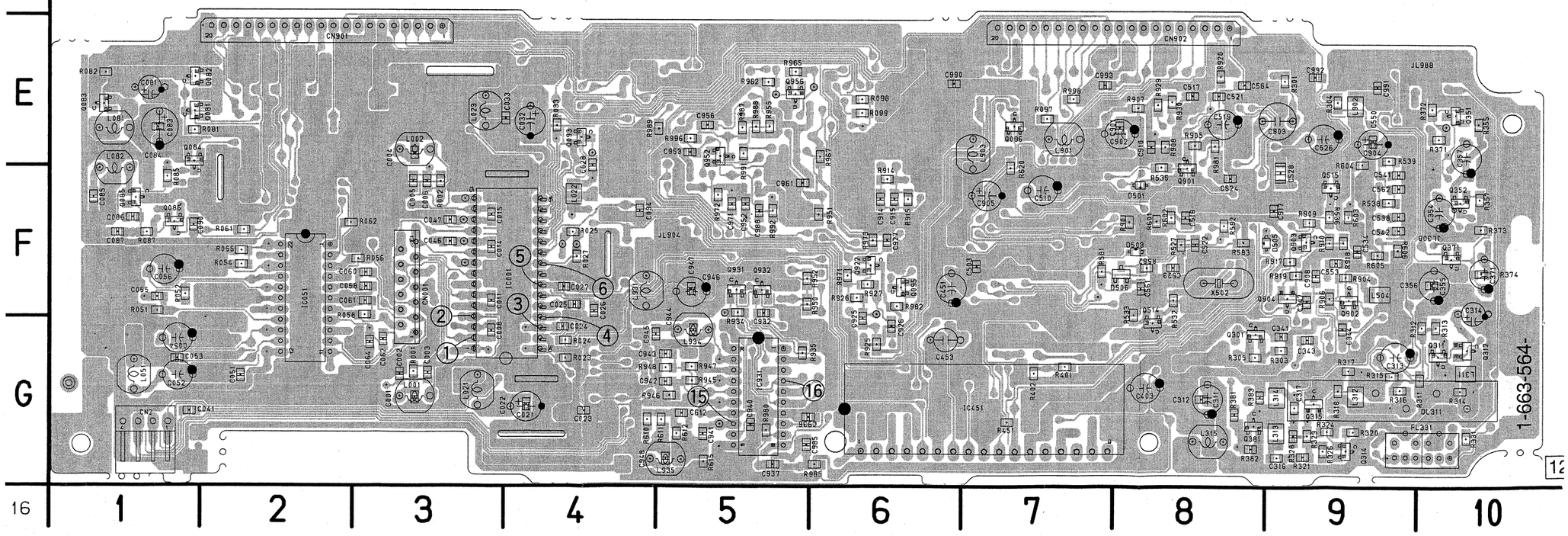

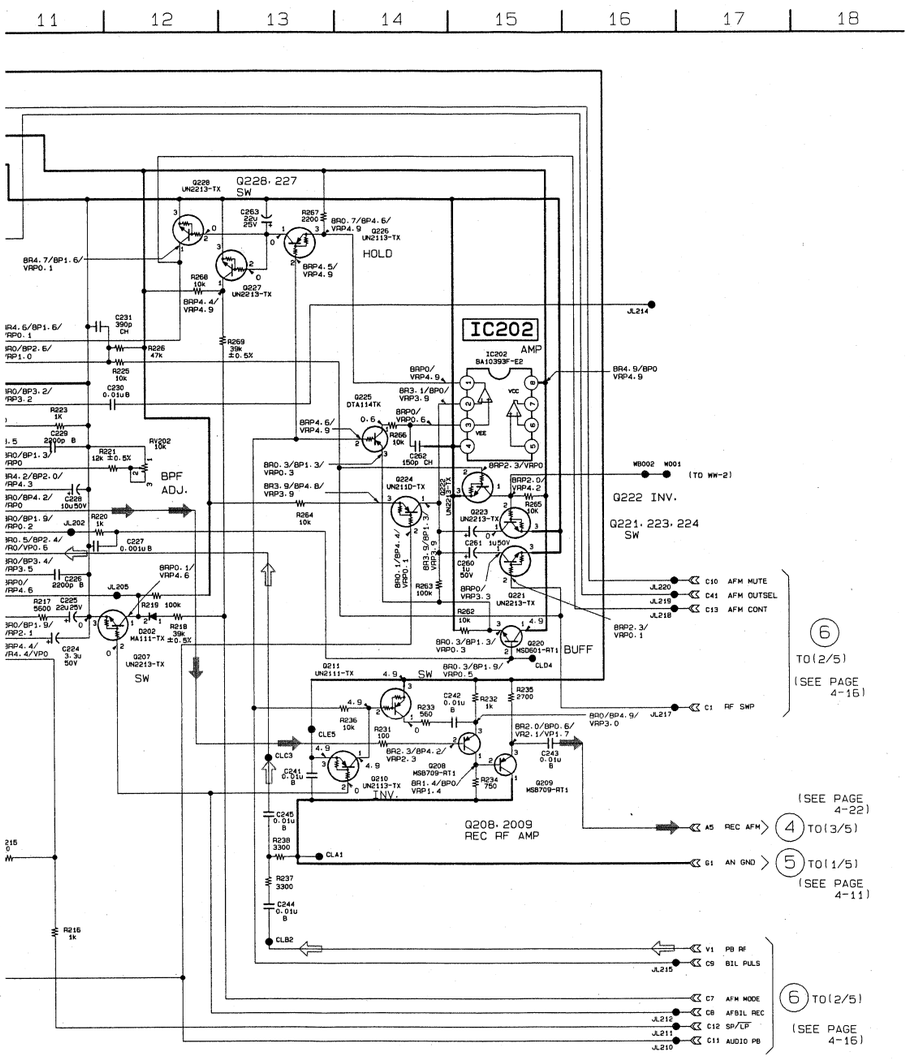

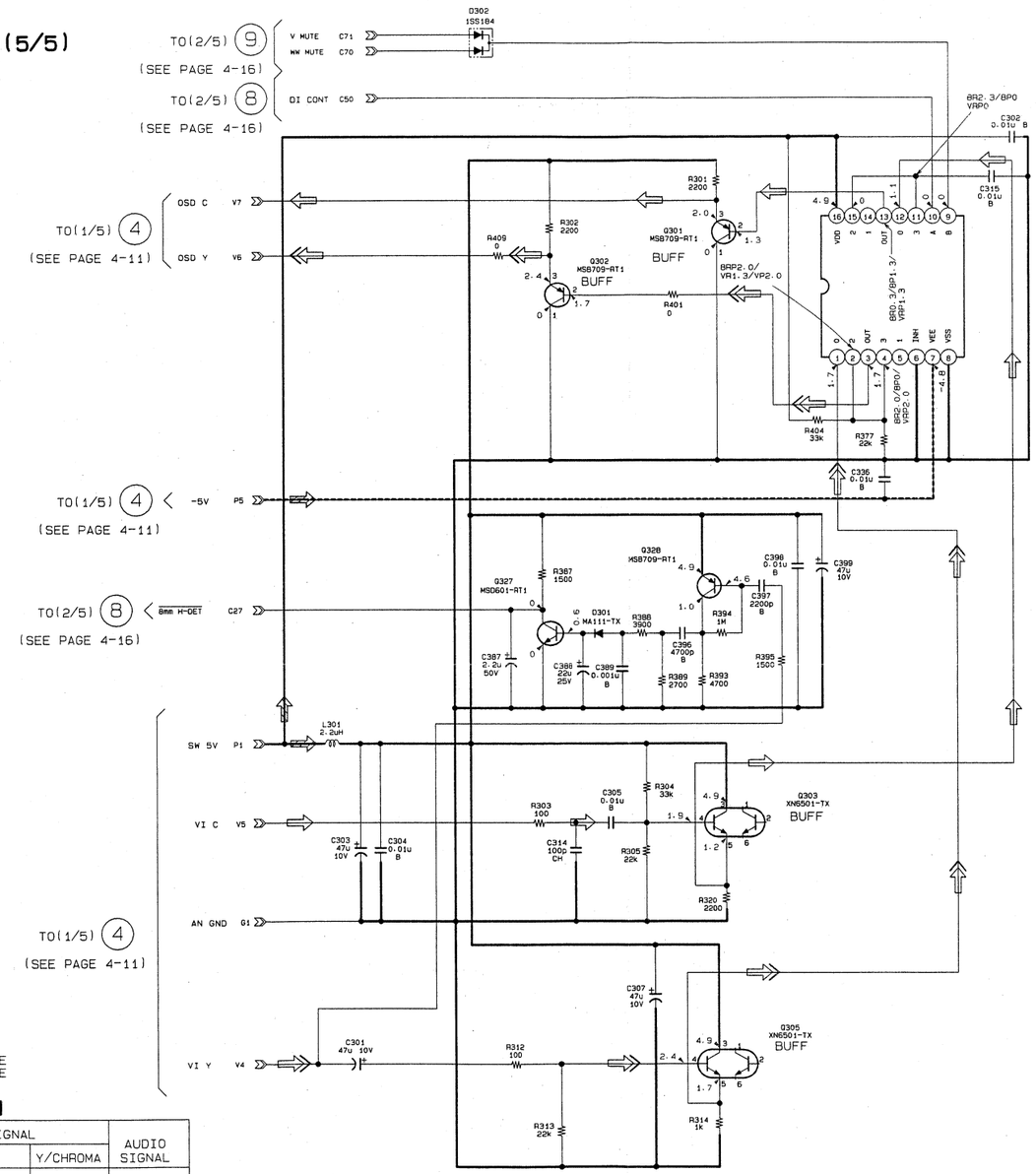

NO MARK : COMMON MODE
VR : VHS REC MODE
VP : VHS PB MODE
8R : 8mm REC MODE
8P : 8mm PB MODE
8RP : 8mm REC/PB MODE
VRP : VHS REC/PB MODE

•SIGNAL PATH

	VIDEO SIGNAL			AUDIO SIGNAL
	CHROMA	Y	Y/CHROMA	
REC				
PB	⇨	⇨		

MH-18 BOARD (4/5)
(AU)

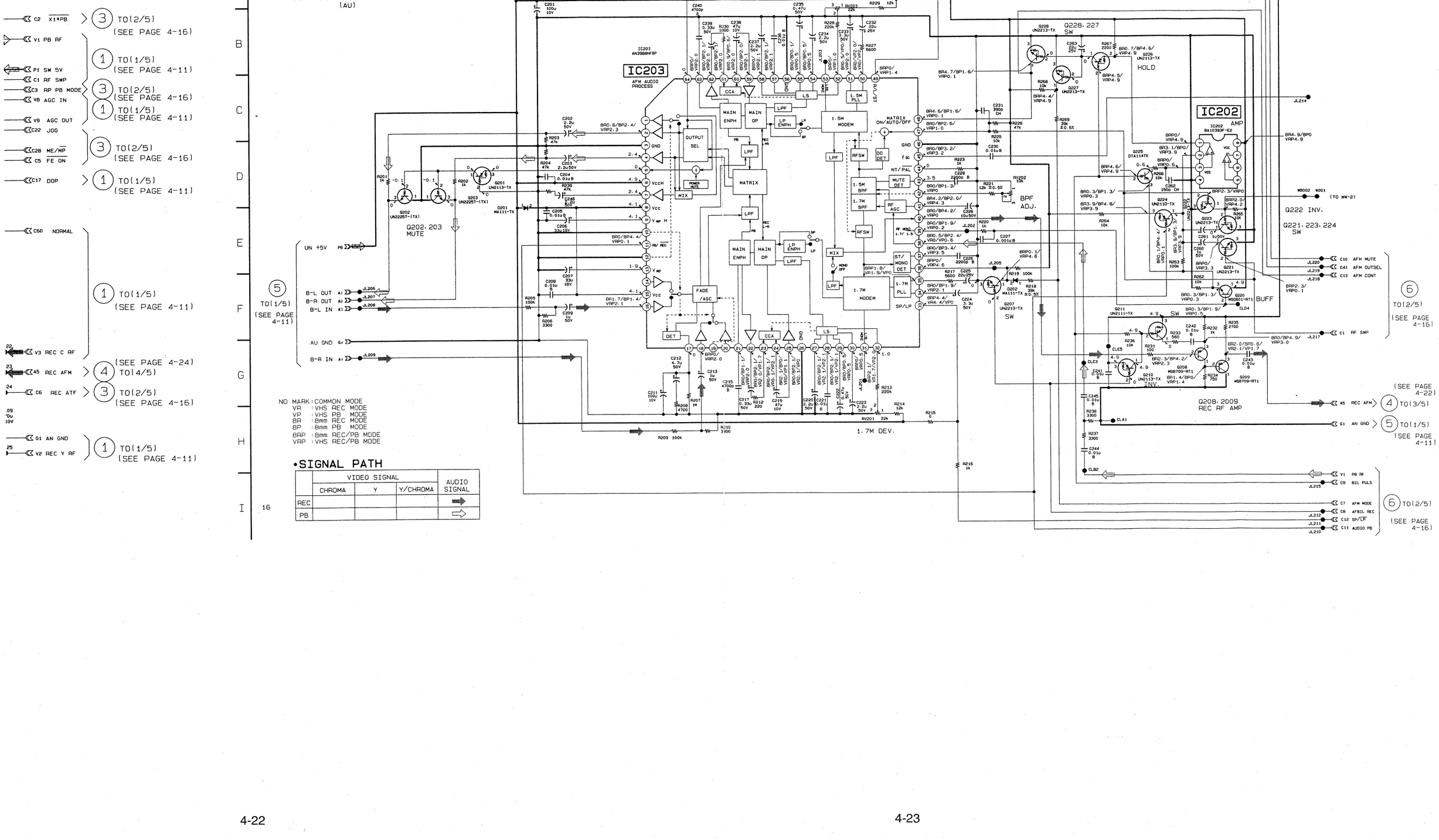

•SIGNAL PATH

	VIDEO SIGNAL			AUDIO SIGNAL
	CHROMA	Y	Y/CHROMA	
REC				➡
PB				⇨

MH-18 (Video 8 VIDEO, AUDIO) SCHEMATIC DIAGRAM
— Ref. No. MH-18 Board; 2,000 Series —

• See page 4-6 for MH-18 BOARD printed wiring board.

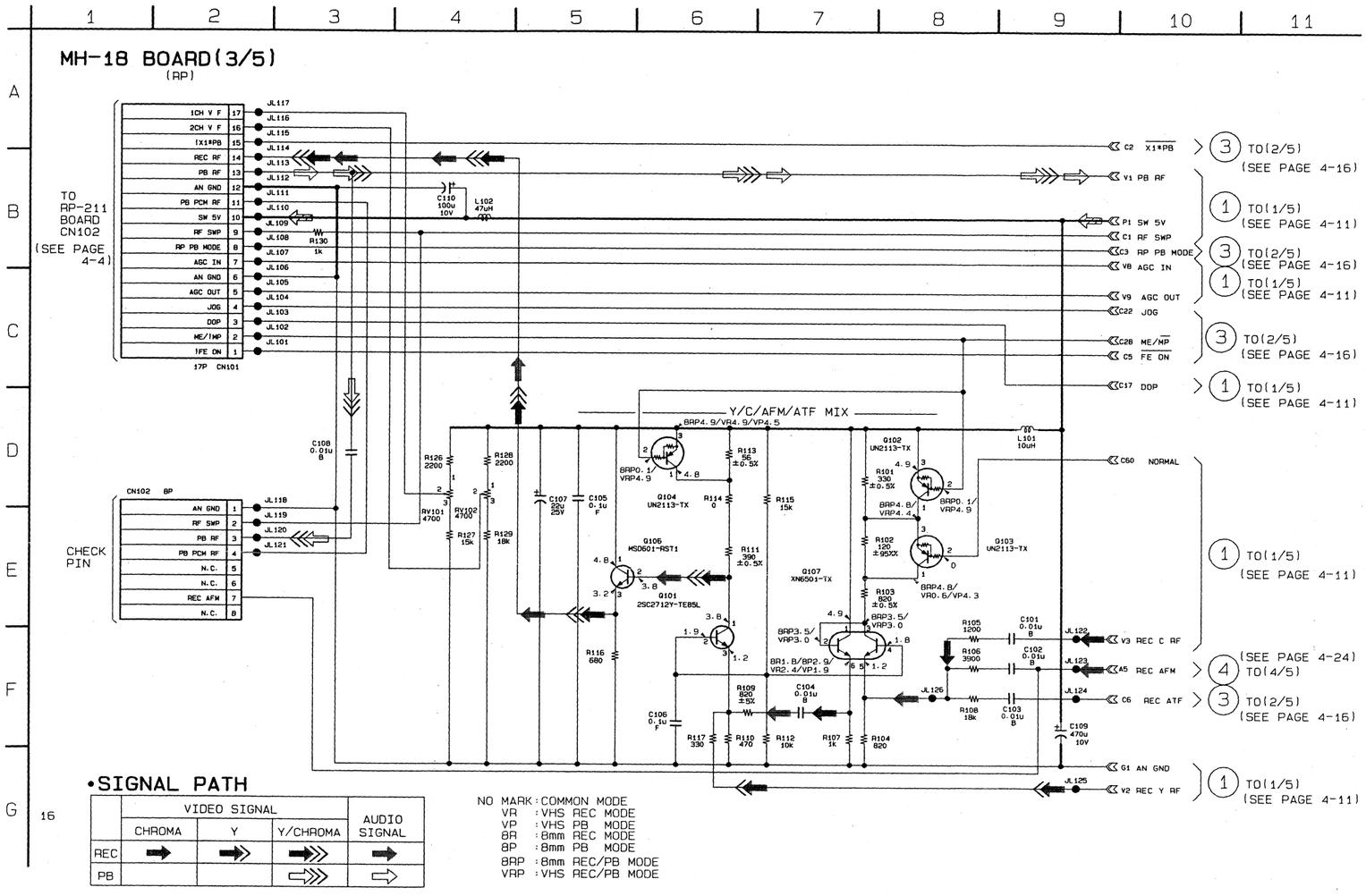

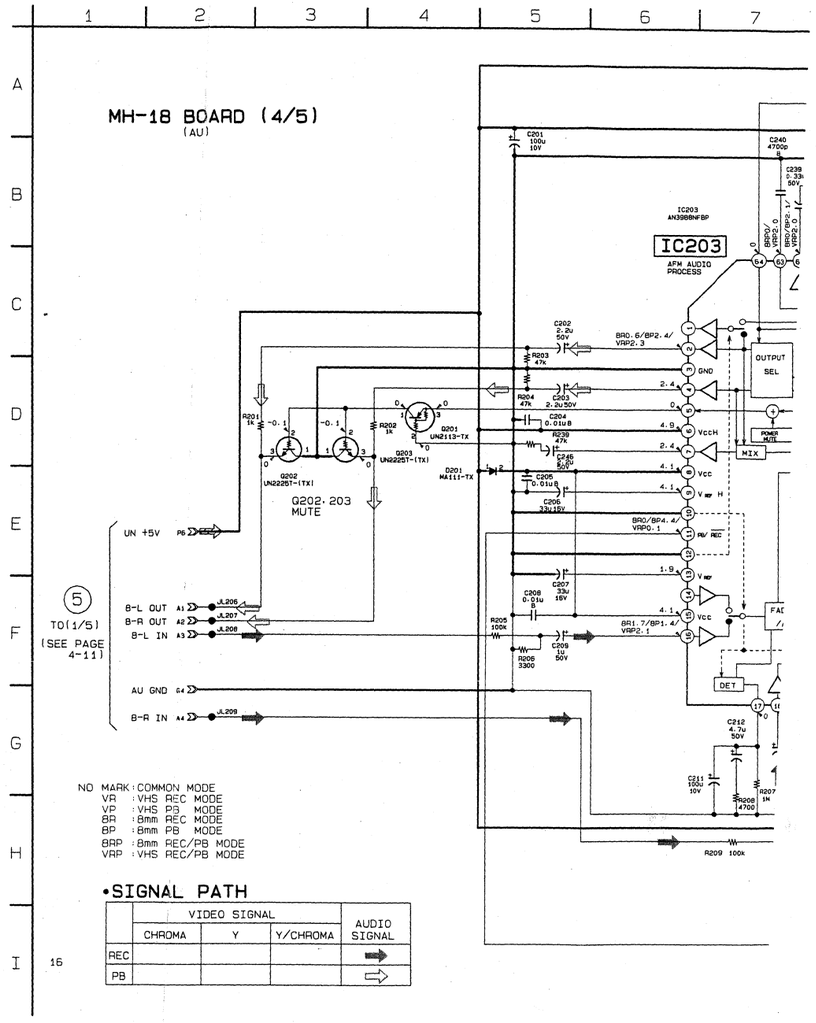

RV-50 (VHS REC/PB AMP) SCHEMATIC DIAGRAM

— Ref. No. RV-50 Board; 3,000 Series —

• See page 4-26 for RV-50 BOARD printed wiring board.

RV-50 BOARD (2/2)

IC001
REC/PB AMP
VIDEO RP
WITH SSB CONTROL

IC931
PB-Y REC
EQ&S-DET

IC051
AUDIO
RF

Q094.095
SECAM SWITCH

FOR CHECK

NO MARK : COMMON MODE
VR : VHS REC MODE
VP : VHS PB MODE
8R : 8mm REC MODE
8P : 8mm PB MODE
8RP : 8mm REC/PB MODE
VRP : VHS REC/PB MODE

•SIGNAL PATH

	VIDEO SIGNAL			AUDIO SIGNAL
	CHROMA	Y	Y/CHROMA	
REC	➡	➡	➡	➡
PB		⇨	⇨	⇨

TO MV-34 BOARD CN301 (SEE PAGE 4-51)

TO MV-34 BOARD CN302 (SEE PAGE 4-4

ng board.

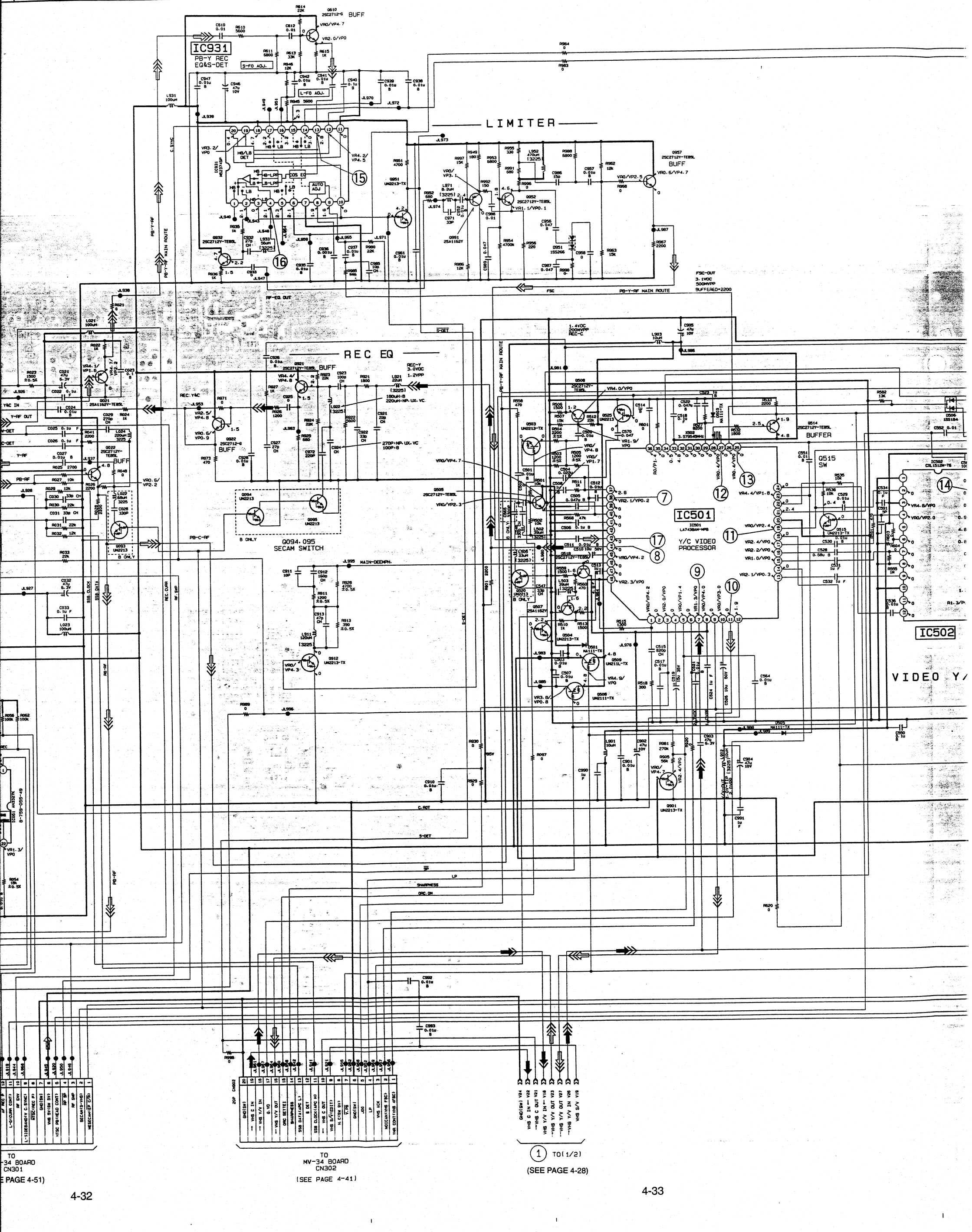
IC931
PB-Y REC EQ&S-DET
S-F0 ADJ.
L-F0 ADJ.
REC EQ
LIMITER
IC501
Y/C VIDEO PROCESSOR
Q515 SW
BUFFER
Q094.095 SECAM SWITCH
IC502
VIDEO Y/
MAIN-DEEMPH.
PB-Y-RF MAIN ROUTE
RF-EQ OUT
FSC
FSC-OUT 3.1VDC 500MVPP BUFFERED*2200
REC-Y 3.0VDC 1.2VPP
1.4VDC 200MVPP REC-C
S-DET
C-ROT
SSB
LP
SHARPNESS
ORC ON
TO MV-34 BOARD CN301
(SEE PAGE 4-51)
TO MV-34 BOARD CN302
(SEE PAGE 4-41)
TO(1/2)
(SEE PAGE 4-28)

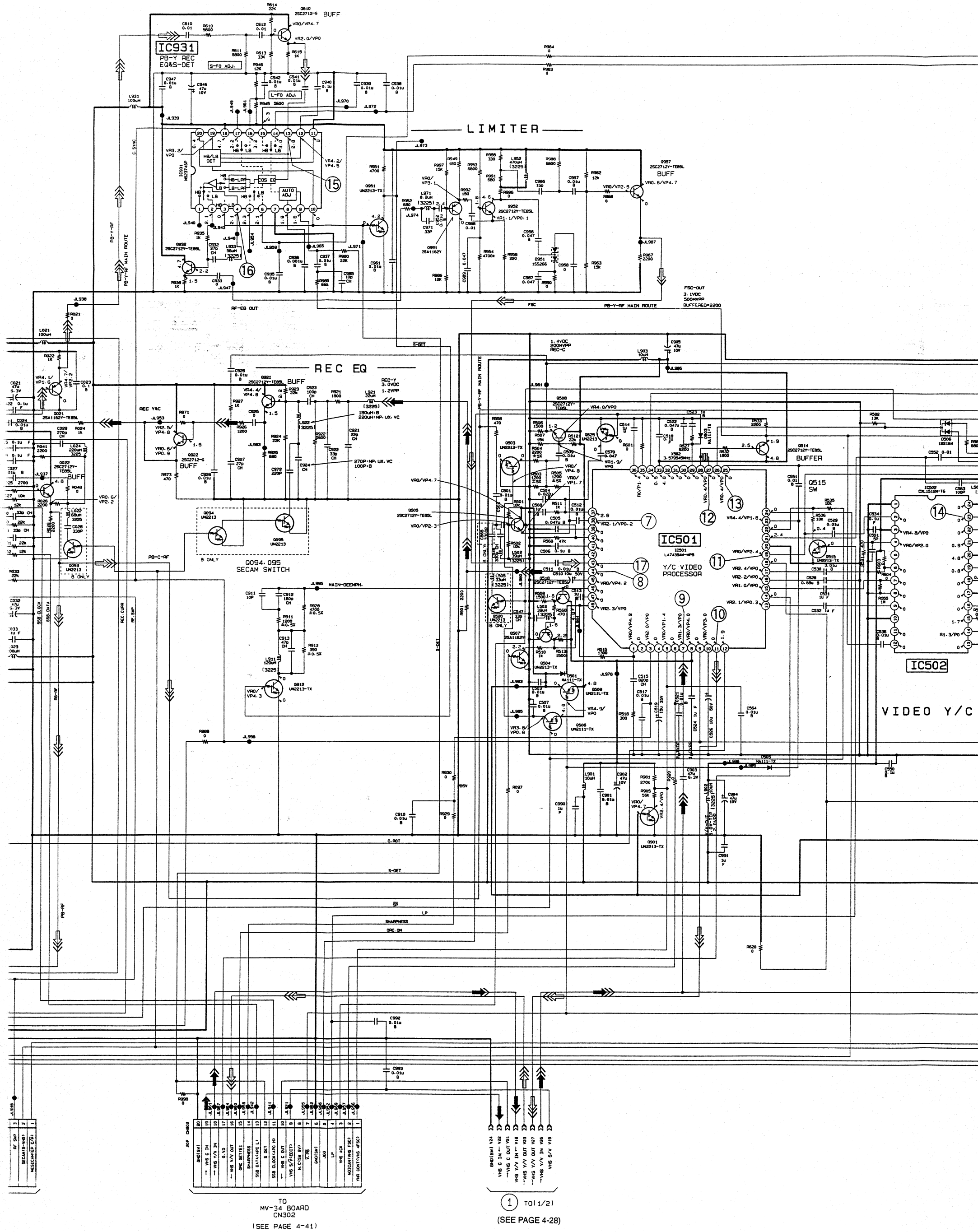
IC931
PB-Y AEC EQ&S-DET
S-F0 ADJ.
L-F0 ADJ.
HB/LB DET
B-LPF
COS EQ
AUTO ADJ
LIMITER
REC EQ
BUFF
Q094.095 SECAM SWITCH
B ONLY
IC501
Y/C VIDEO PROCESSOR
Q515 SW
BUFFER
IC502
VIDEO Y/C
PB-Y-RF MAIN ROUTE
PB-C-RF
PB-RF
RF-EQ OUT
FSC
FSC-OUT 3.1VDC 500MVPP BUFFERED=2200
MAIN-DEEMPH.
S-DET
C.ROT
SP
LP
SHARPNESS
ORC.ON
SSB CLOCK
SSB DATA
REC.CLKR
RF SWP
C.SYNC
REC Y&C
REC-Y 3.0VDC 1.2VPP
1.4VDC 200MVPP REC-C
TO MV-34 BOARD CN302
(SEE PAGE 4-41)
TO(1/2)
(SEE PAGE 4-28)

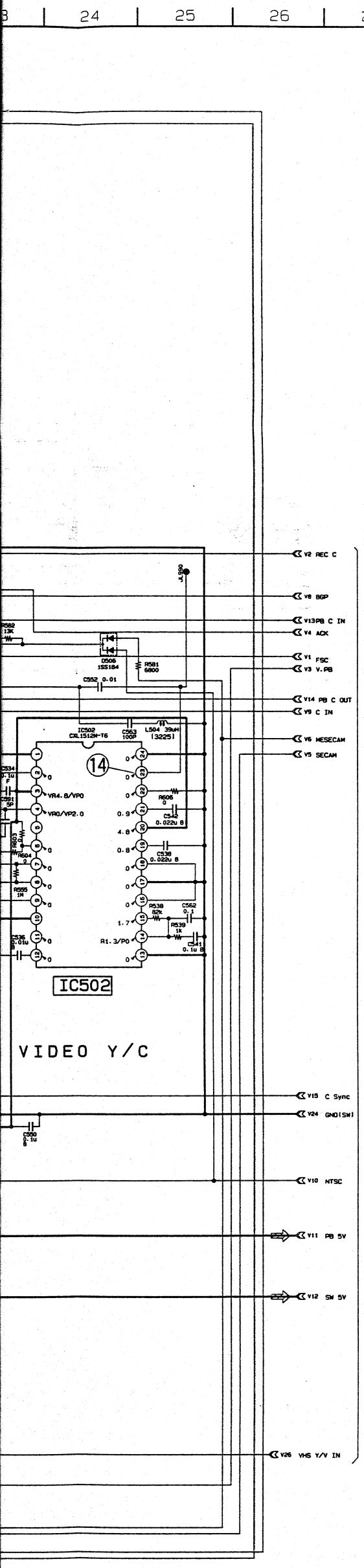

(2)

TO(1/2)

(SEE PAGE 4-28)

MV-34 (TUNER, MODE CONTROL, VHS VIDEO, SERVO/SYSTEM CONTROL, AUDIO) PRINTED WIRING BOARD

— Ref. No. MV-34 Board; 4,000 Series —

There are few cases that the part printed on this diagram isn't mount

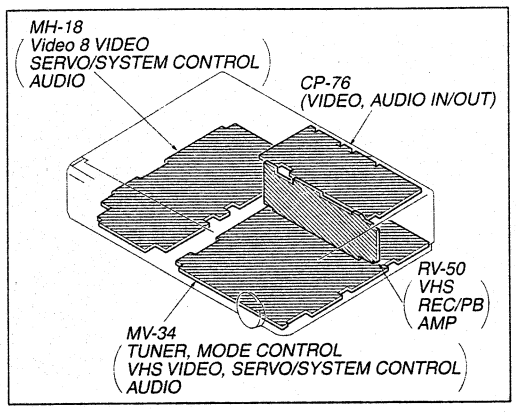

MV-34 BOARD

CN002	B-19	CN707	F-23	D512	D-24	IC401	B-22	PH261	F-15	Q502	B-26	Q601	I-20	Q901	I-25
CN003	B-16	CN708	C-23	D513	C-25	IC407	B-23	PH262	D-15	Q505	A-25	Q602	H-20	Q902	I-26
CN004	B-15			D601	I-8	IC601	I-19			Q506	B-3	Q651	J-22	Q903	H-1
CN006	E-22	D001	B-17	D701	E-25	IC602	I-21	Q004	B-18	Q507	A-25	Q652	H-22	Q904	H-1
CN101	A-22	D010	H-17	D801	D-6	IC701	D-24	Q005	B-18	Q509	A-25	Q653	H-21	Q905	I-26
CN102	B-22	D051	G-17	D802	D-6	IC702	G-3	Q007	B-18	Q512	D-25	Q654	H-21	Q911	H-1
CN301	I-22	D071	C-19	D901	I-26	IC705	E-22	Q254	J-18	Q513	B-26	Q655	H-21	Q913	H-25
CN302	C-22	D203	H-18	D903	I-26	IC706	G-25	Q261	A-18	Q515	C-25	Q701	G-4	Q915	H-26
CN400	E-24	D205	I-16	D905	H-26	IC801	C-20	Q262	J-17	Q516	C-25	Q702	H-4	Q920	E-3
CN401	I-14	D261	F-17			IC802	A-20	Q263	E-15	Q517	B-25	Q703	I-5	Q921	D-26
CN403	A-17	D265	F-15	IC051	G-18	IC901	H-2	Q301	C-21	Q518	B-24	Q704	F-24	Q922	D-26
CN404	F-14	D267	D-12	IC071	C-18	IC902	H-24	Q302	C-21	Q520	B-26	Q705	G-4	Q924	D-26
CN601	J-22	D403	B-15	IC101	B-21	IC912	I-1	Q303	D-21	Q521	B-24	Q706	F-24	Q925	I-1
CN602	J-22	D405	E-16	IC201	I-17			Q304	D-21	Q522	B-23	Q707	E-25	Q926	I-1
CN702	J-24	D501	B-4	IC271	E-18	J901	H-26	Q305	D-3	Q523	C-24	Q801	D-23	Q927	D-26
CN705	F-22	D502	B-23	IC301	C-23	J902	I-26	Q306	D-5	Q552	B-25	Q802	D-23	Q928	D-26
														Q929	D-26

MV-34 BOARD (COMPONENT SIDE)

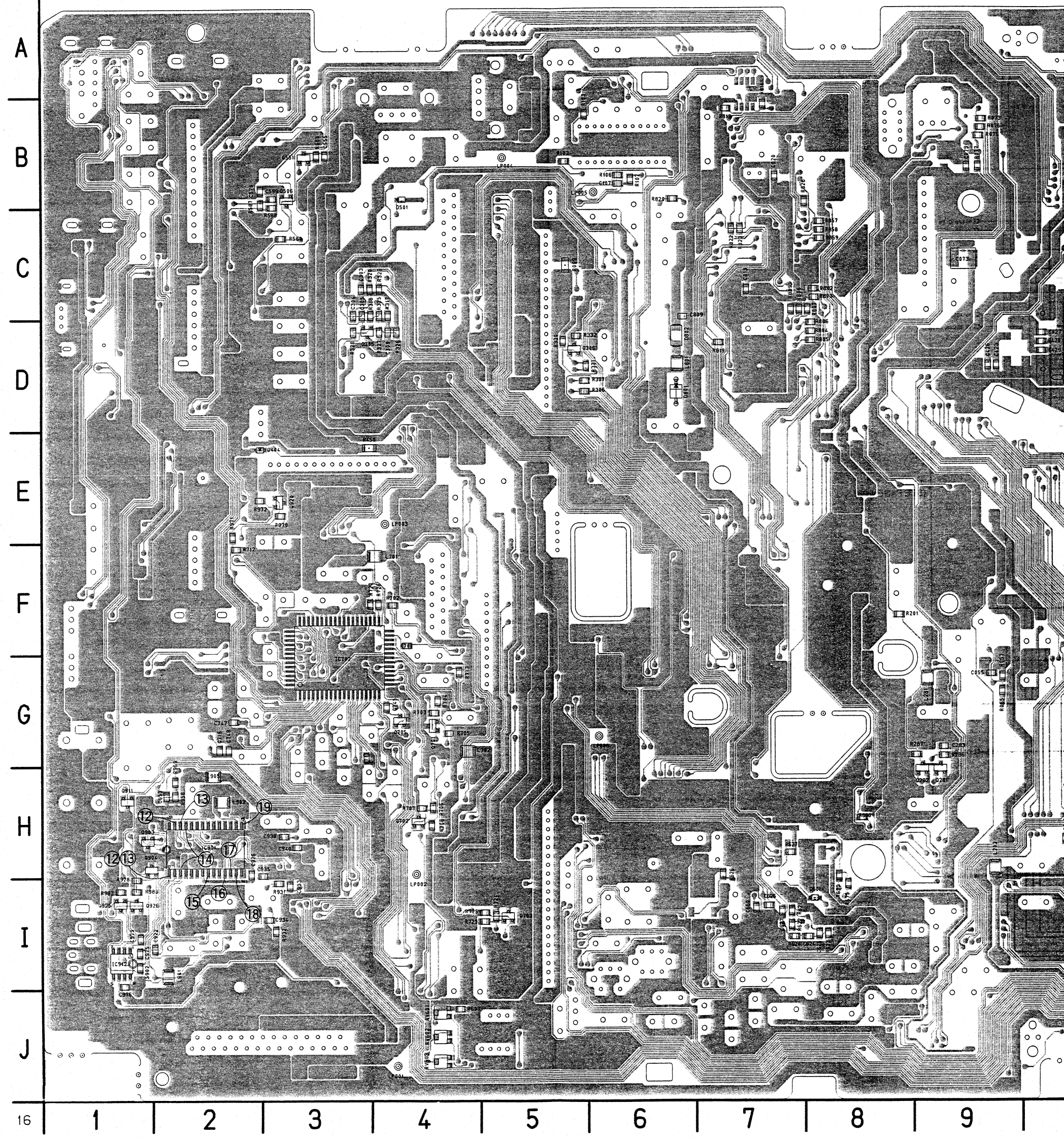

cases that the part printed on this diagram isn't mounted in this model.

Q601	I-20	Q901	I-25
Q602	H-20	Q902	I-26
Q651	J-22	Q903	H-1
Q652	H-22	Q904	H-1
Q653	H-21	Q905	I-26
Q654	H-21	Q911	H-1
Q655	H-21	Q913	H-25
Q701	G-4	Q915	H-26
Q702	H-4	Q920	E-3
Q703	I-5	Q921	D-26
Q704	F-24	Q922	D-26
Q705	G-4	Q924	D-26
Q706	F-24	Q925	I-1
Q707	E-25	Q926	I-1
Q801	D-23	Q927	D-26
Q802	D-23	Q928	D-26
		Q929	D-26

MV-34 BOARD (CONDUCTOR SIDE)

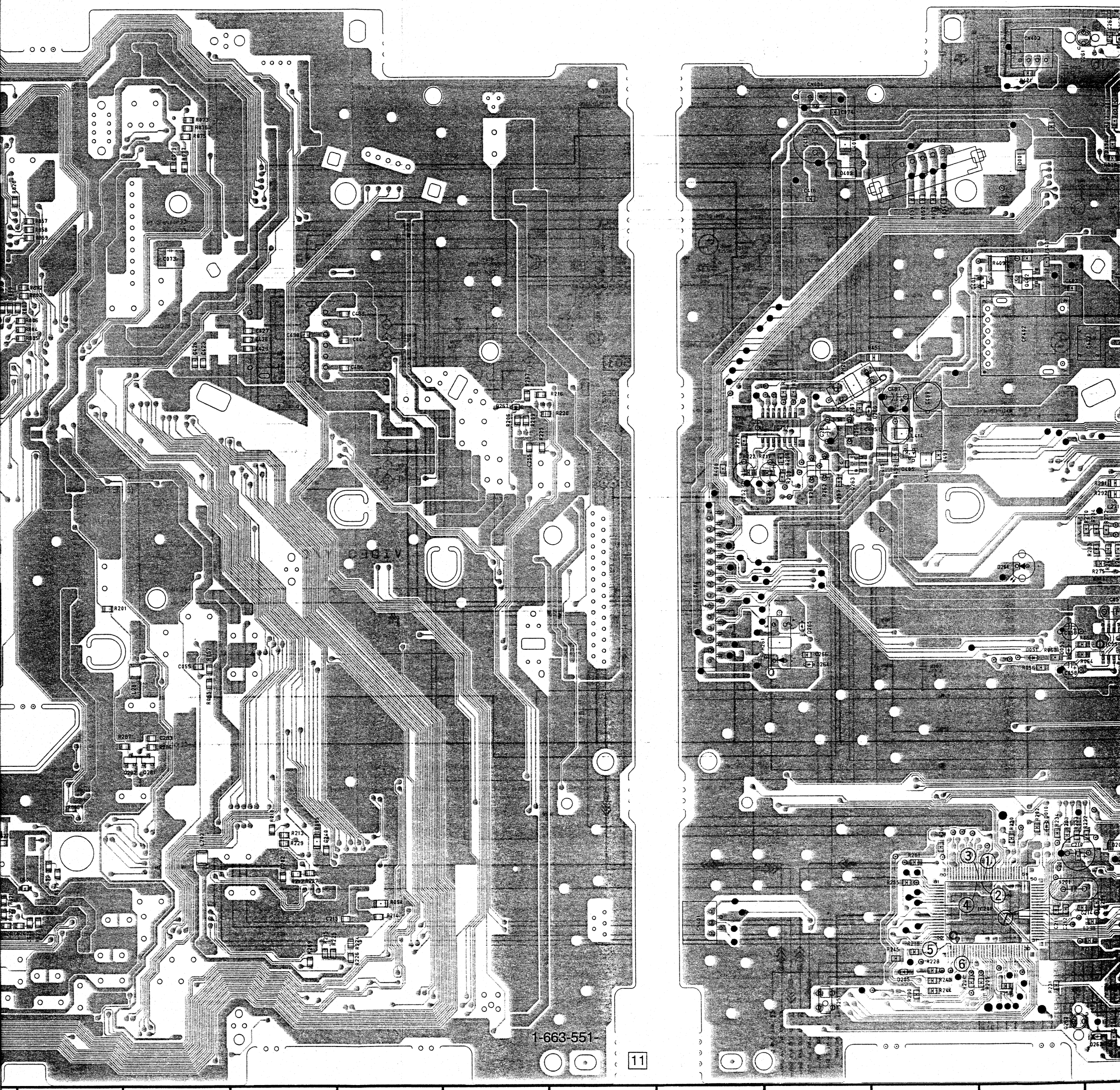

m isn't mounted in this model.

MV-34 BOARD (CONDUCTOR SIDE)

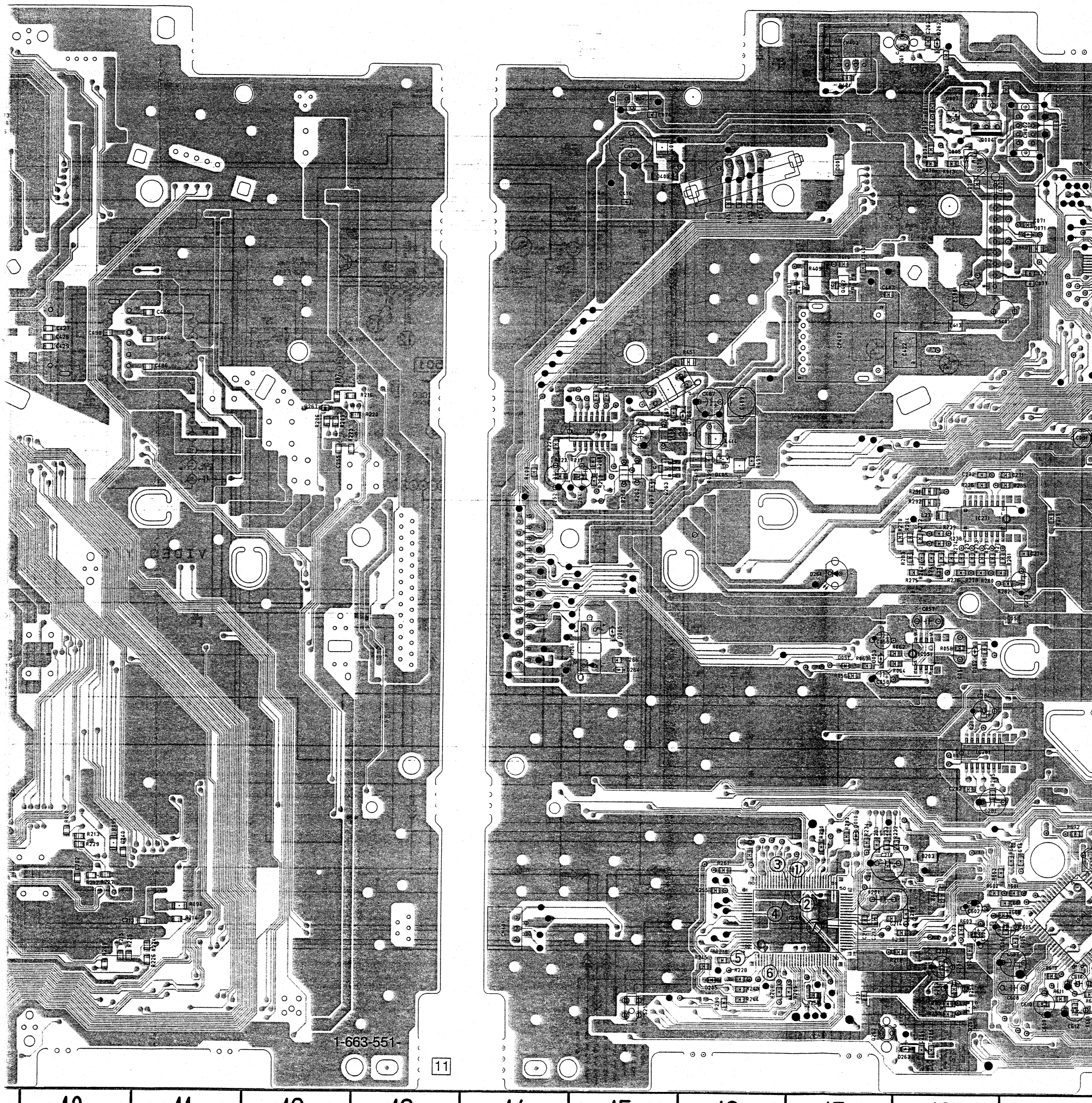

1-663-551-

11

10 11 12 13 14 15 16 17 18 19

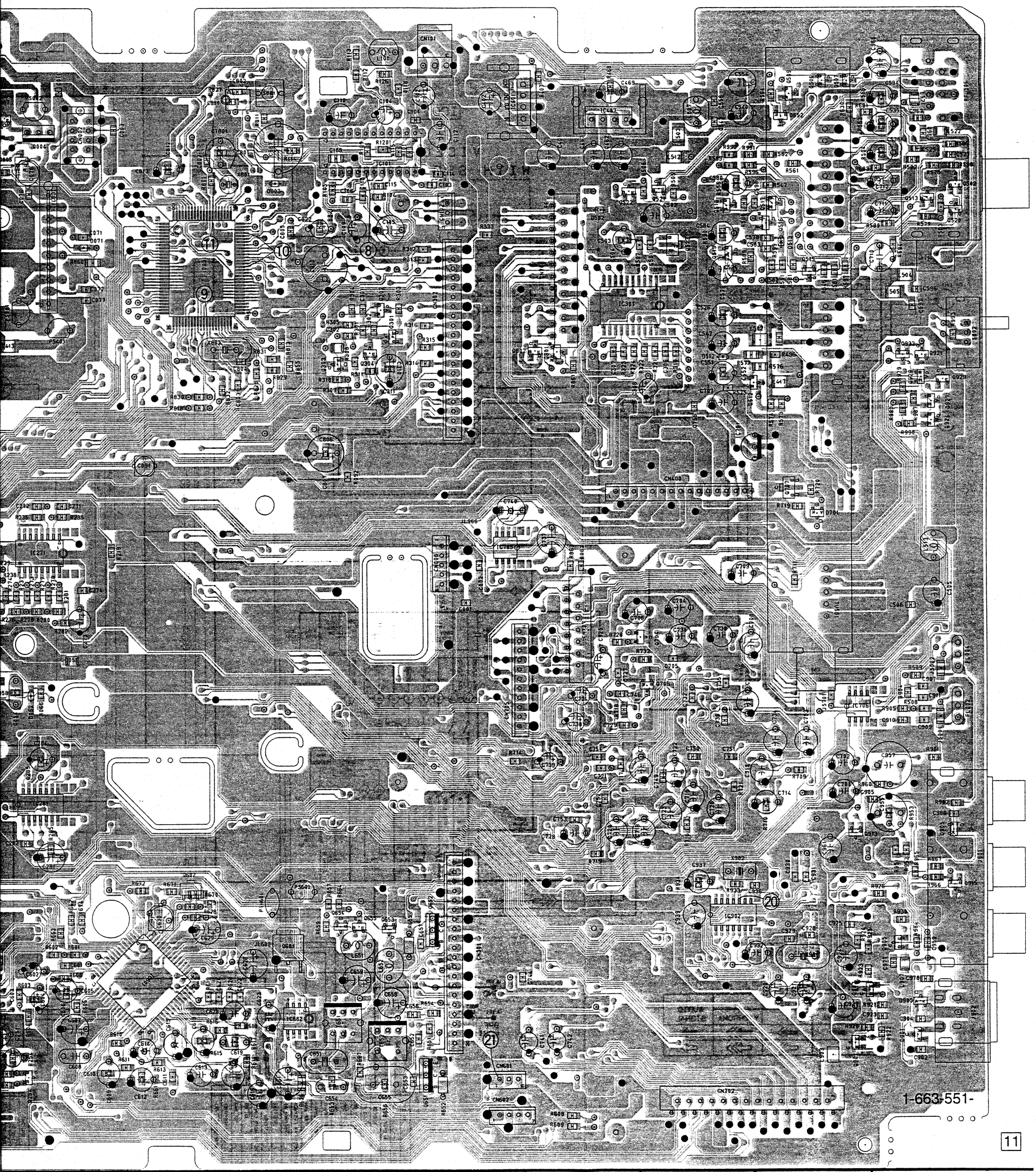
1-663-551-
11
18
19
20
21
22
23
24
25
26

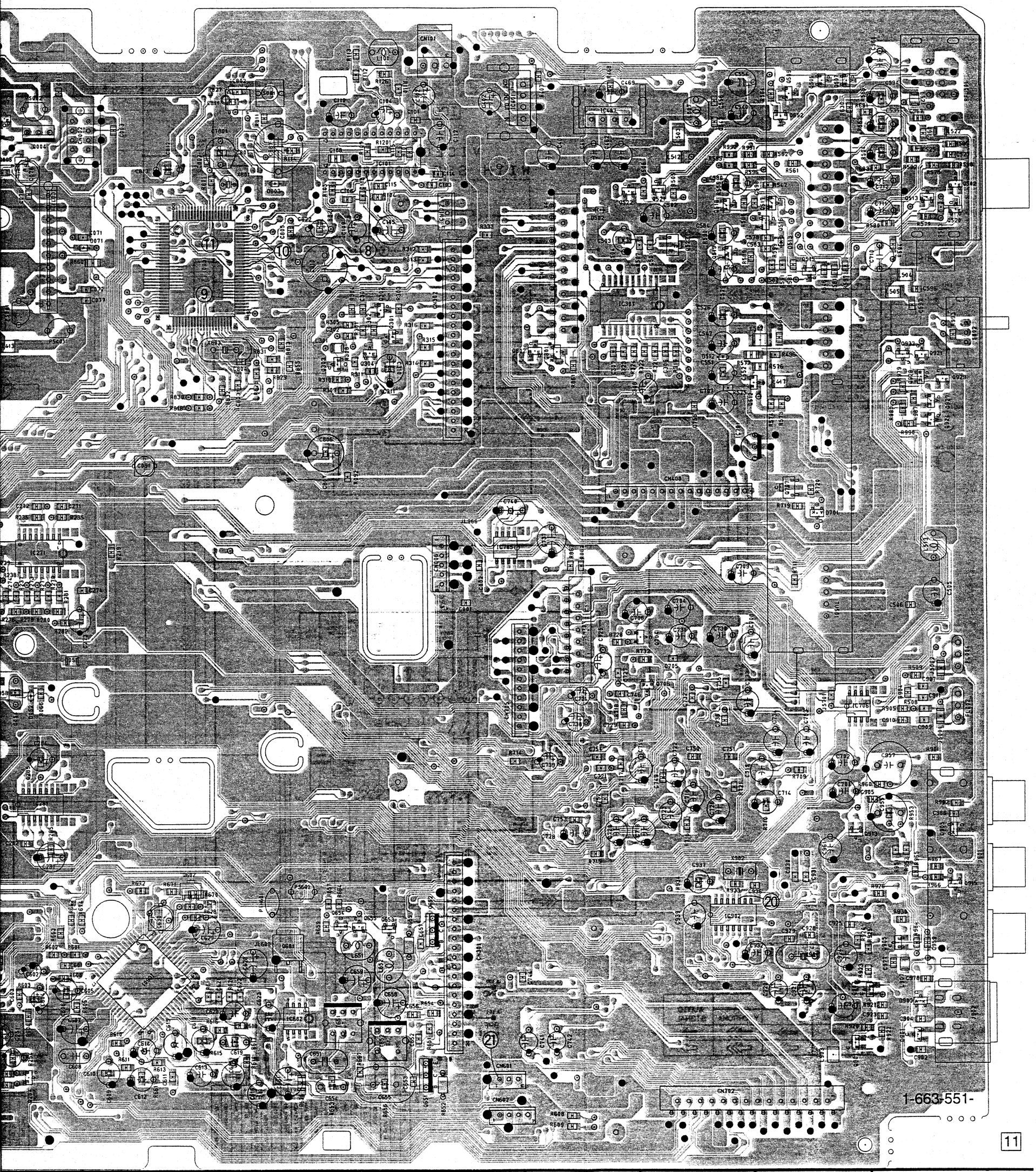
18
19
20
21
22
23
24
25
26
1-663-551-
11

MV-34 (PDC/VPS, VHS VIDEO, AUDIO) SCHEMATIC DIAGRAM
— Ref. No. MV-34 Board; 4,000 Series —

• See page 4-36 for MV-34 BOARD printed wiring board.

MV-34 BOARD (1/5)

NO MARK : COMMON MODE
VR : VHS REC MODE
VP : VHS PB MODE
8R : 8mm REC MODE
8P : 8mm PB MODE
8RP : 8mm REC/PB MODE
VRP : VHS REC/PB MODE

•SIGNAL PATH

	VIDEO SIGNAL			AUDIO SIGNAL
	CHROMA	Y	Y/CHROMA	
REC	➡	➡		
PB	⇨	⇨	⇨	

(2) TO(4/5) (SEE PAGE 4-51)

C12 g.VD
C2 ORC SETTE1
C3 SHARPNESS
B6 SSB DATA
B7 SSB CLK
C11 VHS FE S/V̄
P1 SW 9V
C1 JOG
C7 LP
V7 VHS ACK
C5 NOICAN
C4 YNR CONT

SW GND G1
V̄P̄B̄ C6
VHS C IN V5
VHS Y/V IN V4
VHS Y OUT V2
VHS C OUT V3
JL372
JL373

Q301 MSD601-RT1
Q302 MSD601-RT1
Q303 MSB709-RT1
Q304 MSD601-RT1
R301 33k
R302 1k
R303 1k
R304 10k
R305 680
R306 0
R307 0
R308 2200
R309 820
R310 150
R311 270
R312 0
R313 0
R314 0
R315 0
R316 0
R330 10k
R331 680
R332 680
R333 270k
C301 0.1u F
C302 30p
C303 0.1u F
C310 47u 16V
C311 0.01u B
L301 39uH
8RP1.1/VRP1.6
8RP1.2/VRP1.7
8RP0.5/VRP1.0

Q306 MSB709-RT1
6dB ATT
Q301-304 Y/C SEP

JL351 JL352 JL353 JL354 JL355 JL356 JL357 JL358 JL359 JL360 JL361 JL362 JL363 JL364 JL365 JL366 JL367 JL368 JL369

CN902 20P (D9368) 1-764-863-11

20	19	18	17	16	15	14	13	12	11	10	9	8	7	6	5	4	3	2	1
SW GND	VHS IN	VHS Y/V IN	G.VD	VHS Y OUT	ORC SETTE1	SHARPNESS	SSB DATA	S DET	SSB CLK	VHS C OUT	VHS FE S/V̄	SW 9V	V̄.B̄R̄	SW GND	JOG	LP	VHS ACK	NOICAN	YNR CONT

TO RV-50 BOARD CN902
(SEE PAGE 4-32)

IC301 PDC/VPS

IC301 SDA5649X-GEG

1	Vss	20	Vcc 5.1
2	Vss	19	Vcc 5.1
3	N.C	18	8RP1.1/VRP1.3
4	SCL 5.0	17	CYBS
5	SDA 5.0	16	IREF 1.5
6	GND	15	YCO1 8R4.2/8P4.8/VRP2.5
7	VCS	14	PD2/YCO2 8RP4.8/VRP2.5
8	N.C	13	N.C
9	DAV 5.0	12	PD1
10	EHB	11	GND

JL370 JL371

C304 0.22u B
C305 0.1u F
C306 2200p B
C307 2200p B
C308 10u 16V
C309 0.1u F
R317 100k
R318 2200
R319 680k
R321 6800
R322 1.2M
R323 6800
R324 1.2M
R325 1k
R326 27k
R327 18k
R328 100
Q305 MSB709-RT1

N1 SDA
N2 SCL
N3 D̄A̅V̄
G3 DGND
N5 D5V
N6 TU V

(1) TO(5/5)
(SEE PAGE 4-53)

(4) TO(4/5) (SEE PAGE 4-50)
(3) TO(4/5) (SEE PAGE 4-50)

MV-34
FULL ERASE HEAD

MV-34 BOARD (3/3)

(21) CN601 ① REC
67.5kHz 54Vp-p

MV-34 BOARD(2/5)

•SIGNAL PATH

	VIDEO SIGNAL			AUDIO SIGNAL
	CHROMA	Y	Y/CHROMA	
REC				➡
PB				⇨

NO MARK : COMMON MODE
VR : VHS REC MODE
VP : VHS PB MODE
8R : 8mm REC MODE
8P : 8mm PB MODE
8RP : 8mm REC/PB MODE
VRP : VHS REC/PB MODE

Note:
The components indentified by mark ⚠ or dotted line with mark ⚠ are critical for safety.
Replace only with part number specified.

IC602 REC/PB SELECT SW

PB EQ

IC601 AUDIO REC/PB AMP

CN602 4P: A HEAD PB, A HEAD REC, GND (AU), A ERASE HEAD
CN601 3P: GND(AU), HF ADJ, FE HEAD
FULL ERASE HEAD

Q501 2SD1802FAS-TL +5V SW
Q502 2SB1122-ST-TD -5V SW
Q503 DTA114TK
Q652 2SC4040-TL2-Q
Q651 2SC4040-TL2-Q
Q654 DTA114TK
Q655 MSD601-RT1
Q631 MA111-TX
IC501 XLH7779K-E2

OUTPUT SWITCH, INPUT SWITCH, DATA DECODER, MIX AMP, REG, REC EQ, EQ, RECAMP, ALC, AMP, SW, ATT, LINE AMP, MODEM, HIFI DET, D.D. COM., FMBPF, ENVELOPE, PNR R, PNR L, PB, EQ

Y4 AF REC RF
D2 AF SMP
Y3 AF PB RF
JL618 +5V
JL620 -5V
JL619

TO 2/5: D5 AF ENV, B7 SSB CLK, B6 SSB DATA, D4 A MUTE
A8 TU STD → 8 TO(3/5) (SEE PAGE 4-46)
A5 VHS L IN (JL617)
A5 VHS R IN (JL616)
A3 VHS L OUT (JL615)
A4 VHS R OUT (JL614) → 5 TO(4/5) (SEE PAGE 4-50)

1 TO(5/5) (SEE PAGE 4-53): N1 SDA, N2 SCL, N3 DAV, G3 DGND, N5 D5V, N6 TU V
4 TO(4/5) (SEE PAGE 4-50)
3 TO(4/5) (SEE PAGE 4-50): INA REC P Y1, VA ADJ Y5
AU GND G2, SW 12V P2, SW-8V P4
FULL ERASE OSC

MV-34 BOARD (3/3)

21 CN601 ① REC
67.5kHz 54Vp-p

MV-34 (TUNER) SCHEMATIC DIAGRAM

— Ref. No. MV-34 Board; 4,000 Series —

• See page 4-36 for MV-34 BOARD printed wiring board.

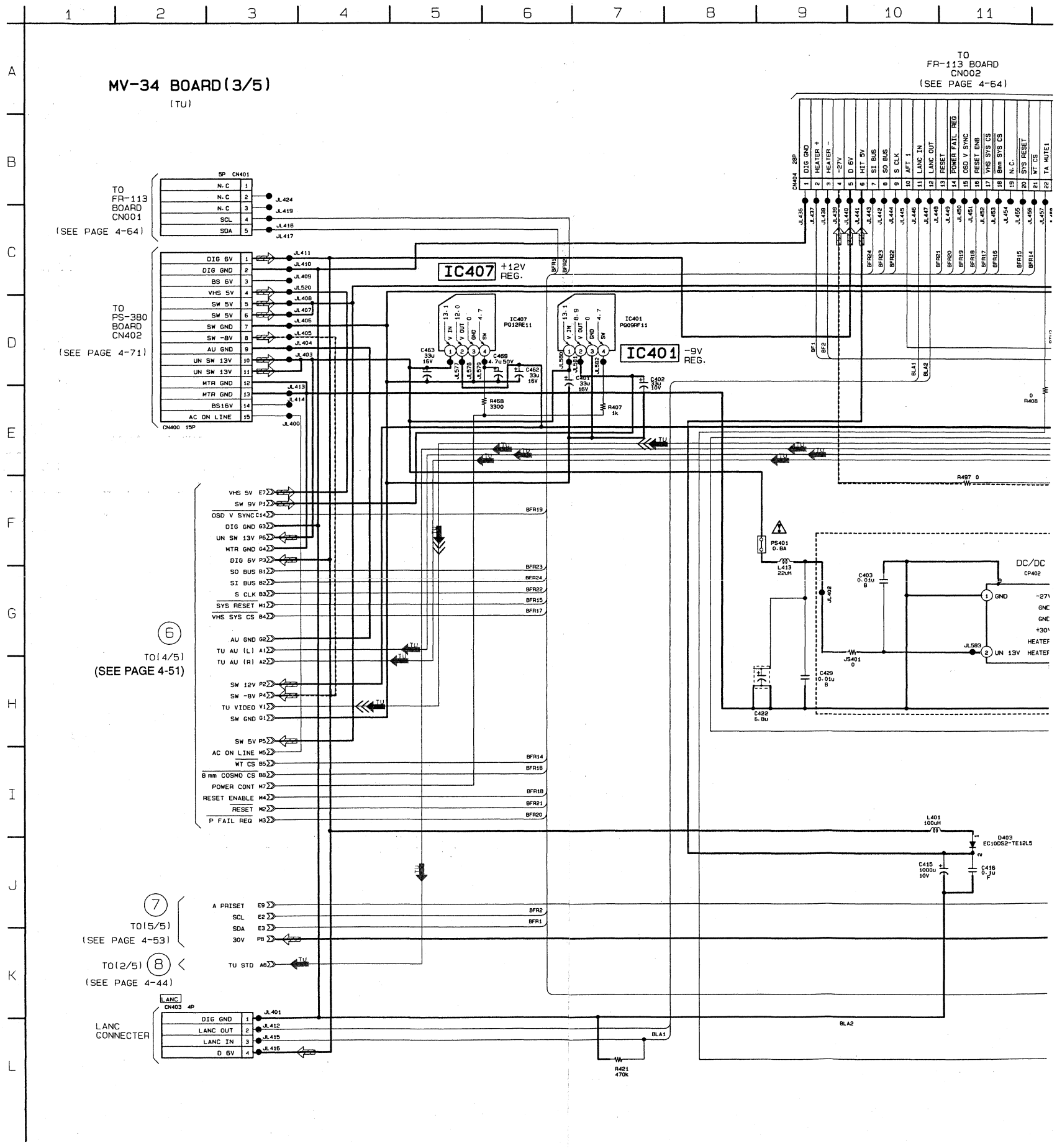

oard.

8 | 9 | 10 | 11 | 12 | 13 | 14 | 15 | 16 | 17 | 18 | 19 | 20 | 21 | 22 | 23

TO
FR-113 BOARD
CN002
(SEE PAGE 4-64)

CN404 28P
1 DIG GND
2 HEATER +
3 HEATER −
4 -27V
5 D 6V
6 HIT 5V
7 SI BUS
8 SO BUS
9 S CLK
10 AFT 1
11 LANC IN
12 LANC OUT
13 RESET
14 POWER FAIL REQ
15 OSD V SYNC
16 RESET ENB
17 VHS SYS CS
18 8mm SYS CS
19 N.C.
20 SYS RESET
21 WT CS
22 TA MUTE1
23 PLL CLK 1
24 PLL DATA 1
25 PLL ENB 1
26 TU V DET1
27 B/G/L
28 B/G L/L'

•SIGNAL PATH

	VIDEO SIGNAL			AUDIO SIGNAL
	CHROMA	Y	Y/CHROMA	
REC			➡⋙	➡
PB				⇨

NO MARK : REC/PB MODE
R : REC MODE
P : PB MODE

Note:
The components indentified by mark ⚠ or dotted line with mark ⚠ are critical for safety.
Replace only with part number specified.

DC/DC CP402
GND −27V
GND
GND
+30V
HEATER −
UN 13V HEATER +

Q515-518 TU VIDEO DET.
Q515 MSB709-RT1
Q516 MSD601-RT1
Q517 UN2213-TX
Q518 UN2213-TX
Q513 MA111-TX
Q512 2SC2712Y-TE85L BUFF
Q502 MSB709-RT1 BUFF
Q513 MSB709-RT1 BUFF
Q520 UN2211-TX SW
Q506 UN2211-TX SW
Q552 UN2113-TX SWITCH
Q505 UN2225T-(TX)
Q507 UN2225T-(TX)
Q509 UN2225T-(TX)
Q505·507·509 TA MUTE

TU501
30VOUT
5V
CLOCK
DATA
ENABLE
RF AGC
IF
NC
AF1
5V
SIF
NC
VDET1
SCL
SDA
B/G/L
B/G/L'
NC
NC
M OUT
R OUT
L OUT

MV-34 (VHS SERVO/SYSTEM CONTROL) SCHEMATIC DIAGRAM

— Ref. No. MV-34 Board; 4,000 Series —

• See page 4-36 for MV-34 BOARD printed wiring board.

MV-34 BOARD (1/3)

① IC201 ⑥⑦ PB

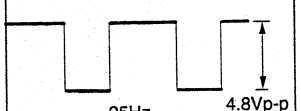

② IC201 ⑥⑧ REC/PB

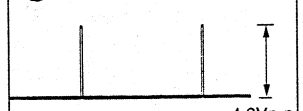

③ IC201 ⑥⑨ REC/PB

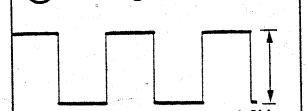

④ IC201 ⑦⓪ REC/PB

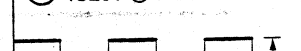

⑤ IC201 ① REC/PB

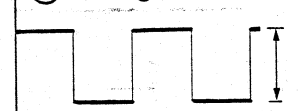

⑥ IC201 ⑦ REC

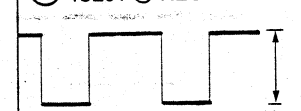

⑦ IC201 ㊷ EE

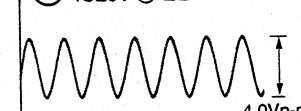

⑧ IC101 ⑦ REC

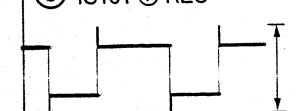

NO MARK : COMMON MODE
VR : VHS REC MODE
VP : VHS PB MODE
8R : 8mm REC MODE
8P : 8mm PB MODE
8RP : 8mm REC/PB MODE
VRP : VHS REC/PB MODE

•SIGNAL PATH

	VIDEO SIGNAL			AUDIO SIGNAL
	CHROMA	Y	Y/CHROMA	
REC	➡	➡	➡	➡
PB	⇨	⇨		⇨

Note:
The components indentified by mark ⚠ or dotted line with mark ⚠ are critical for safety.
Replace only with part number specified.

MV-34 BOARD (4/5)

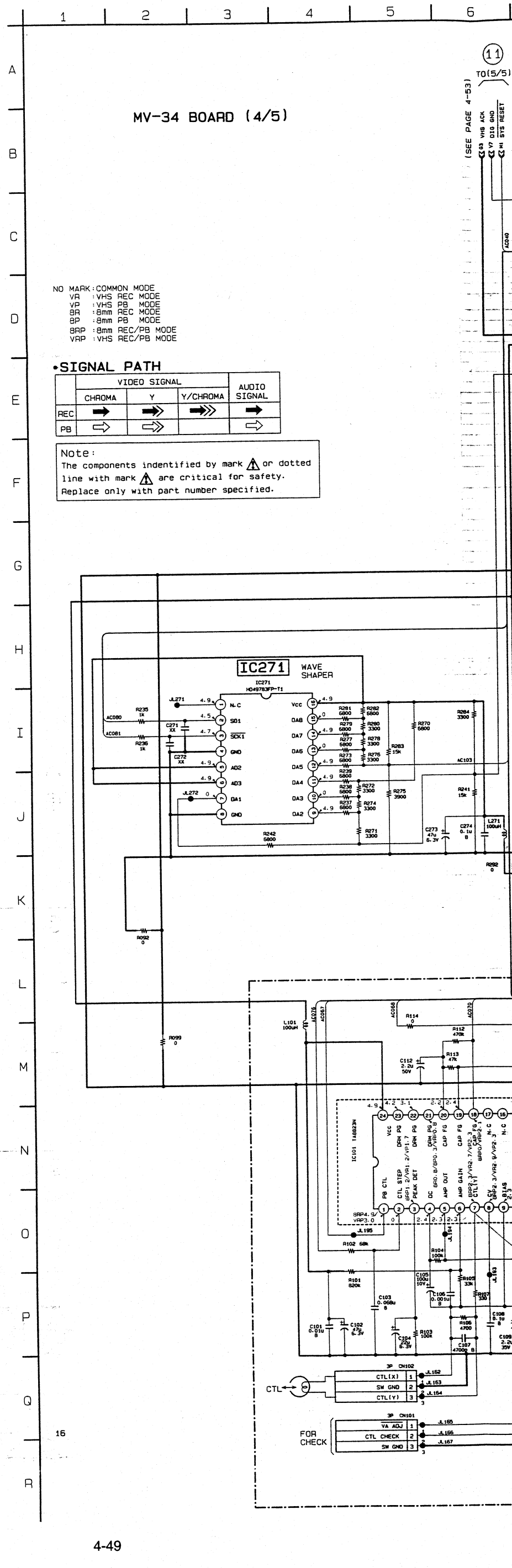

printed wiring board.

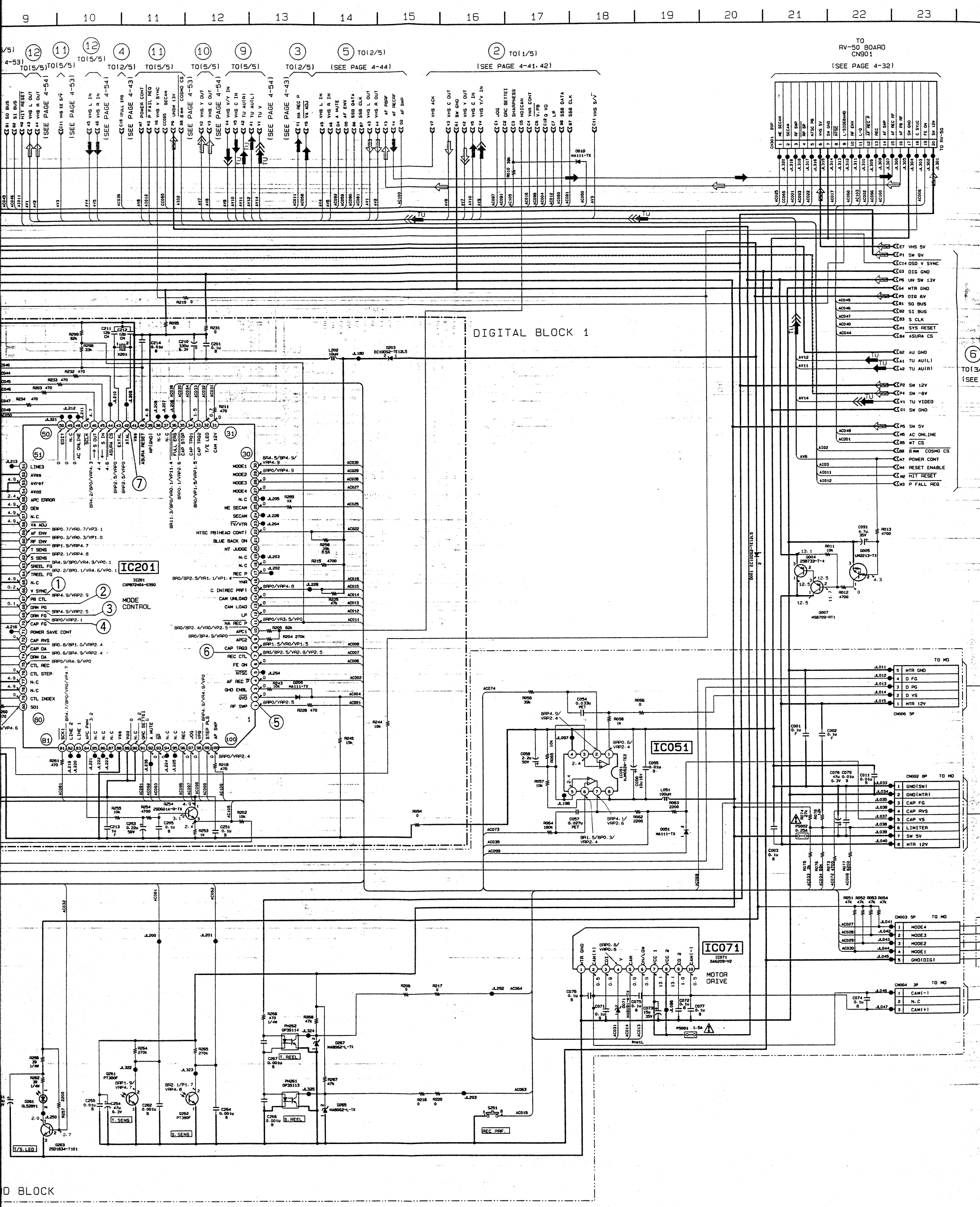

• See page 4-36 for MV-34 BOARD printed wiring board.

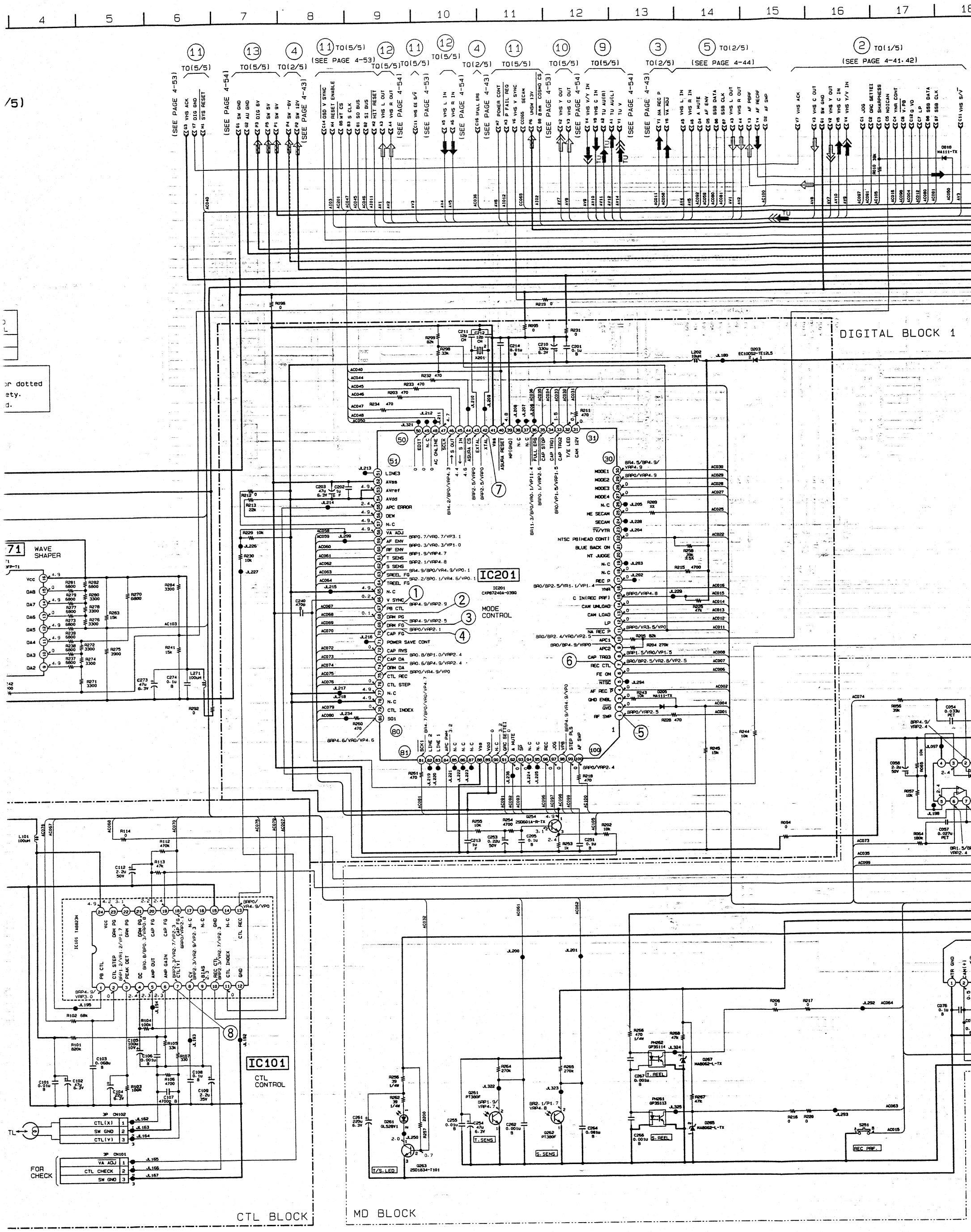

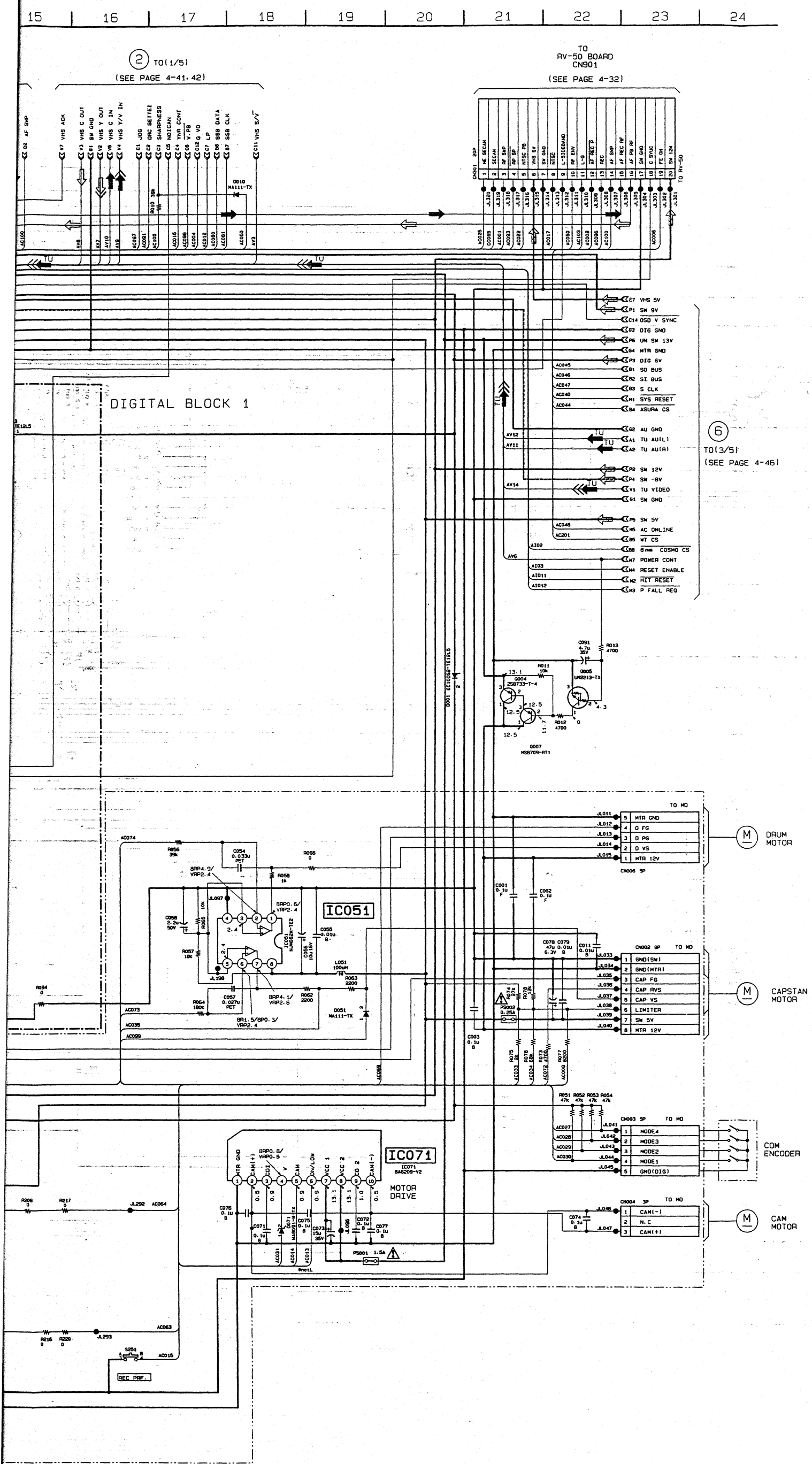
15
16
17
18
19
20
21
22
23
24
DIGITAL BLOCK 1
2 TO(1/5)
(SEE PAGE 4-41, 42)
TO
RV-50 BOARD
CN901
(SEE PAGE 4-32)
CN301 20P
TO RV-50
6
TO(3/5)
(SEE PAGE 4-46)
IC051
IC071
IC071
8A6209-V2
MOTOR
DRIVE
TO MD
DRUM
MOTOR
CAPSTAN
MOTOR
COM
ENCODER
CAM
MOTOR
CN006 5P
CN002 8P
CN003 5P
CN004 3P
REC PRF.

MV-34 (MODE CONTROL, IN/OUT SELECTOR) SCHEMATIC DIAGRAM

— Ref. No. MV-34 Board; 4,000 Series —

• See page 4-36 for MV-34 BOARD printed wiring board.

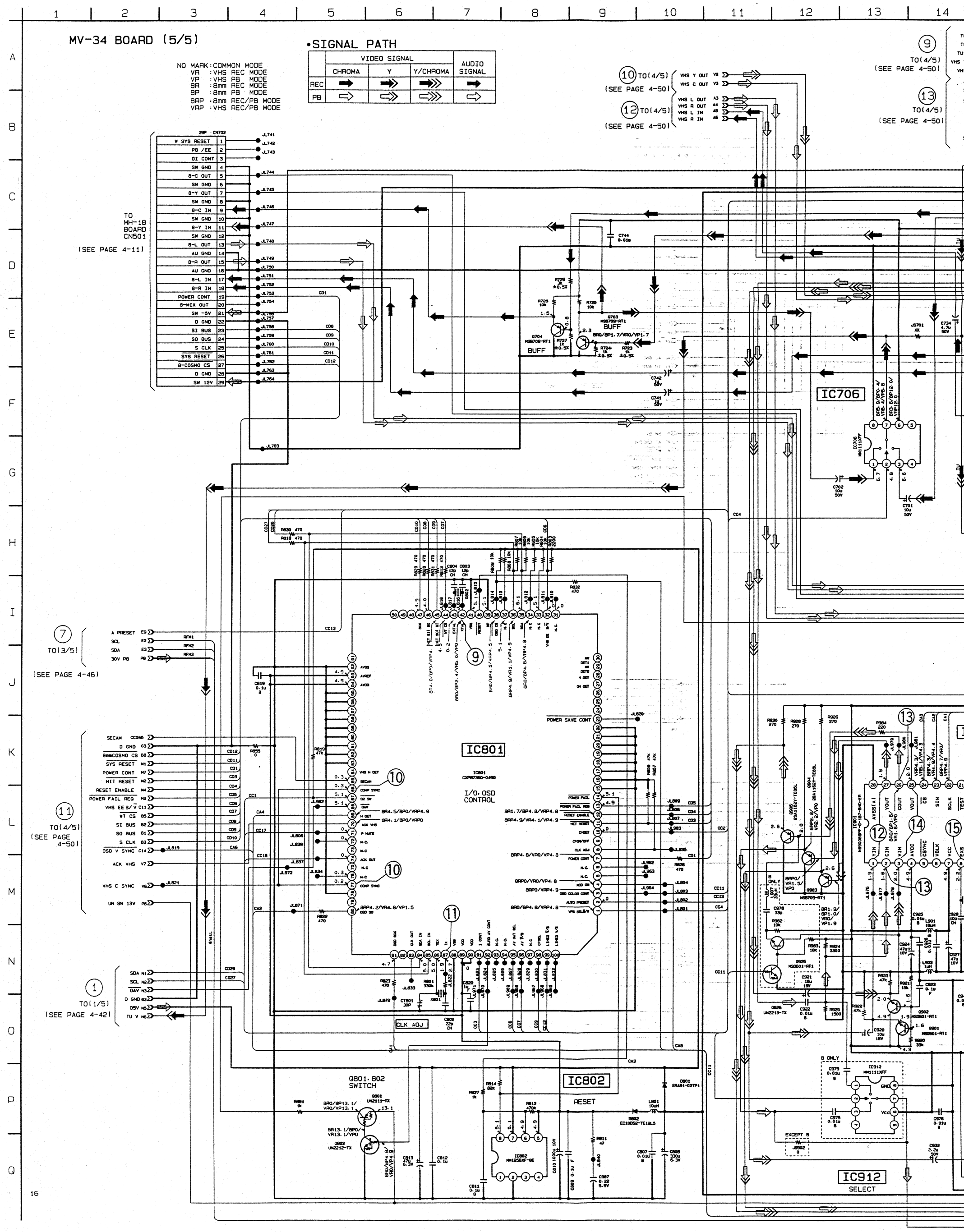

rinted wiring board.

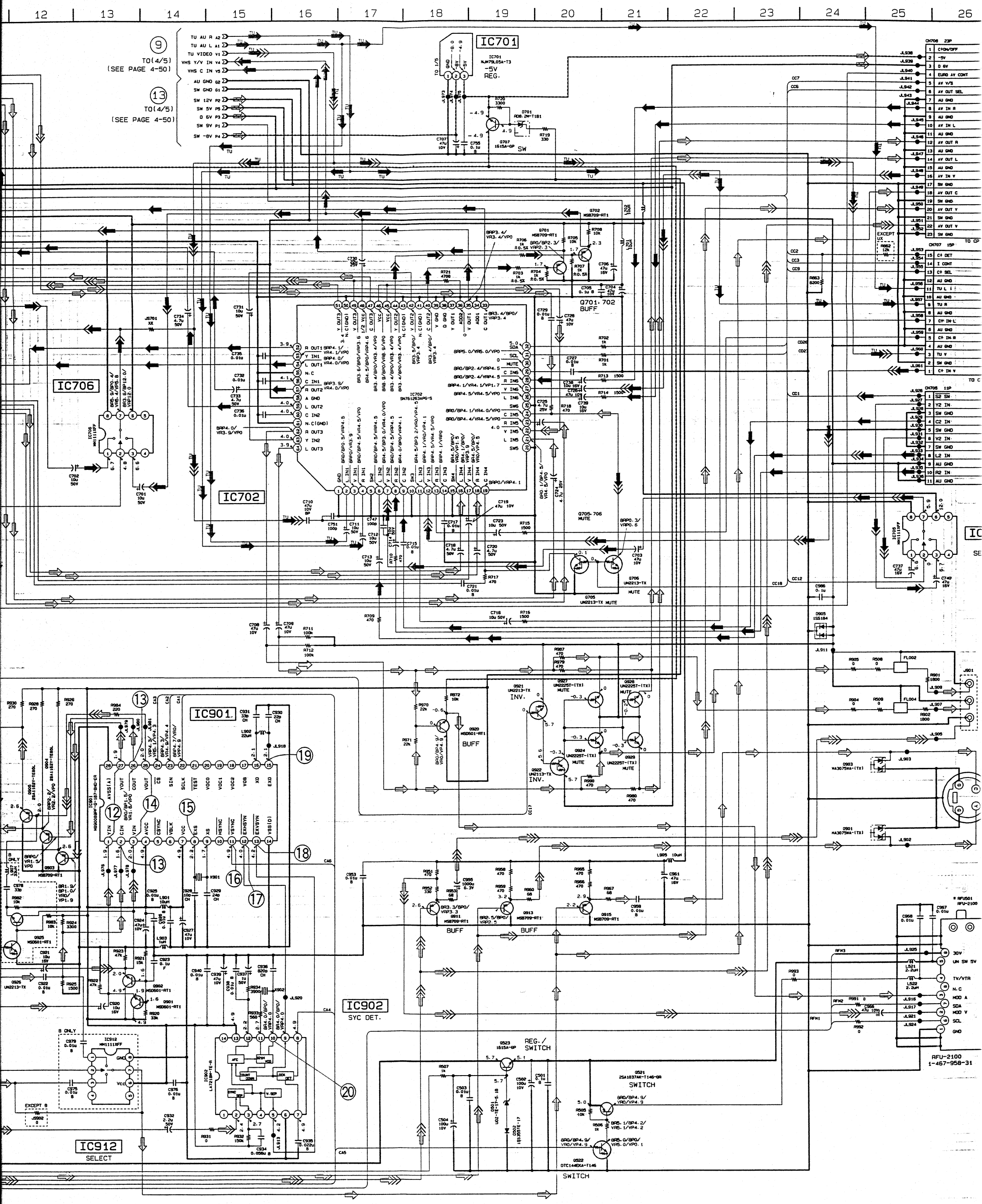

• See page 4-36 for MV-34 BOARD printed wiring board.

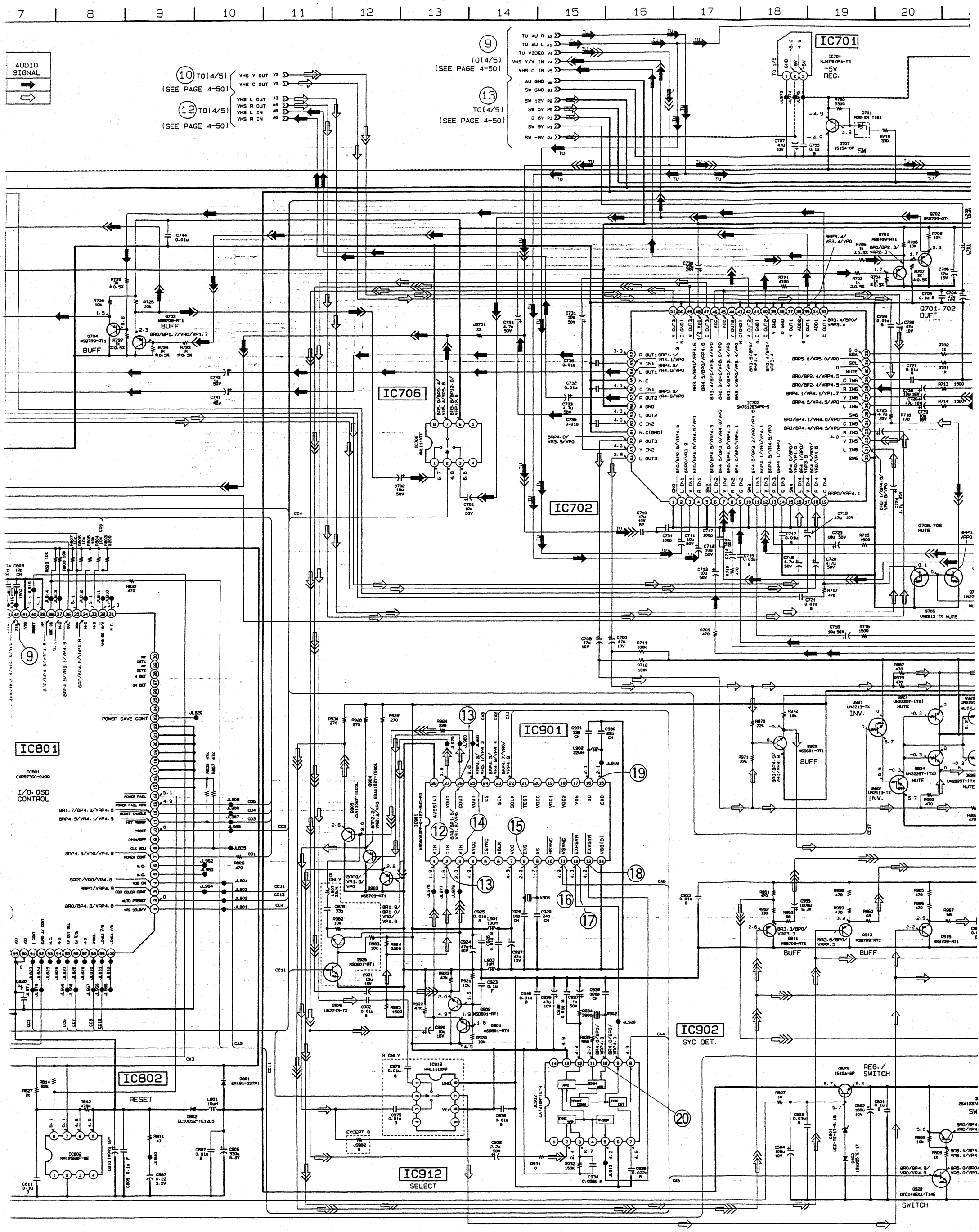

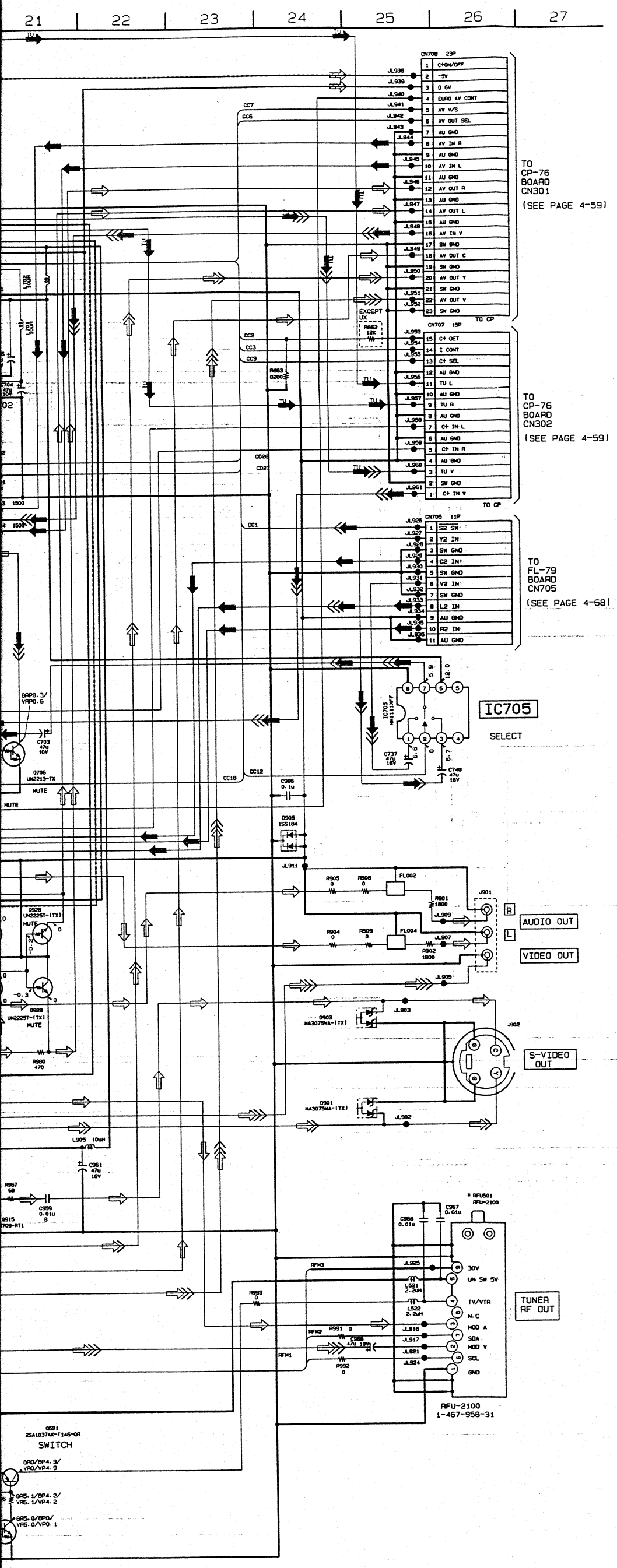

MV-34 BOARD (2/3)

⑨ IC801 ㊷ EE 16MHz 4.2Vp-p	⑮ IC901 ⑧ EE 17.73MHz 5.6Vp-p
⑩ IC801 ㊻, ㊼ EE H 3.8Vp-p	⑯ IC901 ⑪ REC/PB V 4.5Vp-p
⑪ IC801 ㊼ EE 32.7kHz 4Vp-p	⑰ IC901 ⑫ REC/PB H 4.2Vp-p
⑫ IC901 ①, ㉗ REC H 1.7Vp-p	⑱ IC901 ⑬ REC/PB V 3.9Vp-p
⑬ IC901 ②, ㉖ REC H 1.5Vp-p	⑲ IC901 ⑮ REC/PB 6.52MHz 5.5Vp-p
⑭ IC901 ③, ㉕ REC H 2.3Vp-p	⑳ IC902 ⑩ EE 500kHz 0.6Vp-p

CP401 POWER BLOCK (SR665)

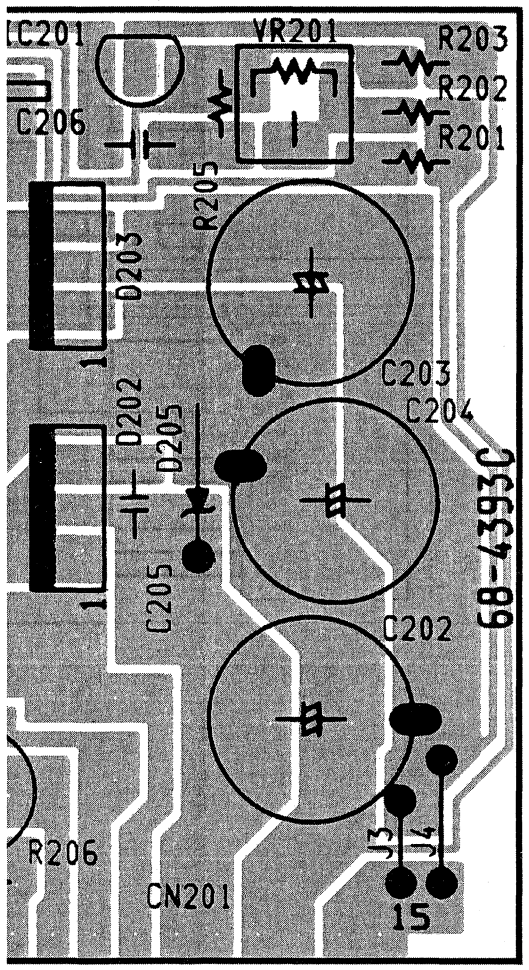

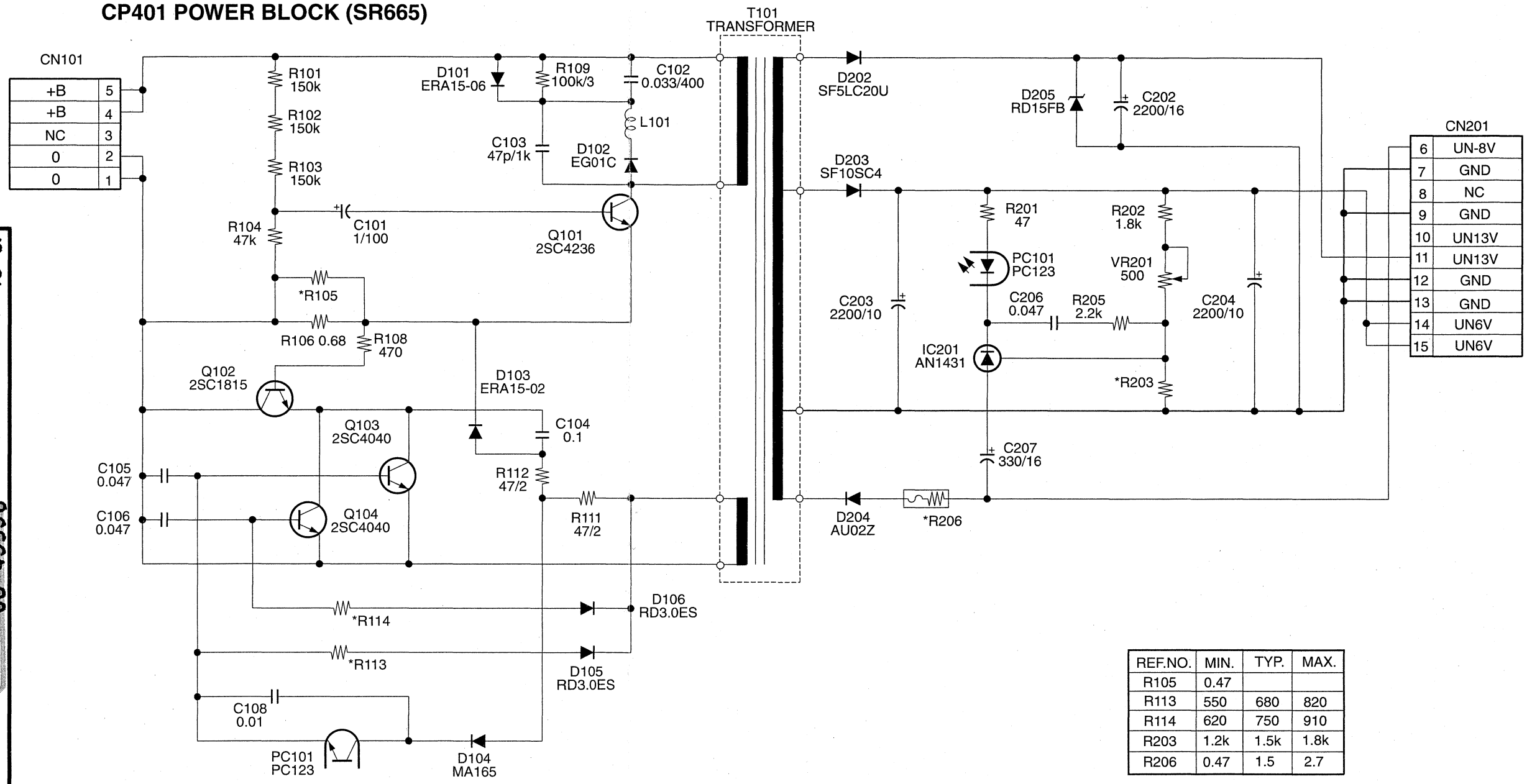

REF.NO.	MIN.	TYP.	MAX.
R105	0.47		
R113	550	680	820
R114	620	750	910
R203	1.2k	1.5k	1.8k
R206	0.47	1.5	2.7

P-401 POWER BLOCK (SWITCHING REGULATOR SR665) PRINTED WIRING BOARD AND SCHEMATIC DIAGRAM
- Ref. No. SR665 Board; 7,000 Series —

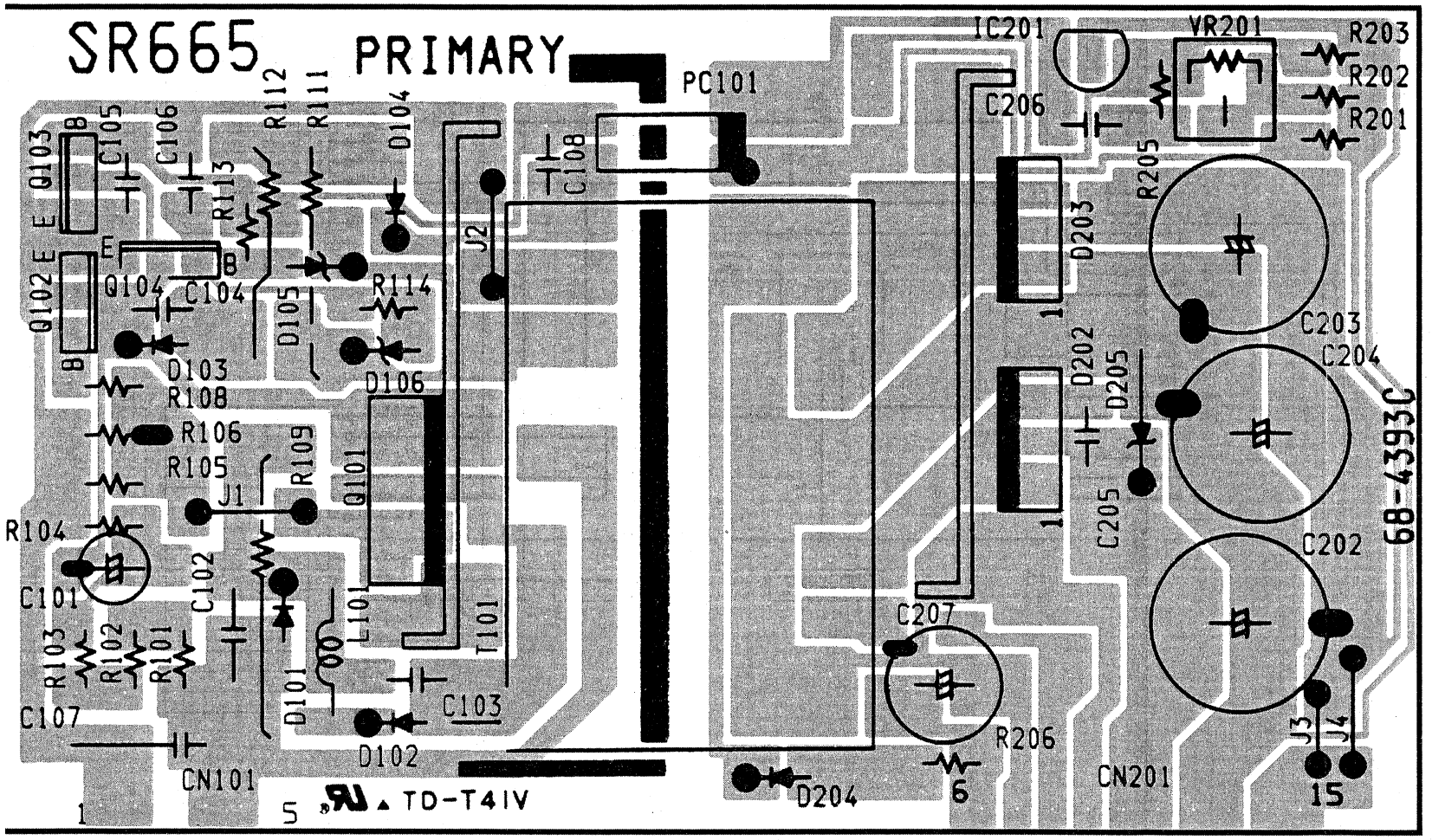

CP401 POWER BLOCK (SR665)

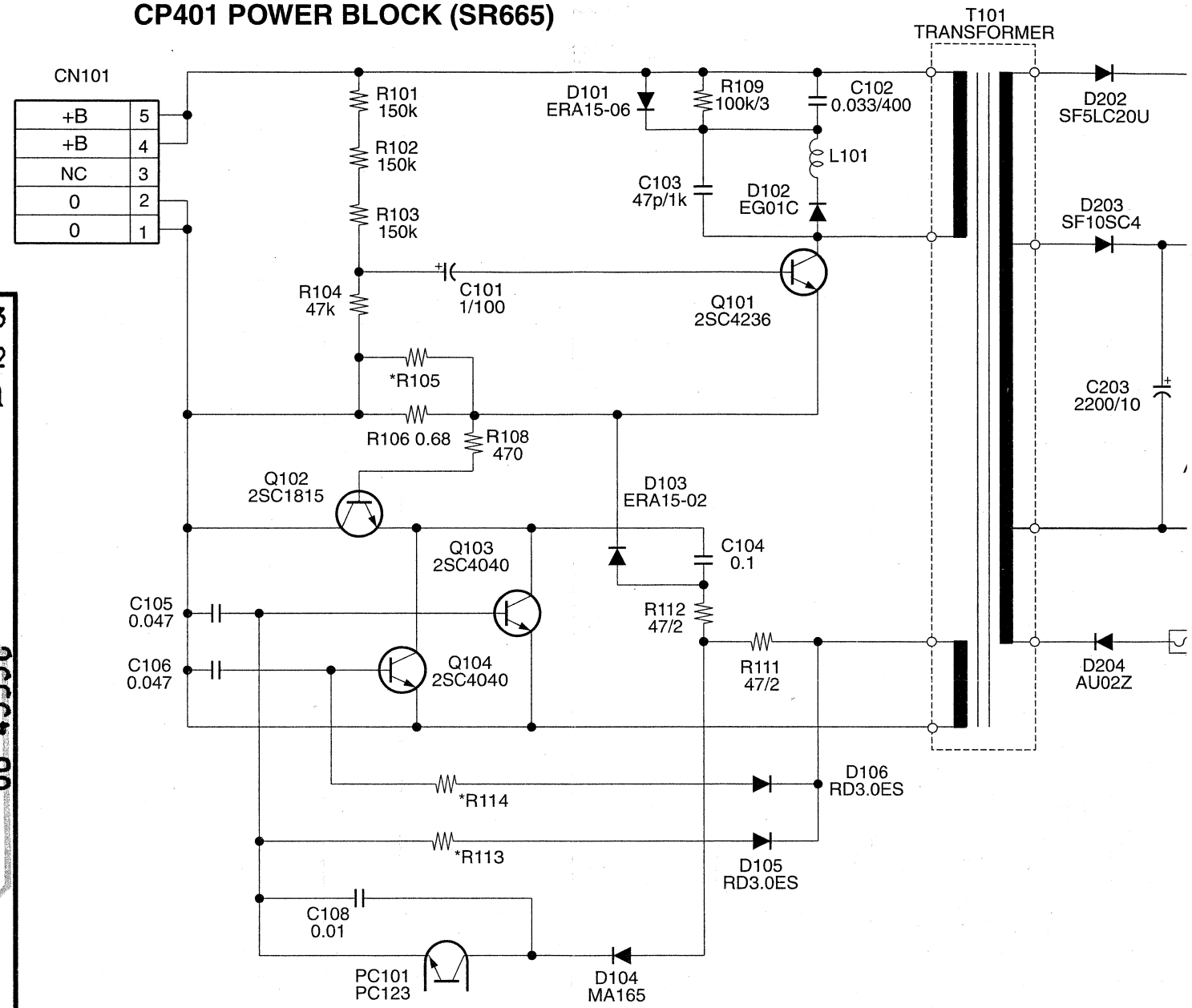

• See page 4-72 for the CP401 power block printed wiring board diagram.

There are few cases that the part printed on this diagram isn't mounted in this model.

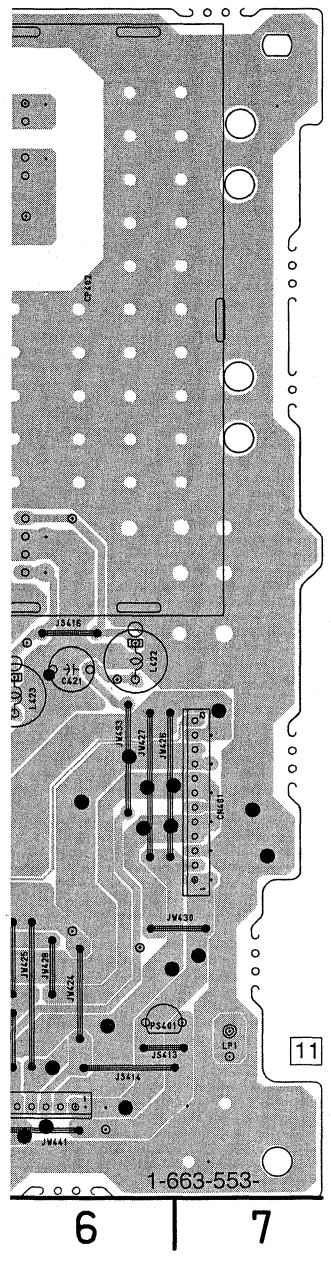

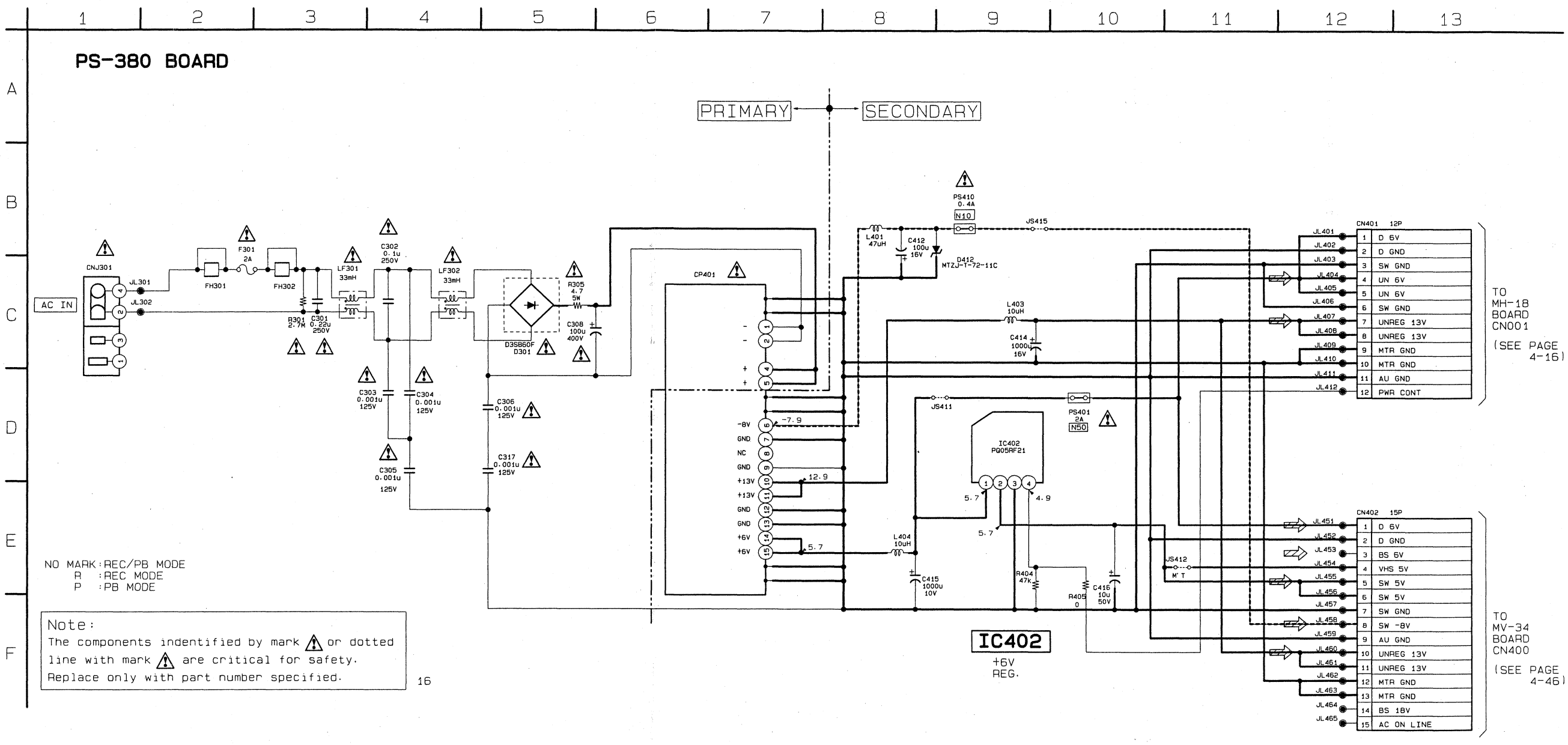

POWER SUPPLY
PS-380

PS-380 (POWER SUPPLY) PRINTED WIRING BOARD AND SCHEMATIC DIAGRAM
— Ref. No. PS-380 Board; 6,000 Series —

PS-380 BOARD (CONDUCTOR SIDE)

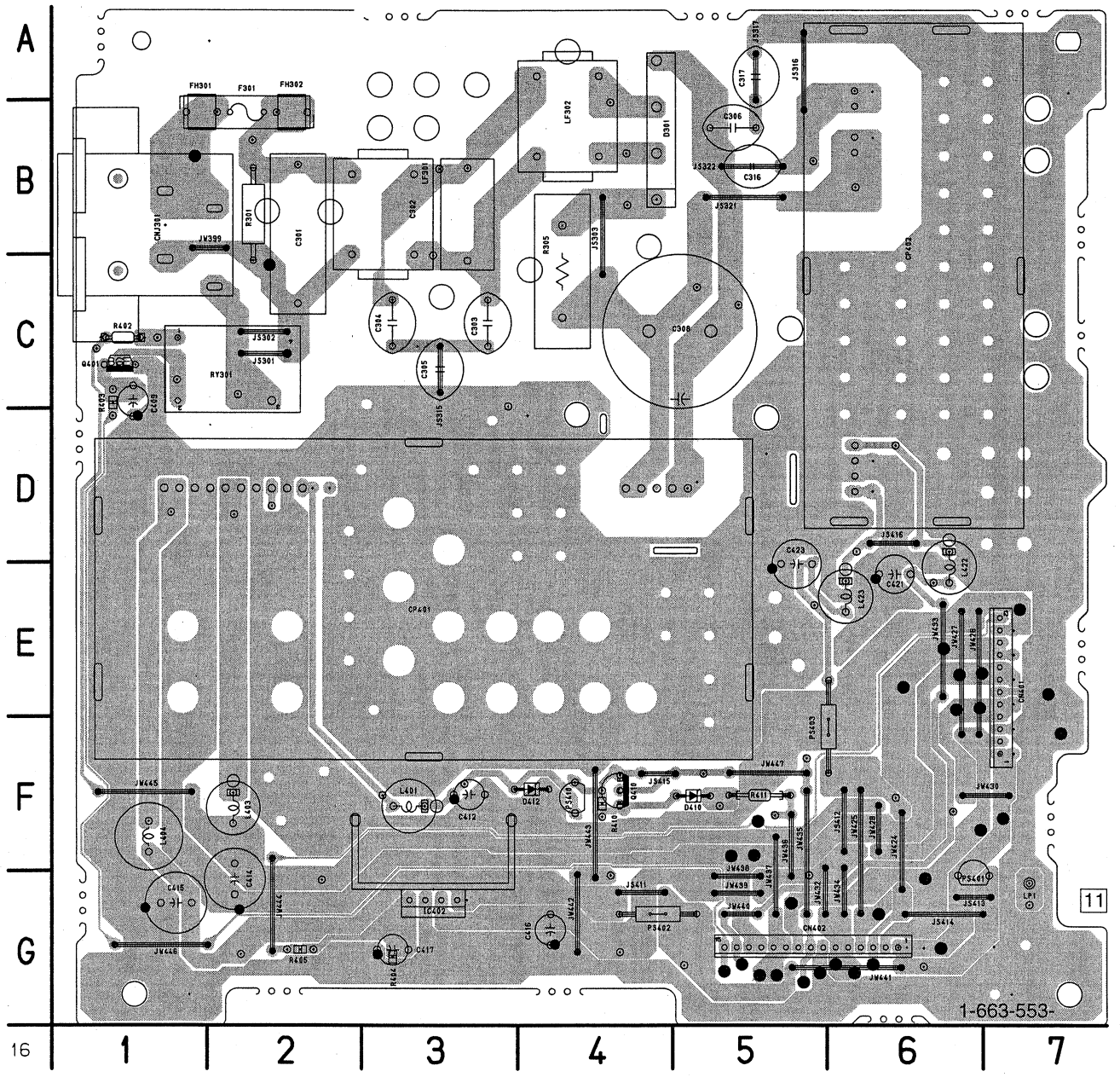

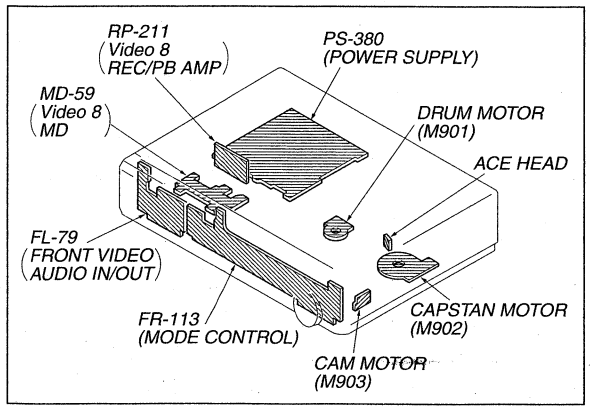

• See page 4-72 for the CP401 power block printed wiring board diagram.

There are few cases that the part printed on this diagram isn't mounted i

PS-380 BOARD

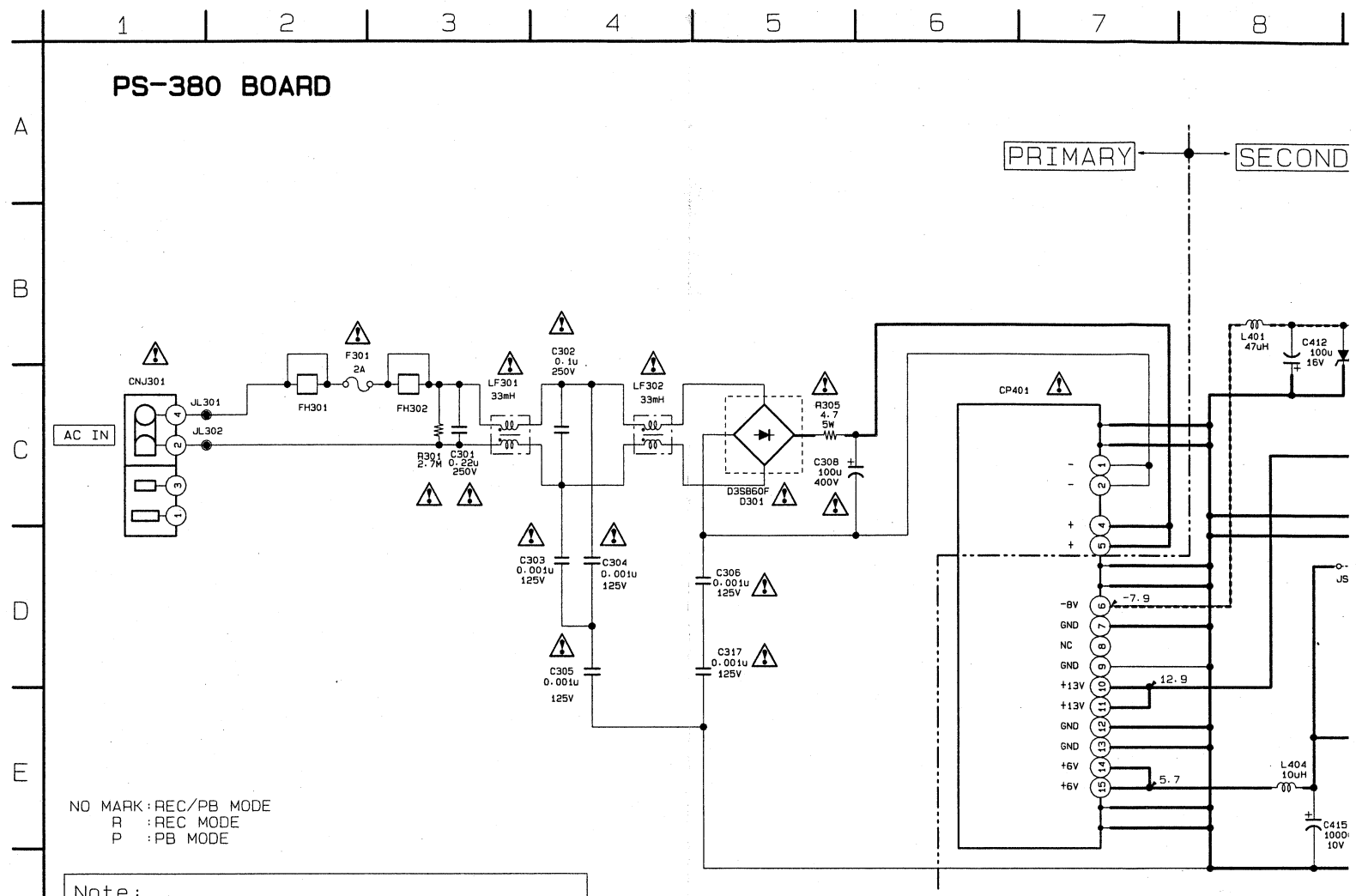

NO MARK : REC/PB MODE
R : REC MODE
P : PB MODE

Note:
The components indentified by mark ⚠ or dotted line with mark ⚠ are critical for safety.
Replace only with part number specified.

16

FL-79 (FRONT VIDEO, AUDIO IN/OUT) PRINTED WIRING BOARD AND SCHEMATIC DIAGRAM

— Ref. No. FL-79 Board; 6,000 Series —

FL-79 BOARD (CONDUCTOR SIDE)

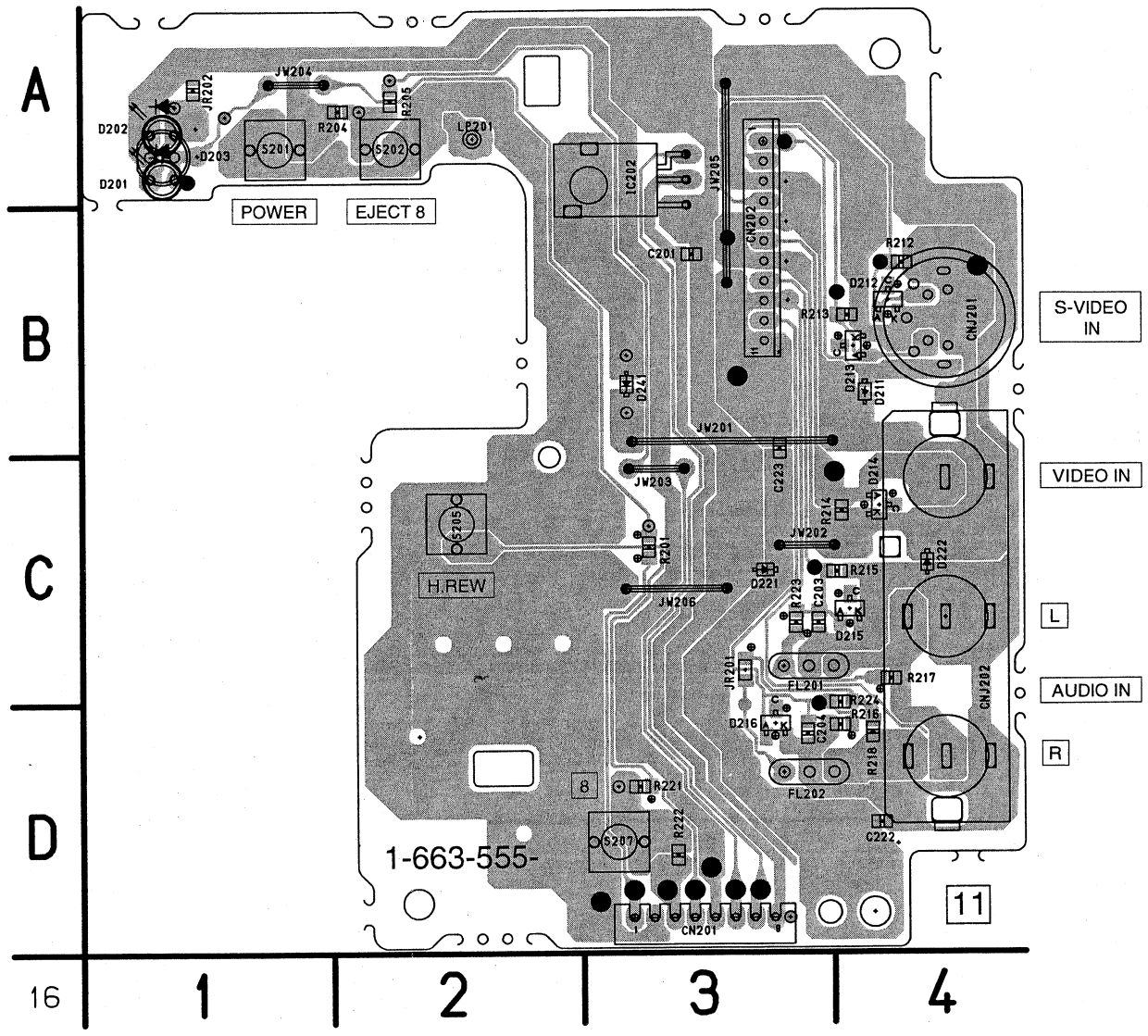

There are few cases that the part printed on this diagram isn't mounted in this model.

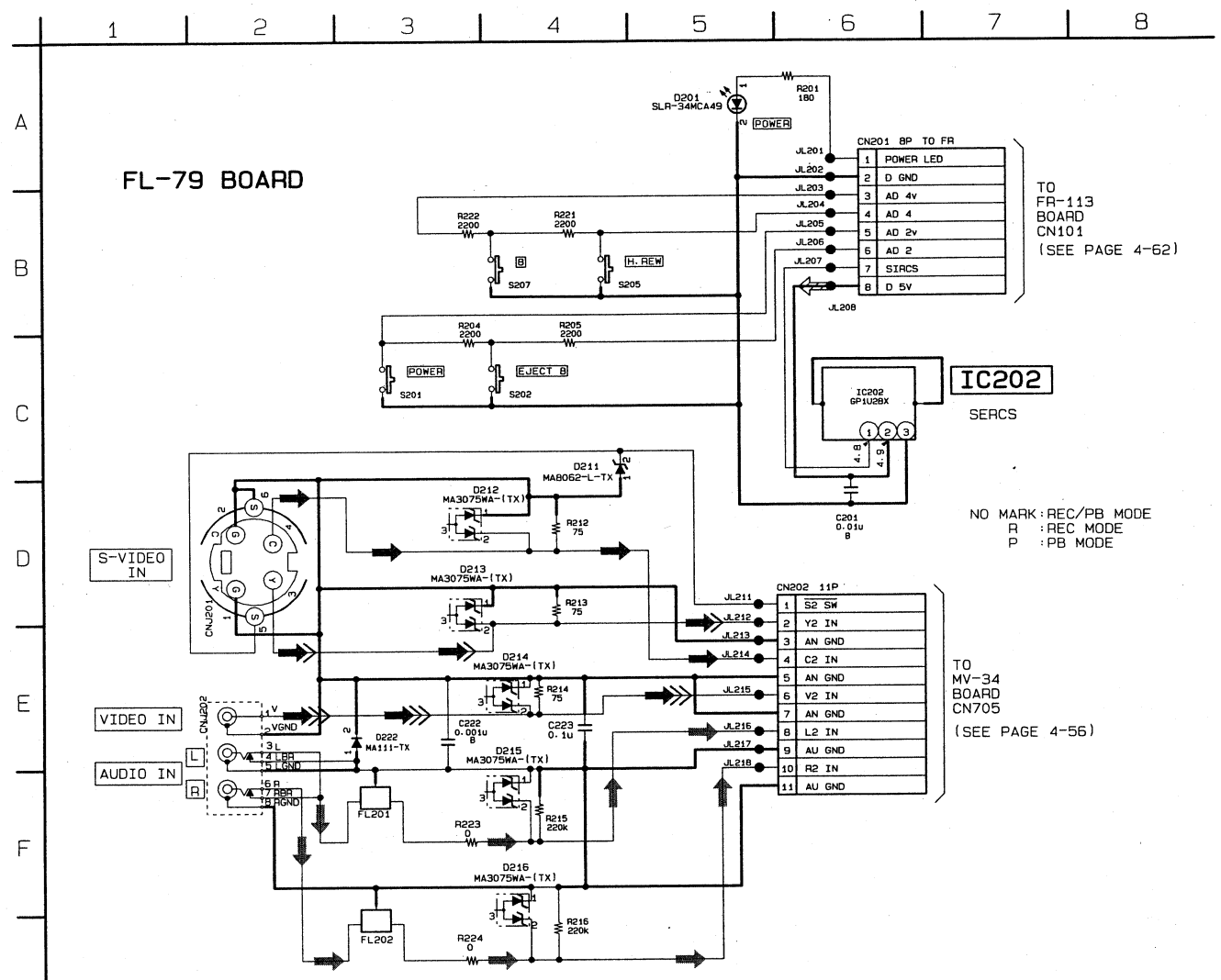

•SIGNAL PATH

	VIDEO SIGNAL			AUDIO SIGNAL
	CHROMA	Y	Y/CHROMA	
REC	→	→»	→»»	→
PB				

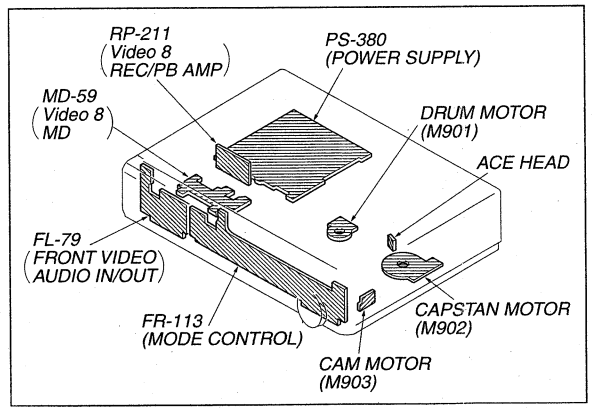

FRONT VIDEO, AUDIO IN/OUT
FL-79

FR-113 (MODE CONTROL) PRINTED WIRING BOARD
— Ref. No. FR-113 Board; 6,000 Series —

There are few cases that the part printed on this diagram isn't mounted in this model.

FR-113 BOARD (CONDUCTOR SIDE)

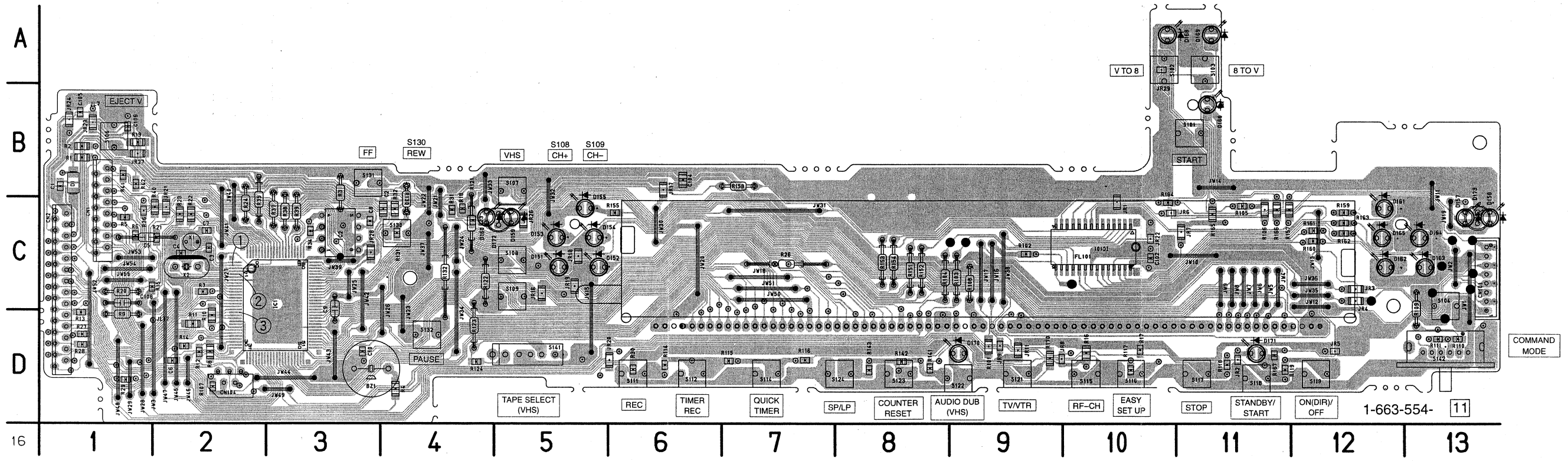

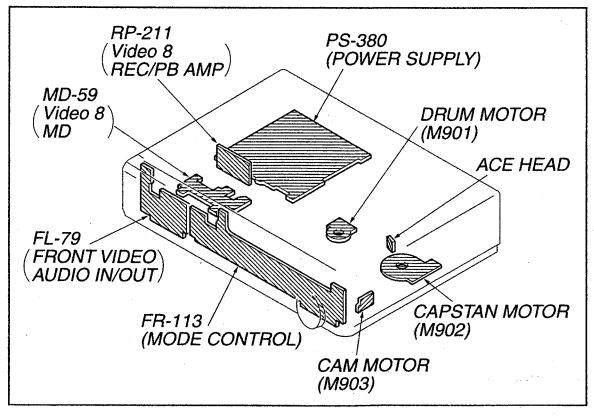

ed wiring board.

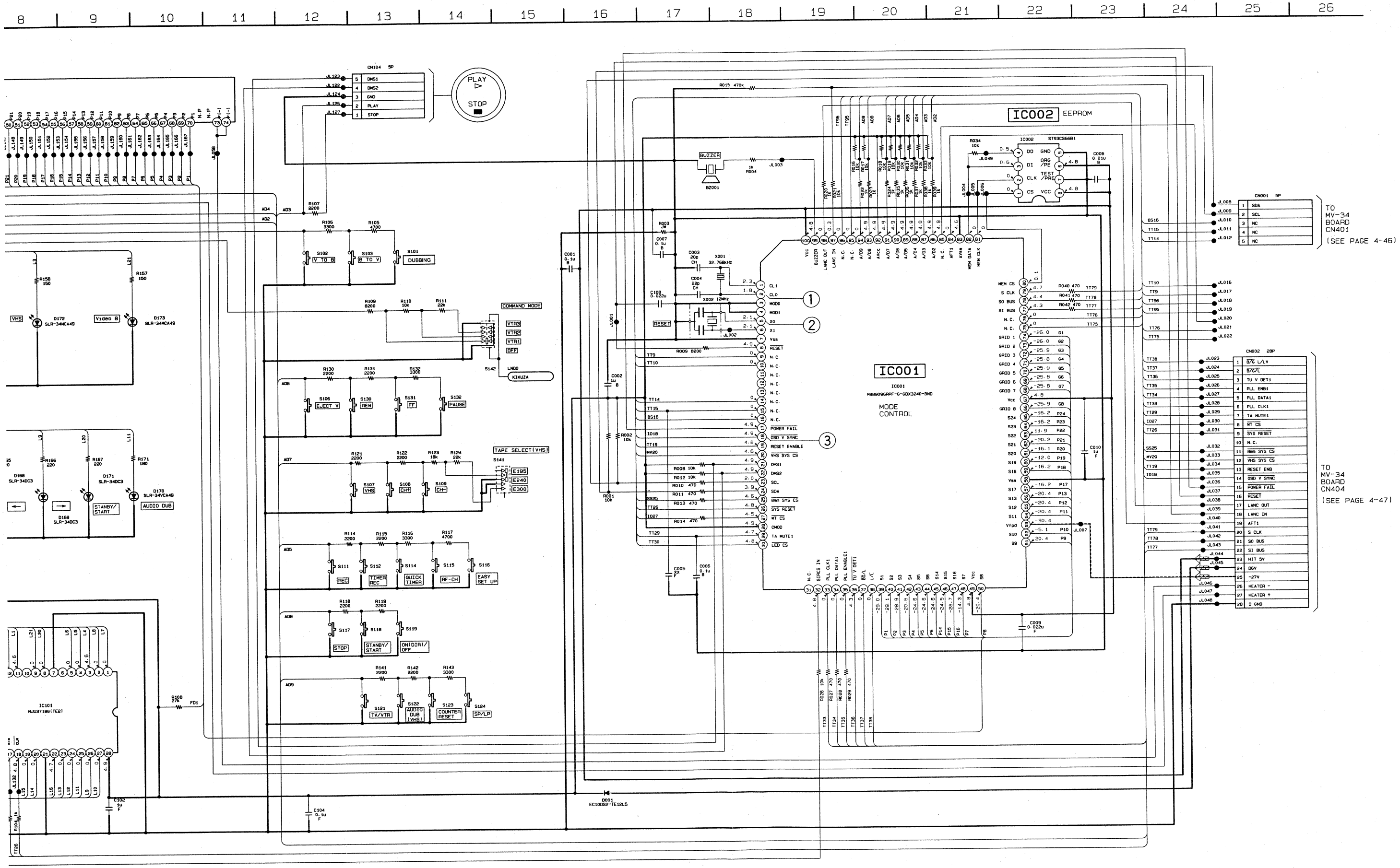

FR-113 BOARD

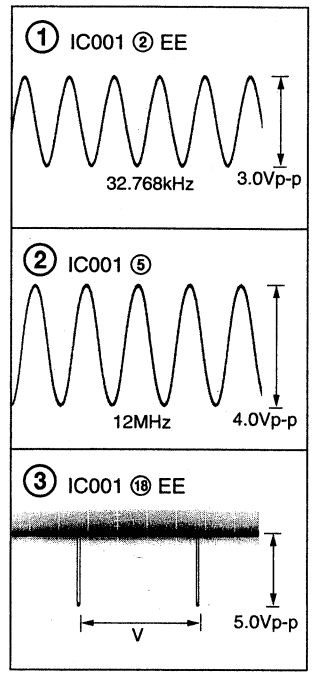

FR-113 (MODE CONTROL) SCHEMATIC DIAGRAM

— Ref. No. FR-113 Board; 6,000 Series —

• See page 4-65 for FR-113 BOARD printed wiring board.

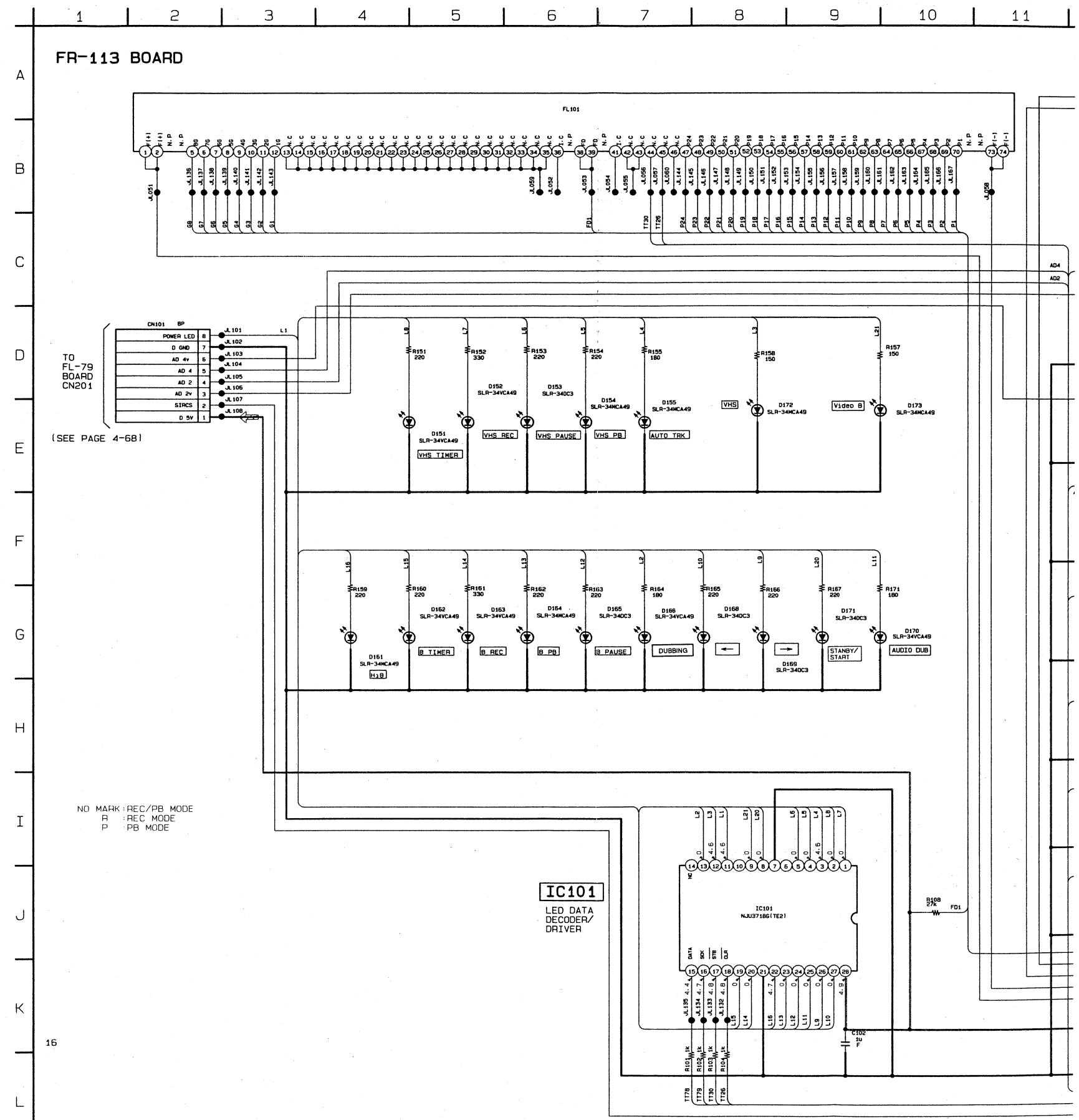

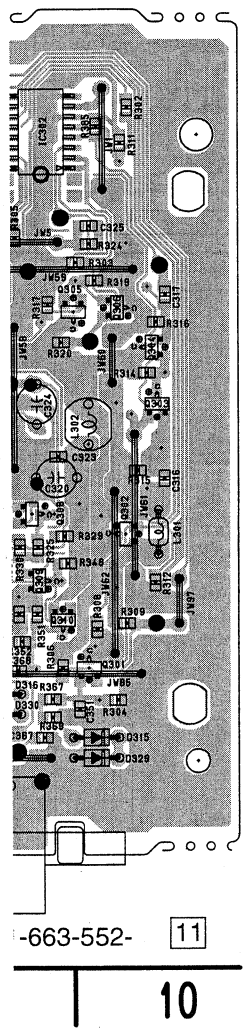

-663-552- 11

10

CP-76 BOARD

TO MV-34 BOARD CN708 (SEE PAGE 4-56)

TO MV-34 BOARD CN707 (SEE PAGE 4-56)

IC302 SELECT SWITCH

IC303 +5V REG

IC305 SELECT SWITCH

IC306 SELECT SWITCH

IC307 SELECT SWITCH

IC308 SELECT SWITCH

IC309 AMP

IC310 AMP

Q303, 304 AMP

Q305, 306 BUFF

•SIGNAL PATH

	VIDEO SIGNAL			AUDIO SIGNAL
	CHROMA	Y	Y/CHROMA	
REC			➡	➡
PB	⇨	⇨	⇨	⇨

NO MARK : COMMON MODE
VR : VHS REC MODE
VP : VHS PB MODE
8R : 8mm REC MODE
8P : 8mm PB MODE
8RP : 8mm REC/PB MODE
VRP : VHS REC/PB MODE

AV/LINE1

C+

CHASSIS GND

CP-76 (VIDEO, AUDIO IN/OUT) PRINTED WIRING BOARD AND SCHEMATIC DIAGRAM

— Ref. No. CP-76 Board; 5,000 Series —

There are few cases that the part printed on this diagram isn't mounted in this model.

CP-76 BOARD

CN301	D-3	D330	B-9
CN302	D-6	D331	B-9
		D332	B-8
D301	B-9	D333	C-8
D302	B-8	D334	B-7
D303	B-7	D335	B-7
D304	B-7	D336	C-8
D305	C-5		
D306	B-5	IC302	E-9
D307	B-4	IC303	D-4
D308	B-4	IC305	B-3
D309	C-8	IC306	B-2
D310	B-6	IC307	D-8
D311	B-9	IC308	C-3
D312	B-7	IC309	C-2
D313	B-6	IC310	C-7
D314	B-5		
D315	B-10	J305	A-3
D316	B-9	J306	A-8
D317	B-8		
D318	B-6	Q301	B-10
D319	B-9	Q302	C-10
D320	B-5	Q303	C-10
D321	B-8	Q304	D-10
D322	B-7	Q305	D-9
D323	B-6	Q306	D-10
D324	B-6	Q307	D-6
D325	C-5	Q308	C-9
D326	C-5	Q309	B-9
D327	B-4	Q310	B-9
D328	B-4	Q311	C-9
D329	B-10		

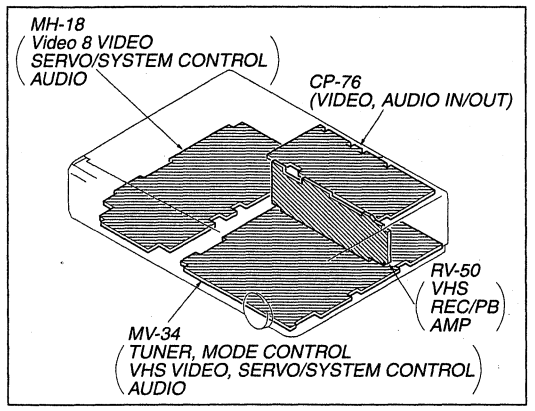

CP-76 BOARD (CONDUCTOR SIDE)

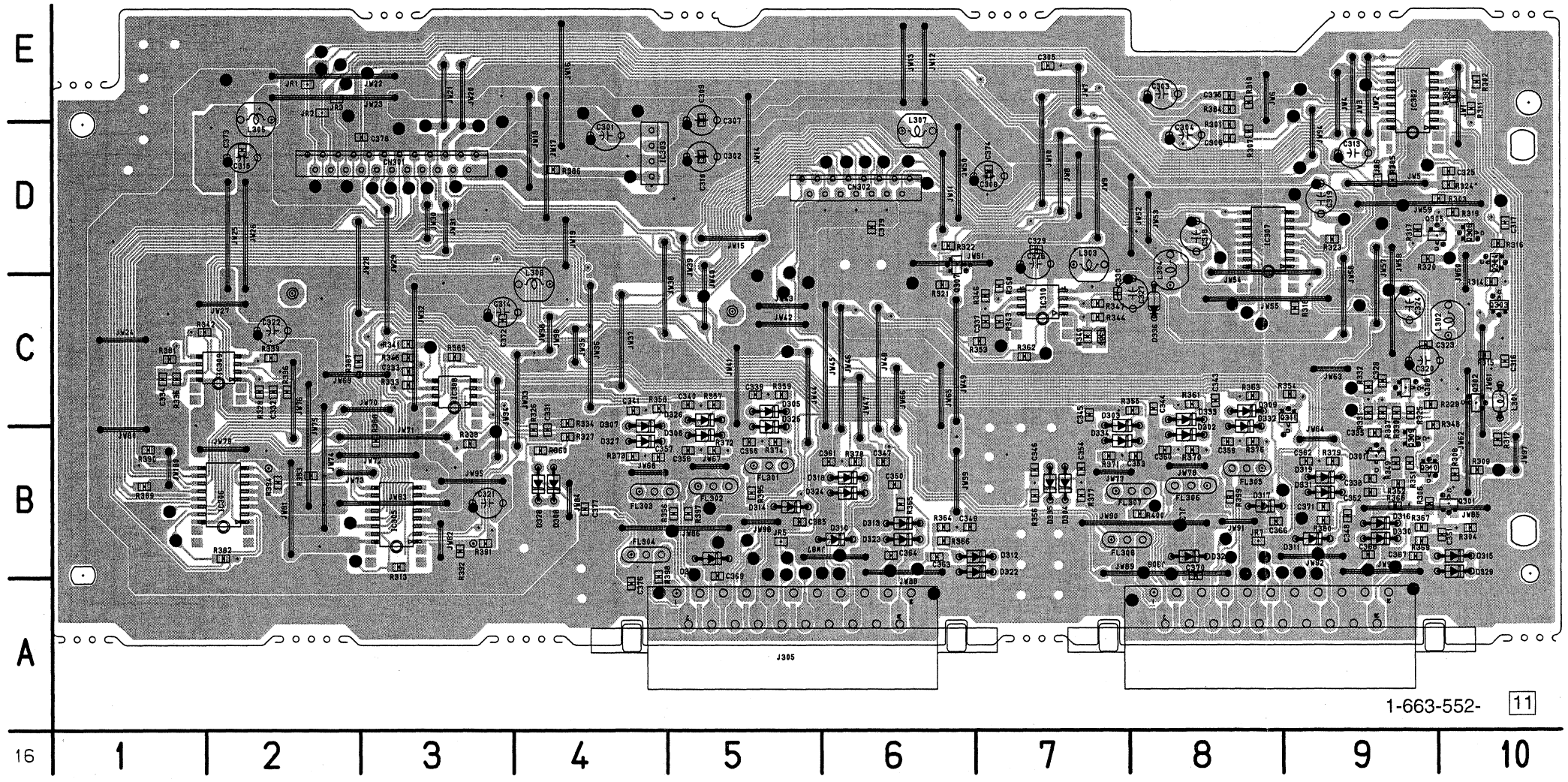

1-663-552- 11

SECTION 5
REPAIR PARTS LIST

5-1. EXPLODED VIEWS

NOTE:

- -XX, -X mean standardized parts, so they may have some differences from the original one.
- Items marked "*" are not stocked since they are seldom required for routine service. Some delay should be anticipated when ordering these items.
- The mechanical parts with no reference number in the exploded views are not supplied.

The components identified by mark ⚠ or dotted line with mark ⚠ are critical for safety. Replace only with part number specified.

5-1-1. FRONT PANEL ASSEMBLY AND CASE

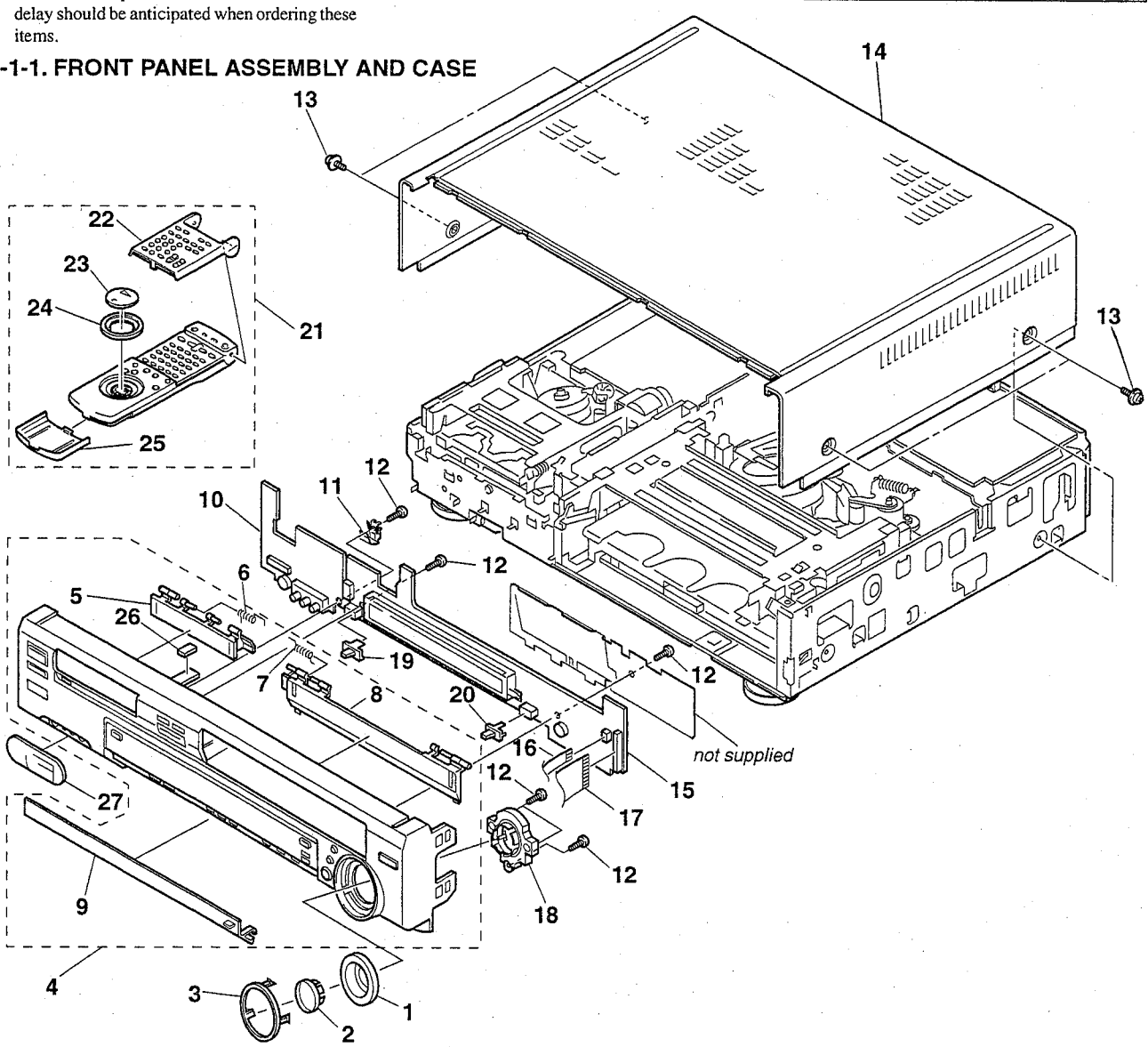

Ref. No.	Part No.	Description	Remarks
1	3-973-077-11	RING, CHANGE SPEED	
2	3-972-782-11	BUTTON, CENTER(AS,MN,NP,NR,UX,VC)	
2	3-972-782-41	BUTTON, CENTER(B)	
3	3-974-511-01	PLATE, RING ORNAMENTAL	
4	X-3946-729-1	PANEL ASSY, FRONT(UX)	
4	X-3946-730-1	PANEL ASSY, FRONT(VC)	
4	X-3946-731-2	PANEL ASSY, FRONT(B)	
4	X-3946-732-1	PANEL ASSY, FRONT(NP,NR)	
4	X-3947-537-1	PANEL ASSY, FRONT(MN)	
4	X-3947-539-1	PANEL ASSY, FRONT(AS)	
5	3-973-393-01	DOOR (-8), CASSETTE(EXCEPT AS,MN)	
5	3-973-393-21	DOOR (-8), CASSETTE(AS,MN)	
6	3-966-939-01	SPRING-8, FL	
7	3-953-432-01	SPRING (GE), FL	
8	3-973-394-01	DOOR (-V), CASSETTE(EXCEPT AS,MN)	
8	3-973-394-21	DOOR (-V), CASSETTE(AS,MN)	
9	3-973-402-21	DOOR, FRONT	
* 10	A-7073-109-A	FL-79 (UX) BOARD, COMPLETE	
11	3-973-405-03	SPRING, DOOR LOCK (B)	
11	3-975-709-01	SPRING (N), DOOR LOCK(AS,MN,NP,NR,UX,VC)	
12	4-921-277-41	SCREW (B2.6X8), TAPPING, BIND	
13	3-710-901-41	SCREW, TAPPING	
* 14	3-966-912-51	COVER, UPPER	

Ref. No.	Part No.	Description	Remarks
* 15	A-7066-980-A	FR-113 (UX) BOARD, COMPLETE	
16	1-777-675-11	CABLE, FLAT (FuF-19) 5P	
17	1-777-671-11	CABLE, FLAT (FuF-17)	
18	1-762-844-21	SWITCH, ROTARY	
19	3-966-943-01	KNOB (IR), SLIDE(B)	
19	3-966-943-11	KNOB (IR), SLIDE(AS,MN,NP,NR,UX,VC)	
20	3-966-944-01	KNOB (S), SLIDE (B)	
20	3-966-944-11	KNOB (S), SLIDE (AS,MN,NP,NR,UX,VC)	
21	1-473-930-11	REMOTE COMMANDER (RMT-V194)(UX)	
21	1-473-930-21	REMOTE COMMANDER (RMT-V194A) (NP,NR,VC)	
21	1-473-930-31	REMOTE COMMANDER (RMT-V194B)(B)	
21	1-473-930-41	REMOTE COMMANDER (RMT-V194C)(AS,MN)	
22	3-709-144-01	COVER (V194), REMOTE CONTROL(UX)	
22	3-709-144-11	COVER (V194A), REMOTE CONTROL (NP,NR,VC)	
22	3-709-144-21	COVER (V194B), REMOTE CONTROL(B)	
22	3-709-144-31	COVER (V194C), REMOTE CONTROL(AS,MN)	
23	3-972-850-01	BUTTON, FUNCTION	
24	3-973-077-31	RING, CHANGE SPEED	
25	3-709-044-01	COVER, BATTERY	
26	3-940-954-11	CUSHION, FLY WHEEL	
27	3-974-877-01	COVER, AV (NP,NR,UX,VC)	

5-1-2. CHASSIS ASSEMBLY-1

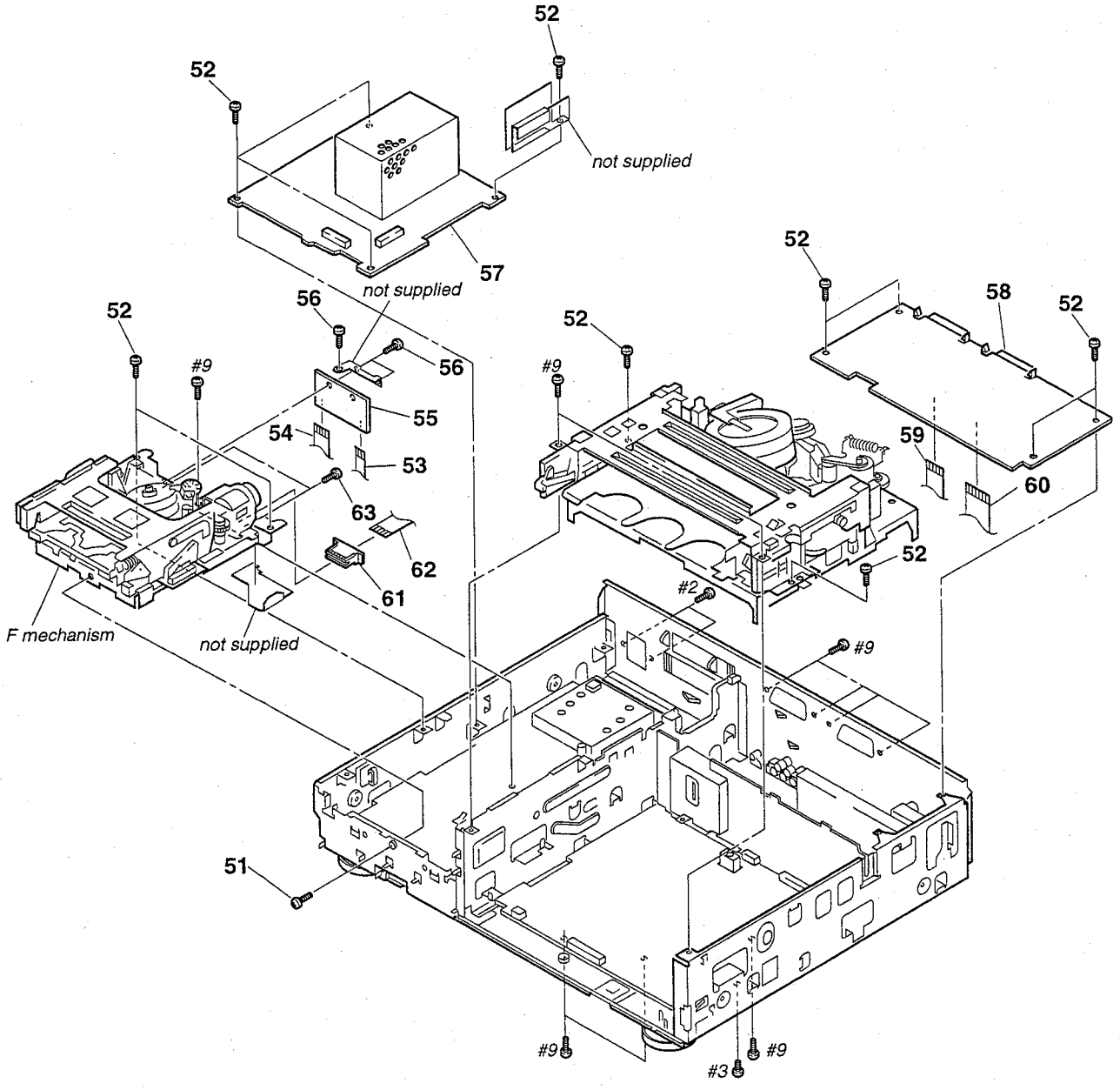

Ref. No.	Part No.	Description	Remarks
51	3-736-055-01	SCREW (3X8), TAPPING	
52	3-970-608-11	SUMITITE (B3), +BV	
53	1-777-669-11	CABLE, FLAT (FMR-5)	
54	1-777-668-11	CABLE, FLAT (FMR-4)	
* 55	A-7066-885-A	RP-211 (T) BOARD, COMPLETE	
56	3-732-817-01	SCREW (2X4.5), TAPPING	
* 57	A-7073-108-A	PS-380 (UX) BOARD, COMPLETE	
* 58	A-7066-975-A	CP-76 (VC) BOARD, COMPLETE	(AS,B,MN,NP,NR,VC)

Ref. No.	Part No.	Description	Remarks
* 58	A-7066-979-A	CP-76 (UX) BOARD, COMPLETE(UX)	
59	1-777-674-11	CABLE, FLAT (FMC-9) 15P	
60	1-777-673-11	CABLE, FLAT (FMC-8) 23P	
61	1-764-137-11	CONNECTOR, TRANSLATION 15P	
62	1-777-667-11	CABLE, FLAT (FMD-10)	
63	3-968-341-01	SCREW 2X4.5, STEP	

5-1-3. CHASSIS ASSEMBLY-2

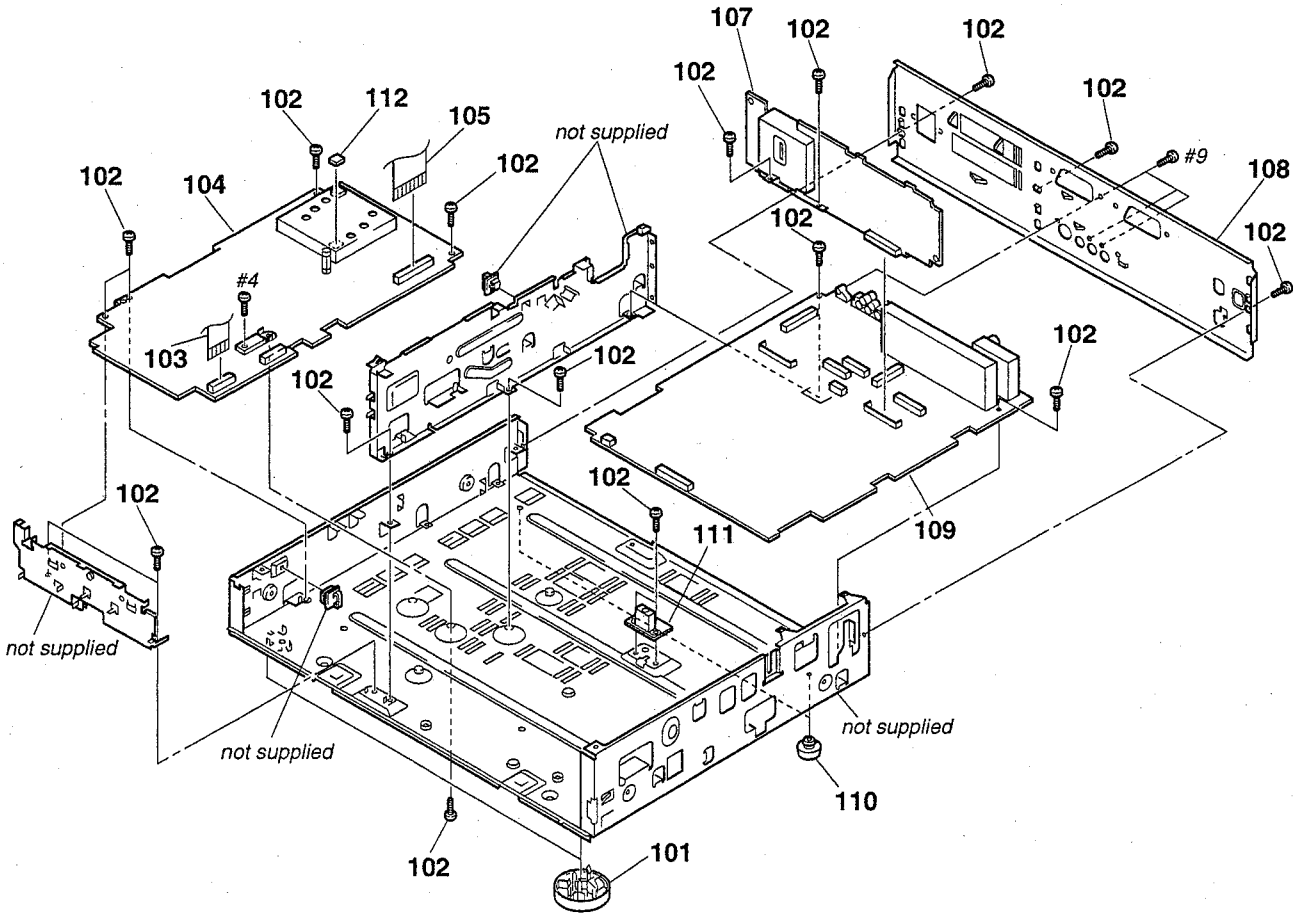

Ref. No.	Part No.	Description	Remarks
101	X-3946-574-1	INSULATOR ASSY	
102	3-970-608-11	SUMITITE (B3), +BV	
103	1-777-340-11	CABLE, FLAT (FMD-11) 19P	
* 104	A-7066-976-A	MH-18 (UX) BOARD, COMPLETE	
105	1-777-848-11	CABLE, FLAT (FMM-20)	
* 107	A-7066-978-A	RV-50 (P) BOARD, COMPLETE (AS,MN,NP,NR,UX,VC)	
* 107	A-7066-999-A	RV-50 (B) BOARD, COMPLETE(B)	
* 108	3-972-871-11	PANEL, REAR (UX)	
* 108	3-972-871-21	PANEL, REAR (AS,VC)	

Ref. No.	Part No.	Description	Remarks
* 108	3-972-871-31	PANEL, REAR (B)	
* 108	3-972-871-41	PANEL, REAR (MN,NP,NR)	
* 109	A-7066-973-A	MV-34 (NP) BOARD, COMPLETE(MN,NP,NR)	
* 109	A-7066-974-A	MV-34 (VC) BOARD, COMPLETE(AS,VC)	
* 109	A-7066-977-A	MV-34 (UX) BOARD, COMPLETE(UX)	
* 109	A-7066-998-A	MV-34 (B) BOARD, COMPLETE(B)	
110	3-957-819-01	FOOT	
* 111	3-966-909-01	BASE (V), MD	
112	3-513-007-02	CUSHION, LOCK PLATE	

5-1-4. MECHANISM DECK ASSEMBLY-1

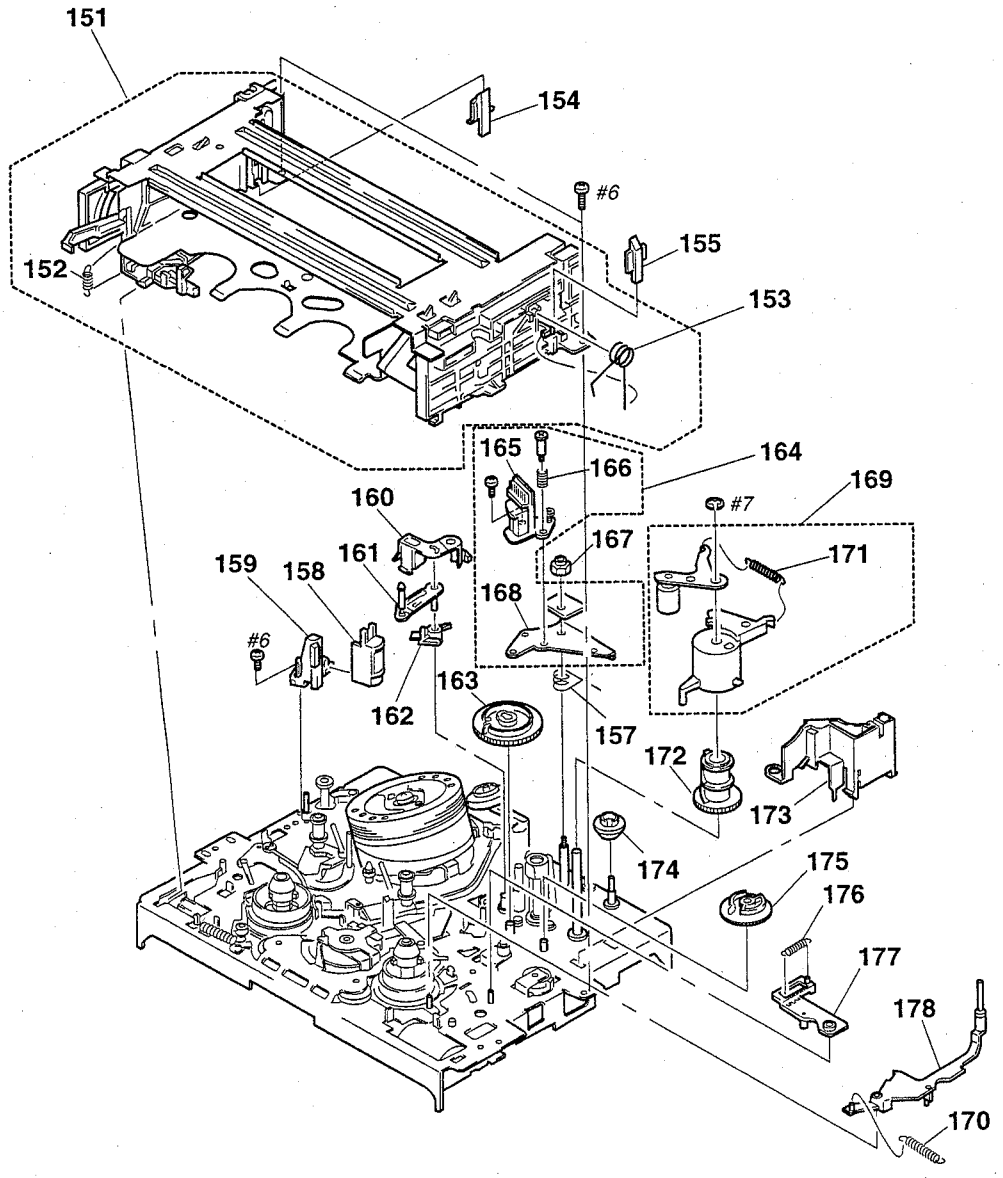

Ref. No.	Part No.	Description	Remarks
151	A-6759-603-A	FL BLOCK ASSY	
152	3-958-467-01	SPRING, TENSION COIL	
153	3-970-471-01	SPRING, TORSION	
154	3-958-488-03	PLATE, LIGHT GUIDE, END SENSOR	
155	3-970-473-01	PLATE, LIGHT GUIDE, TOP SENSOR	
157	3-958-487-01	SPRING, (ACE) TORSION COIL	
158	1-500-144-11	HEAD, FE	
159	X-3945-348-2	FEH ASSY	
160	3-962-298-01	BRACKET, TG7 TAPE	
161	X-3944-797-1	TG8 ASSY	
162	3-958-421-01	HOLDER, TG8	
163	3-958-152-01	GEAR, TG8	
164	A-6736-103-A	ACE BLOCK ASSY	

Ref. No.	Part No.	Description	Remarks
165	1-506-485-11	PIN, CONNECTOR 6P	
166	3-960-439-02	SPRING (ACE), COMPRESSION	
167	3-942-867-01	NUT, AC HEIGHT ADJUSTMENT	
168	3-958-491-01	BASE, ACE	
169	A-6746-072-A	PRESS BLOCK ASSY, PINCH	
170	3-958-505-01	SPRING (SOFT BRAKE T), TENSION	
171	3-958-455-01	SPRING (PINCH), TENSION	
172	3-958-151-01	GEAR, ELEVATOR	
173	3-958-454-01	OPNER, LID	
174	3-958-501-01	SCREW, ACE ADJUSTMENT	
175	3-958-153-01	GEAR, PRESS	
176	3-958-462-01	SPRING (RVS BRAKE), TENSION	
177	X-3943-885-1	ARM ASSY, RVS BRAKE	
178	X-3943-882-1	BRAKE (T) ASSY, SOFT	

5-1-5. MECHANISM DECK ASSEMBLY-2

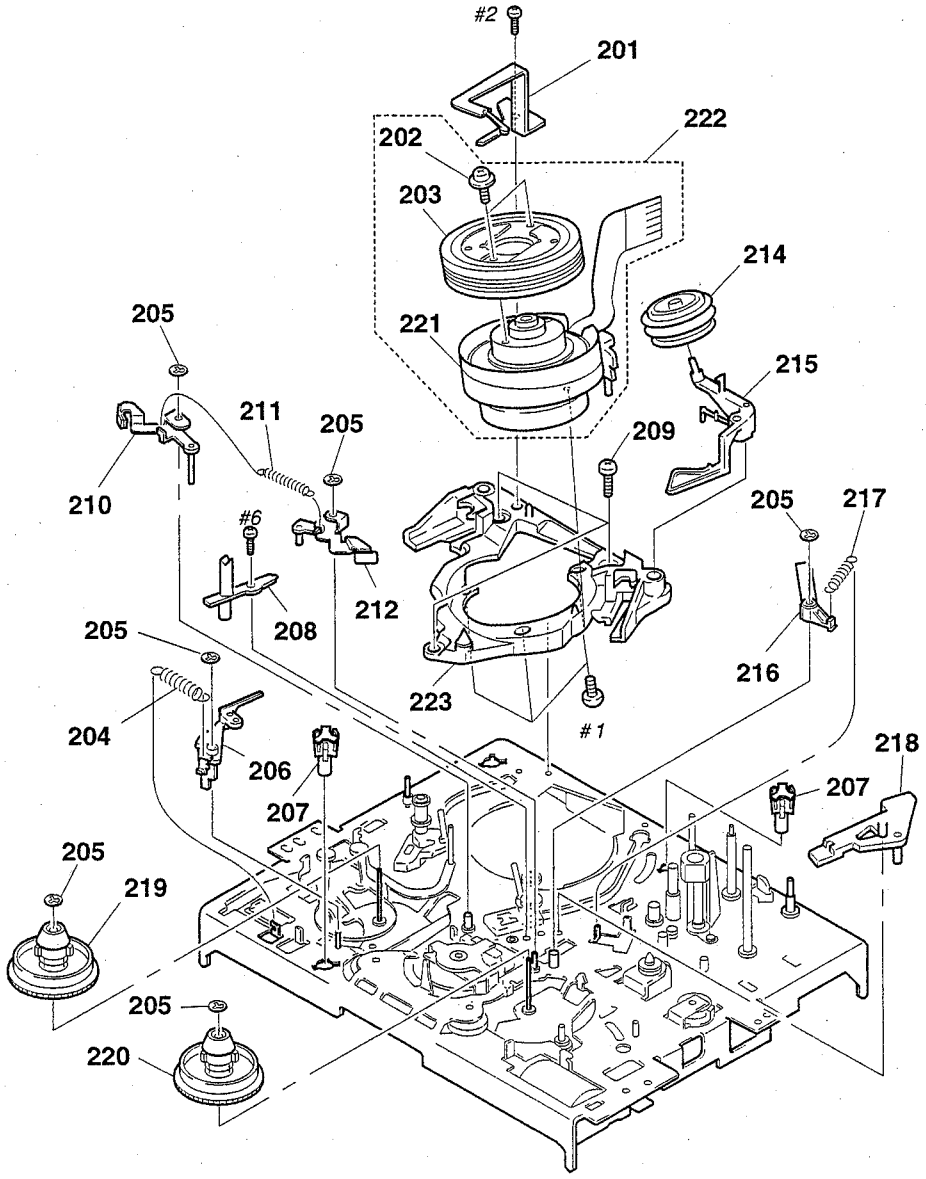

Ref. No.	Part No.	Description	Remarks
201	X-3943-899-8	GROUND ASSY, SHAFT(EXCEPT L2)	
202	2-643-205-01	SCREW	
203	8-848-622-02	UPPER DRUM ASSY DZR-66-R (M901)	
204	3-958-443-01	SPRING, STRETCH COIL SPRING	
205	3-669-595-00	WASHER (2), STOPPER	
206	3-958-450-01	BRAKE (S), SOFT	
207	3-958-390-01	SHAFT, PC BOARD	
208	3-958-391-01	PLATE, LIGHT GUIDE, LED	
209	3-961-441-01	SCREW (3x8)	
210	X-3945-443-1	BRAKE (S) ASSY, MAIN	
211	3-958-517-01	SPRING, TENSIONCOIL	

Ref. No.	Part No.	Description	Remarks
212	X-3945-444-1	ARM (T) ASSY, MAIN BRAKE	
214	X-3947-255-1	ROLLER ASSY, HC	
215	3-975-724-01	ARM, HC	
216	3-960-139-01	ARM, NEUTRALITY	
217	3-958-535-01	SPRING, TENSION	
218	3-960-138-01	ARM, PENDULUM COMPULSION	
219	X-3943-902-1	TABLE, REEL (S) ASSY	
220	X-3943-903-1	TABLE, REEL (T) ASSY	
221	8-848-666-11	LOWER DRUM ASSY DZL-51B/J-RP (M901)	
223	3-969-629-01	DRUM BASE	

5-1-6. MECHANISM DECK ASSEMBLY-3

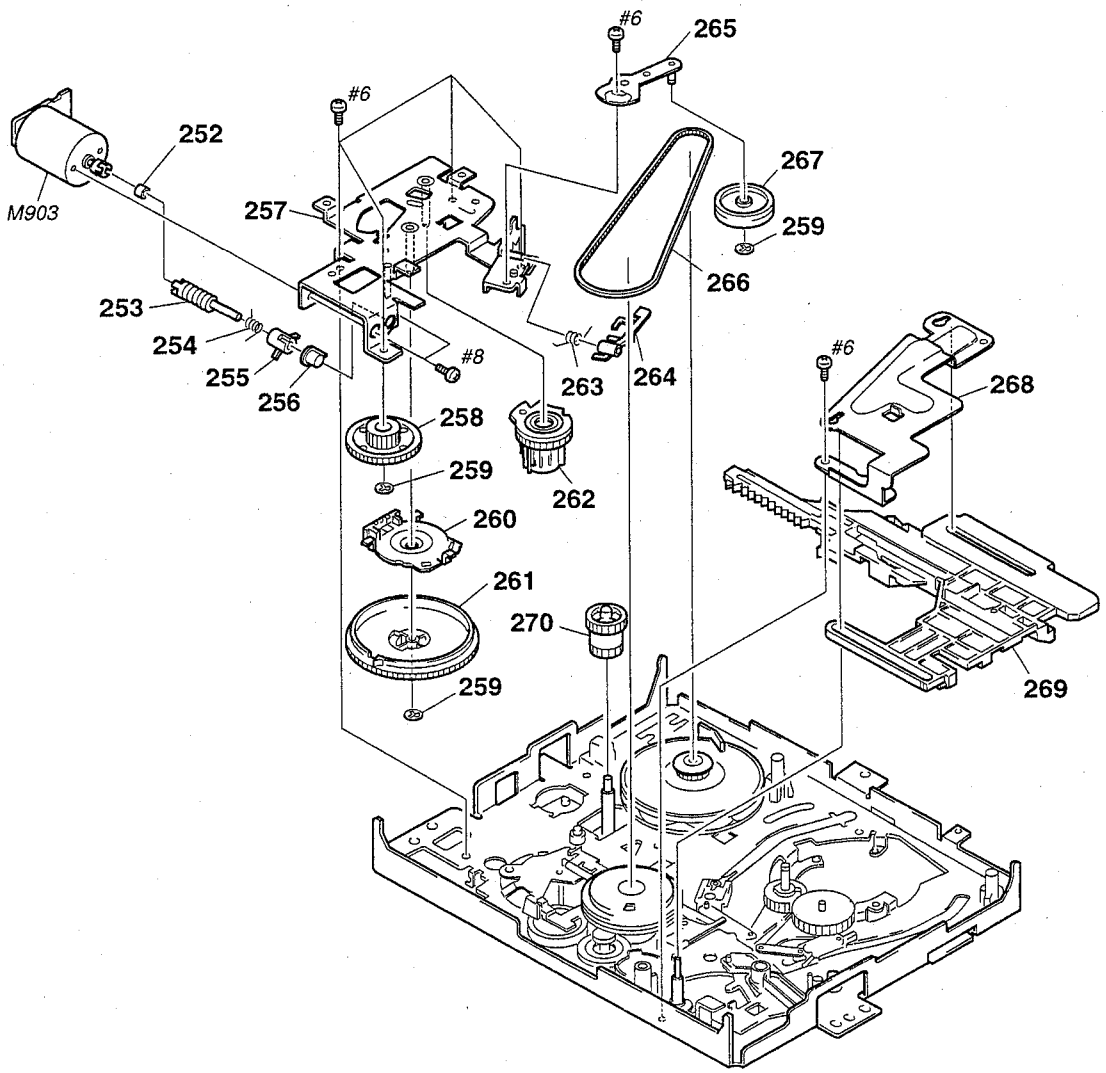

Ref. No.	Part No.	Description	Remarks
252	3-959-840-11	RUBBER, JOINT	
253	3-958-159-01	WORM	
254	3-958-460-01	SPRING, ONE-WAY	
255	3-958-160-01	PROPELLOR	
256	3-958-155-01	BEARING, CAM MOTOR	
* 257	X-3943-884-1	CHASSIS ASSY, CAM MOTOR	
258	3-958-157-02	WHEEL, WORM	
259	3-669-595-00	WASHER (2), STOPPER	
260	1-762-076-11	SWITCH, ROTARY	
261	3-958-161-07	GEAR, CAM	

Ref. No.	Part No.	Description	Remarks
262	3-958-156-03	GEAR, FL DRIVING	
263	3-958-445-01	SPRING,TORSIONCOIL(CAP BRAKE)	
264	X-3943-888-1	BRAKE ASSY, CAP	
265	X-3943-889-1	ARM ASSY, TENSION VEHICLE	
266	3-958-361-01	BELT, TIMING	
267	3-958-448-01	WHEEL, TENSION	
* 268	3-959-763-01	RETAINER	
269	3-958-163-04	SLIDER, MAIN	
270	3-958-162-02	GEAR,UPPER/LOWER COMMUNICATION	
M903	X-3943-883-1	MOTOR ASSY, CAM	

5-1-7. MECHANISM DECK ASSEMBLY-4

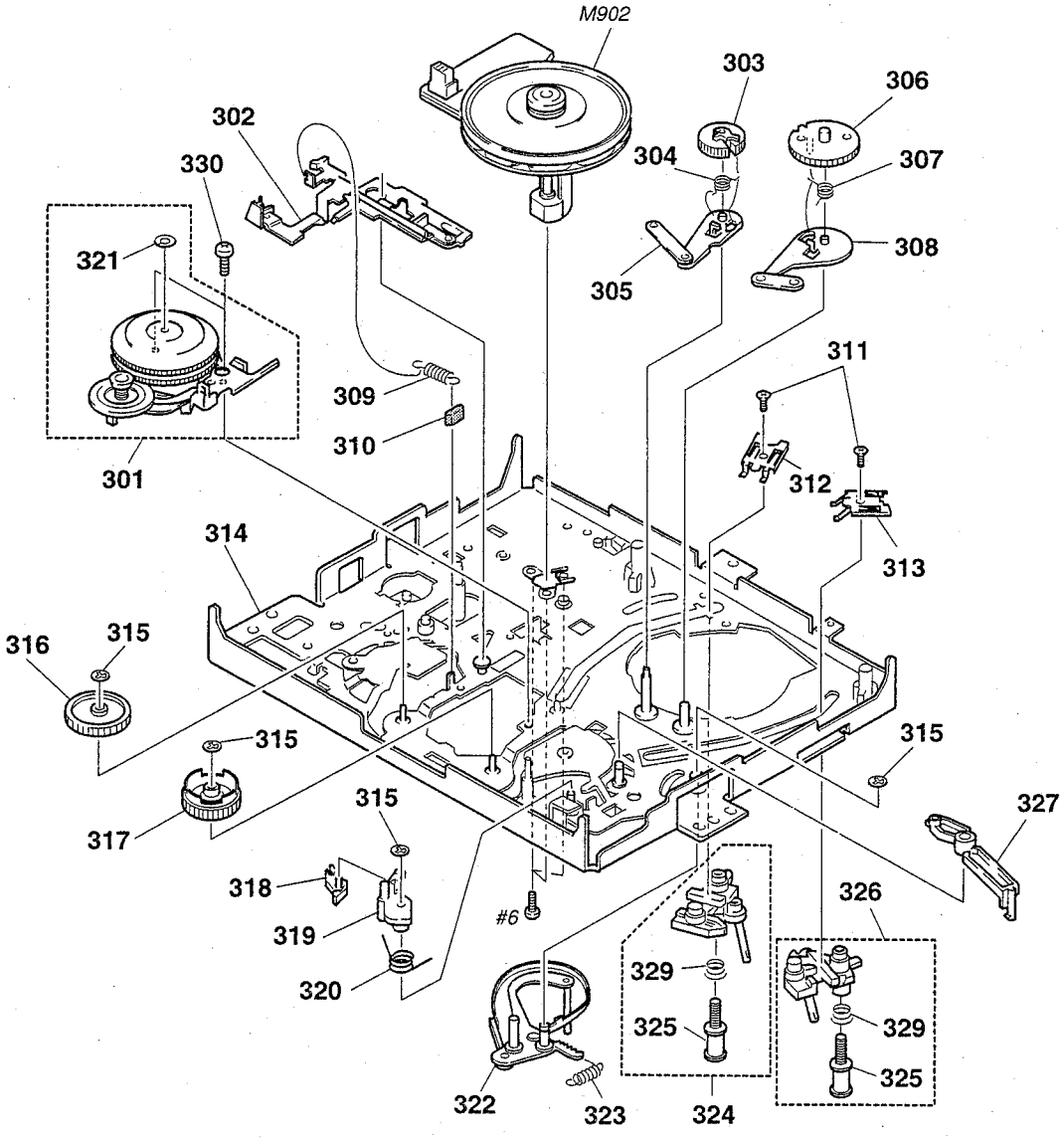

Ref. No.	Part No.	Description	Remarks
301	A-6739-102-A	RKB BLOCK ASSY	
302	X-3943-897-1	LEVER ASSY, TRIGGER	
303	3-958-485-02	GEAR (T), LOADING	
304	3-960-449-01	SPRING (T), TORSION COIL	
305	X-3943-891-3	LEVER (T) ASSY, LOADING	
306	3-958-476-01	GEAR (S), LOADING	
307	3-960-448-01	SPRING (S), TORSION COIL	
308	X-3943-890-2	LEVER (S) ASSY, LOADING	
309	3-958-529-01	SPRING (MOMENT), TENSION	
310	3-959-840-11	RUBBER, JOINT	
311	3-960-720-01	SCREW	
312	3-960-688-01	SPRING, LEAF (T), LOADING	
313	3-960-687-01	SPRING, LEAF (S), LOADING	
314	X-3945-485-4	CHASSIS ASSY, MECHANICAL	
315	3-669-595-00	WASHER (2), STOPPER	

Ref. No.	Part No.	Description	Remarks
316	3-962-960-01	GEAR (T-K), IDLER	
317	3-962-959-01	GEAR (S-K), IDLER	
318	3-958-533-01	CLAW, S WINDING	
319	3-958-532-01	ARM, S WINDING	
320	3-958-534-01	SPRING, TORSION	
321	3-966-092-01	RING, RETAINING, SLIT WASHER	
322	X-3943-886-1	TG1 ASSY	
323	3-958-492-01	SPRING (TG1), TENSION COIL	
324	A-6750-325-A	T BLOCK ASSY, SHUTTLE	
325	X-3944-378-1	ROLLER ASSY, GUIDE	
326	A-6750-316-A	SHUTTLE (S) BLOCK ASSY	
327	3-958-504-01	ARM, FIXED RELEASE	
329	3-965-178-01	SPRING	
M902	1-698-409-14	MOTOR, DC (CAPSTAN)	

5-1-8. Video 8 CASSETTE COMPARTMENT ASSEMBLY

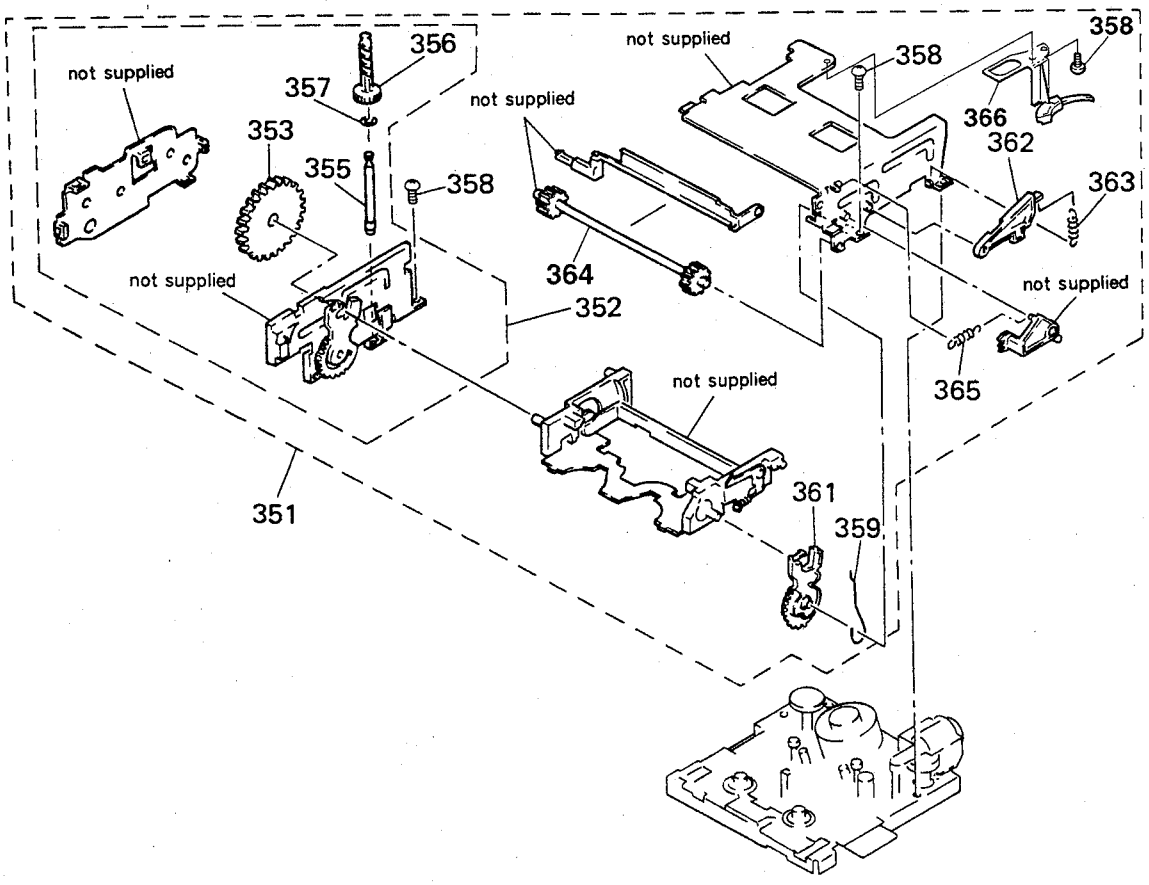

Ref. No.	Part No.	Description	Remarks
351	A-7092-566-H	FL BLOCK ASSY (FLAT)	
352	A-7093-114-A	PLATE (S) BLOCK ASSY, SIDE (FLAT)	
353	3-954-019-01	WHEEL, FL WORM	
* 355	3-954-029-01	SHAFT, FL WORM GEAR	
356	3-954-028-01	GEAR, FL WORM	
357	3-738-212-11	RETAINER, THRUST, REEL TABLE	
358	3-732-817-01	SCREW (2X4.5), TAPPING	

Ref. No.	Part No.	Description	Remarks
359	3-954-042-01	SPRING, PRESS	
361	3-954-033-01	ARM (T), DRIVING	
* 362	3-954-040-01	ARM, CASSETTE IN SWICH	
363	3-954-043-01	SPRING, TENSION	
364	X-3942-942-2	GEAR ASSY, JOINT	
365	3-954-044-01	SPRING, TENSION	
366	3-967-578-01	GUARD, TAPE	

5-1-9. Video 8 MECHANISM DECK ASSEMBLY-1

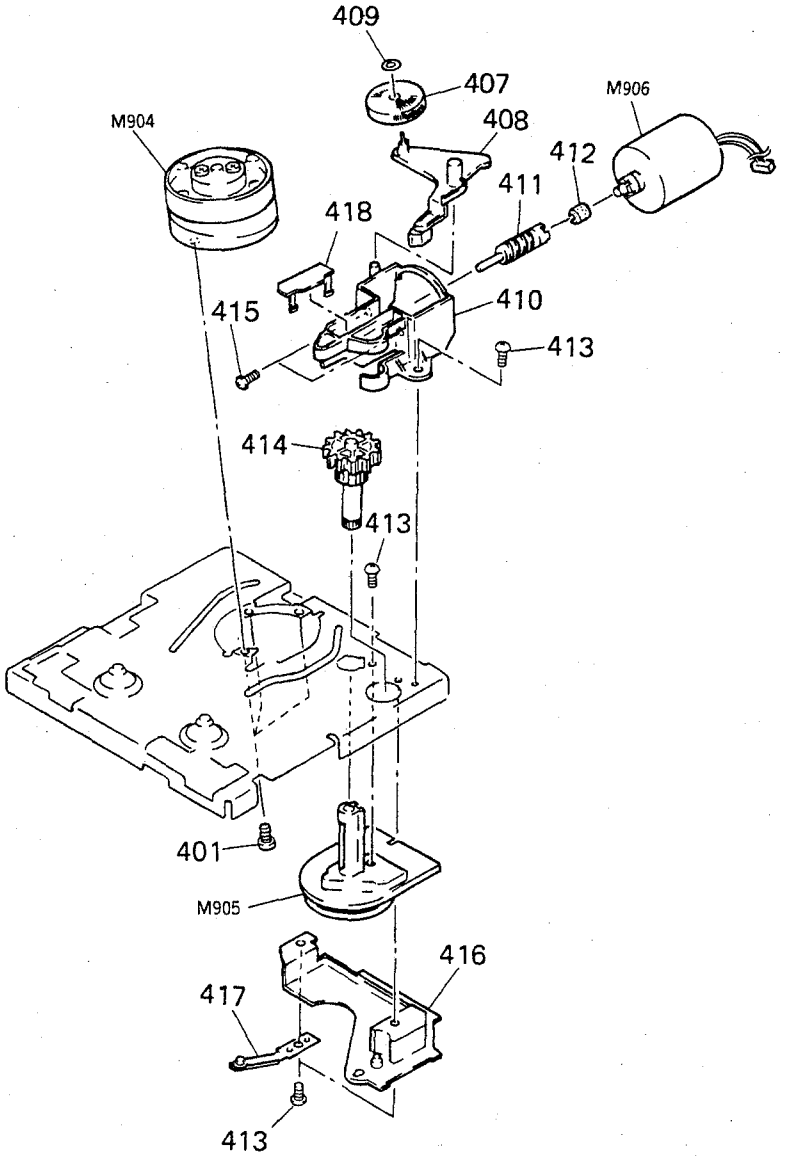

Ref. No.	Part No.	Description	Remarks
407	X-3945-909-1	ROLLER ASSY, HC	
408	X-3942-947-1	ARM ASSY, HC	
409	3-321-393-01	WASHER, STOPPER	
410	3-954-024-03	HOLDER, MOTOR	
411	3-733-395-01	GEAR (CAM), WORM	
412	3-962-295-01	RUBBER, JOINT	
413	3-732-817-01	SCREW (2X4.5), TAPPING	
414	3-954-023-01	WHEEL, CAM WORM	

Ref. No.	Part No.	Description	Remarks
415	4-623-699-01	SCREW (3X5)	
*416	3-954-049-01	RETAINER, WORM WHEET	
417	X-3945-777-1	GROUND(F') ASSY, SHAFT	
* 418	3-958-047-01	COVER, MOTOR HOLDER	
M904	A-7048-853-A	DRUM ASSY DGH-0D8A-R	
M905	8-835-499-01	MOTOR, DC SCE-0501A	
M906	X-3942-946-1	MOTOR ASSY, CAM	

5-1-10. Video 8 MECHANISM DECK ASSEMBLY-2

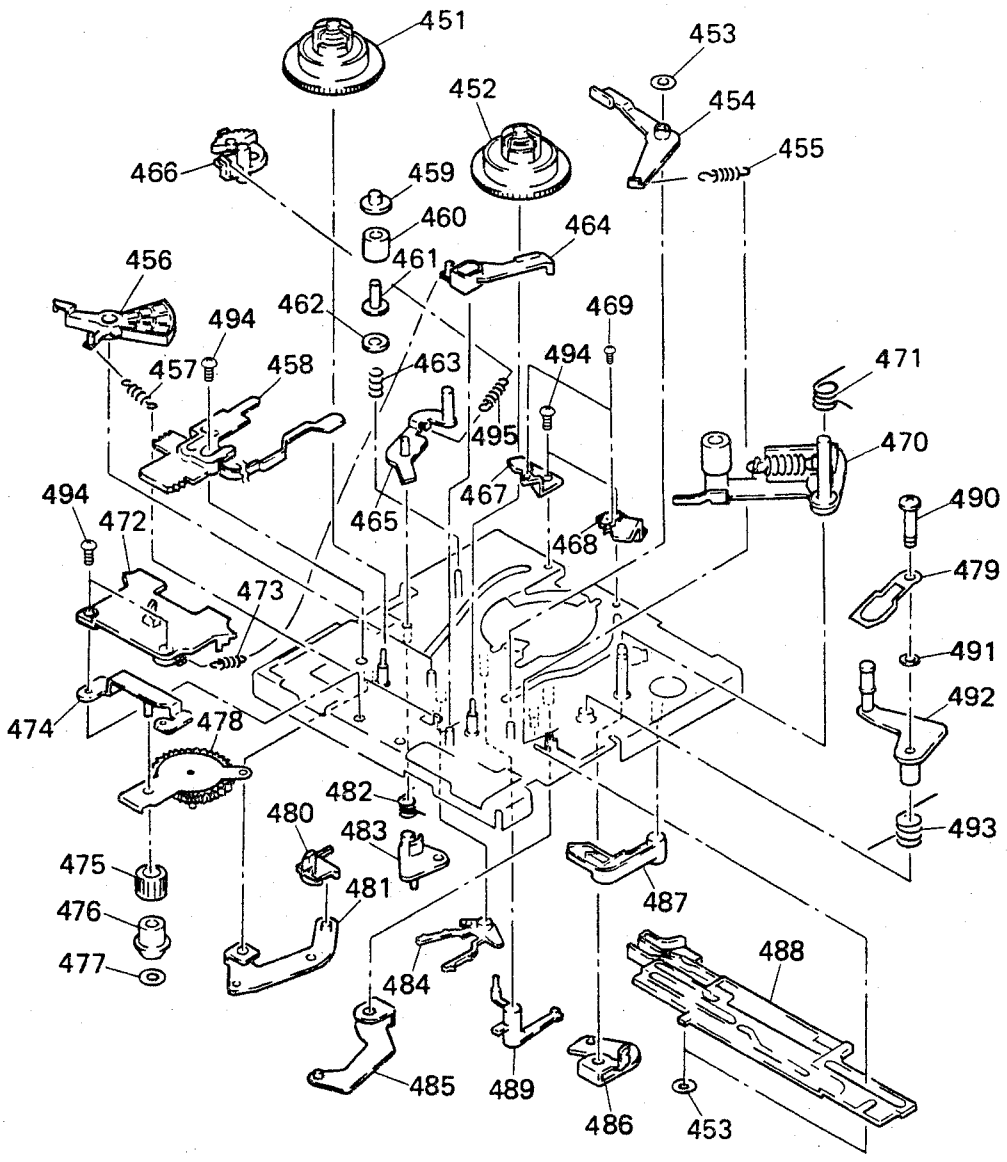

Ref. No.	Part No.	Description	Remarks
451	X-3942-954-1	TABLE (S) ASSY, REEL	
452	X-3942-953-2	TABLE (T) ASSY, REEL	
453	3-669-465-01	WASHER (1.5), STOPPER	
454	X-3943-161-3	BRAKE (T) ASSY	
455	3-953-978-01	SPRING, TENSION	
456	3-954-071-01	ARM, BRAKE (S)	
457	3-954-085-01	SPRING, TENSION	
458	X-3942-956-1	BAND ASSY, TENSION REGULATOR	
459	3-726-884-01	FLANGE, UPPER, TG2	
460	3-943-670-02	ROLLER, TG2	
461	3-726-885-01	SLEEVE, TG2	
462	3-726-882-02	FLANGE, LOWER, TG2	
463	3-954-001-01	SPRING, COMPRESSION	
464	X-3943-111-1	BRAKE (T) ASSY, SOFT	
465	X-3942-955-1	TENSION REGULATOR ASSY	
466	3-954-103-01	ARM, TENSION ADJUSTMENT	
467	3-954-090-01	CATCHER (S)	
468	3-954-091-01	CATCHER (T)	
469	3-954-285-01	SCREW (M1.4X0.2)	
470	X-3942-945-1	ARM ASSY, PINCH	
471	3-954-105-01	SPRING (PINCH DRIVING)	
* 472	3-954-063-01	PLATE, RELEASE, REEL LOCK	
473	3-955-142-01	SPRING, TENSION	

Ref. No.	Part No.	Description	Remarks
474	X-3943-162-1	BASE ASSY, PENDULUM	
475	3-954-059-01	GEAR, PENDULUM DRIVING	
476	3-954-321-01	BEARING, PENDULUM DRIVING	
477	3-726-829-01	WASHER, STOPPER	
478	X-3942-951-1	GEAR ASSY, PENDULUM	
479	3-954-093-01	SPACER, TG7	
480	3-953-975-01	CLAW, S TAKE-UP	
* 481	3-953-974-01	ARM, S TAKE-UP	
482	3-956-366-01	SPRING, TORSION	
483	3-954-100-01	ARM, TENSION REGULATOR SUB	
484	3-953-973-01	ARM, PENDULUM COMPULSION	
* 485	3-954-007-01	LEVER, SLIDE PLATE DRIVING	
* 486	3-954-009-01	LEVER, PINCH DRIVING	
487	3-954-016-01	LEVER, TG7 DRIVING	
488	3-953-972-01	PLATE, SLIDE	
489	3-954-072-01	LEVER, BRAKE (S) DRIVING	
490	3-954-096-01	SCREW, TG7 HEIGHT ADJUSTMENT	
491	3-738-212-11	RETAINER, THRUST, REEL TABLE	
492	X-3945-776-1	ARM(F') ASSY, TG7	
493	3-954-003-01	SPRING (TG7), TORSION	
494	3-732-817-01	SCREW (2X4.5), TAPPING	
495	3-954-074-01	SPRING, TENSION	

5-1-11. Video 8 MECHANISM DECK ASSEMBLY-3

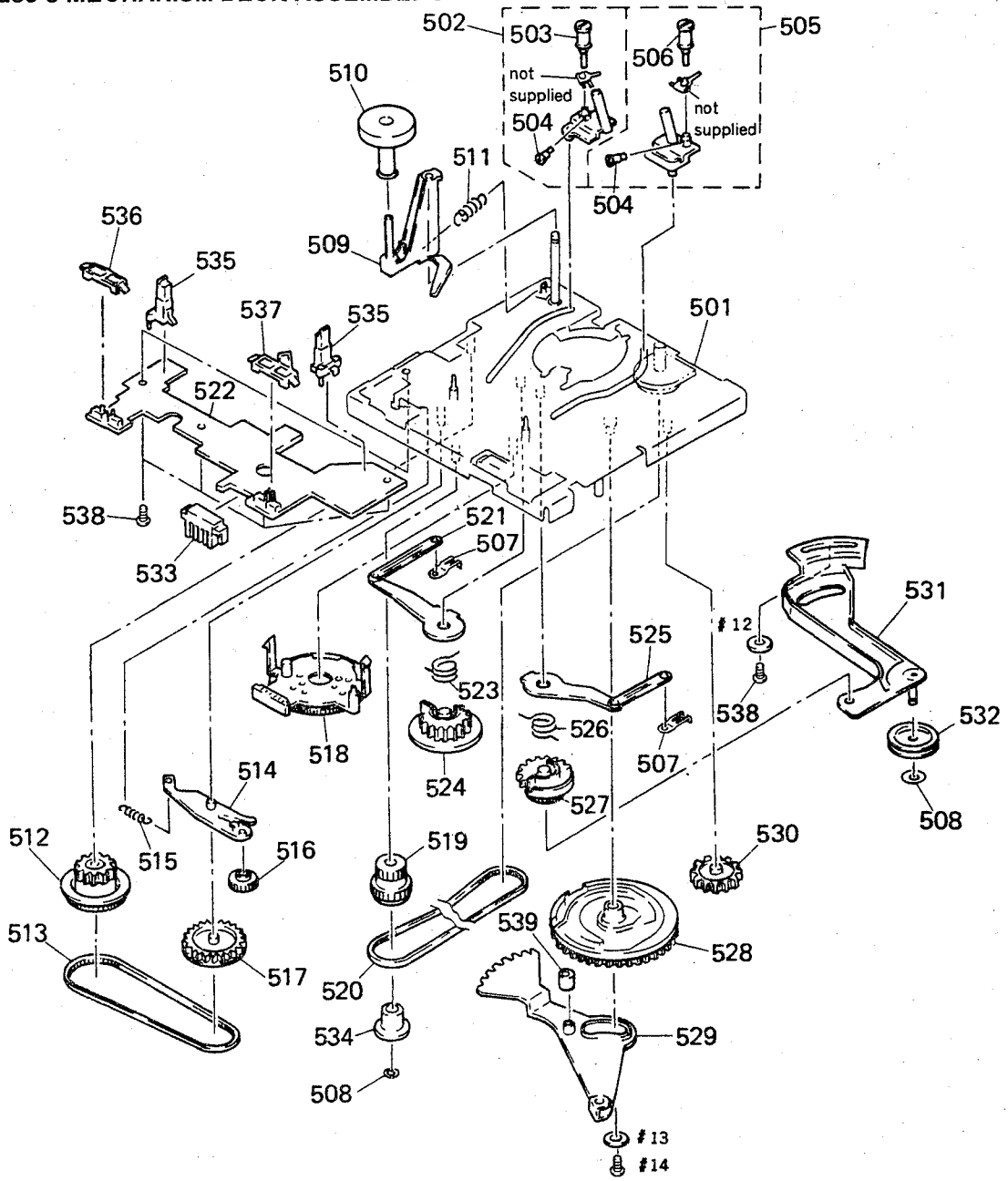

Ref. No.	Part No.	Description	Remarks
* 501	X-3946-740-1	CHASSIS(F'2) ASSY, MECHANICAL	
502	A-7040-338-A	COASTER (S) BLOCK ASSY	
503	X-3944-648-1	ROLLER ASSY (3), TG3	
504	3-947-504-01	SCREW (M1.2X2)	
505	A-7040-470-A	COASTER (T) BLOCK ASSY (2)	
506	X-3941-756-1	ROLLER ASSY (2), TG6	
507	3-956-649-01	SPRING, LEAF, COASTER	
508	3-726-829-01	WASHER, STOPPER	
509	X-3943-015-1	BASE ASSY, ROLLER	
510	X-3944-994-1	ROLLER ASSY, IMPEDANCE	
511	3-954-284-01	SPRING, TENSION	
512	3-953-983-01	GEAR, FL PULLEY	
513	3-954-079-01	BELT (FL), TIMING	
514	3-953-979-01	ARM, FL SELECTION	
515	3-953-982-01	SPRING, TENSION	
516	3-953-980-01	GEAR, FL SELECTION	
517	3-953-981-01	GEAR (DRIVING), FL PULLEY	
518	1-692-498-11	SWITCH, ROTARY	
519	3-954-061-01	GEAR, REEL RELAY	
520	3-953-986-01	BELT, TIMING	

Ref. No.	Part No.	Description	Remarks
521	X-3942-949-1	ARM (S) ASSY, LOADING	
* 522	A-7072-921-A	MD-59D BOARD, COMPLETE	
523	3-953-998-01	SPRING (S), TORSION	
524	3-953-991-01	GEAR (S), LOADING	
525	X-3942-948-1	ARM (T) ASSY, LOADING	
526	3-954-000-01	SPRING (T), TORSION	
527	3-953-992-01	GEAR (T), LOADING	
528	3-954-050-01	CAM, MAIN	
* 529	3-954-014-01	LEVER, LOADING DRIVING	
530	3-954-015-01	GEAR, CAM RELAY	
531	X-3942-962-1	BASE ASSY, PULLEY	
532	X-3943-016-1	PULLEY ASSY, BELT	
533	1-750-620-11	CONNECTOR (MM8 MD)	
534	3-954-102-02	FLANGE, REEL RELAY	
535	3-953-985-01	HOLDER, ST SENSOR	
536	3-954-638-01	HOLDER (S), PUSH SWITCH	
537	3-954-639-01	HOLDER (T), PUSH SWITCH	
538	3-732-817-01	SCREW (2X4.5), TAPPING	
539	3-954-323-01	ROLLER, LOADING	

5-2. ELECTRICAL PARTS LIST

Note:

When indicating parts by reference number, please include the board naame.

The components identified by mark ⚠ or dotted line with mark ⚠ are critical for safety. Replace only with part number specified.

- Due to standardization, replacements in the parts list may be different from the parts specified in the diagrams or the components used on the set.
- -XX, -X mean standardized parts, so they may have some difference from the original one.
- Items marked "*" are not stocked since they are seldom required for routine service. Some delay should be anticipated when ordering these items.
- CAPACITORS:
  uF: µF
- RESISTORS
  All resistors are in ohms.
  METAL: metal-film resistor
  METAL OXIDE: Metal Oxide-film resistor
  F: nonflammable
- COILS
  uH: µH
- SEMICONDUCTORS
  In each case, u: µ, for example:
  uA...: µA... , uPA... , µPA... ,
  uPB... , µPB... , uPC... , µPC... ,
  uPD..., µPD...

Ref. No.	Part No.	Description			Remarks
*	A-7066-975-A	CP-76 (VC) BOARD, COMPLETE			
		**********			
					(AS,B,MN,NP,NR,VC)
*	A-7066-979-A	CP-76 (UX) BOARD, COMPLETE (UX)			
		**********			
					(Ref.No.: 5,000 Series)
		< CAPACITOR >			
C301	1-126-967-11	ELECT	47uF	20%	10V
C302	1-126-967-11	ELECT	47uF	20%	10V
C303	1-126-967-11	ELECT	47uF	20%	10V
C304	1-126-967-11	ELECT	47uF	20%	10V
C305	1-164-232-11	CERAMIC CHIP	0.01uF		50V
C306	1-163-245-11	CERAMIC CHIP	56PF	5%	50V
C307	1-126-967-11	ELECT	47uF	20%	10V
C308	1-126-967-11	ELECT	47uF	20%	10V
C309	1-164-232-11	CERAMIC CHIP	0.01uF		50V
C310	1-164-232-11	CERAMIC CHIP	0.01uF		50V
C313	1-126-967-11	ELECT	47uF	20%	10V
C314	1-126-967-11	ELECT	47uF	20%	10V
					(AS,B,MN,NP,NR,VC)
C315	1-126-967-11	ELECT	47uF	20%	10V
					(AS,B,MN,NP,NR,VC)
C316	1-163-104-00	CERAMIC CHIP	30PF	5%	50V
C317	1-164-232-11	CERAMIC CHIP	0.01uF		50V
C318	1-126-967-11	ELECT	47uF	20%	10V
					(AS,B,MN,NP,NR,VC)
C319	1-126-967-11	ELECT	47uF	20%	10V
C320	1-126-967-11	ELECT	47uF	20%	10V
					(AS,B,MN,NP,NR,VC)
C321	1-126-967-11	ELECT	47uF	20%	10V
C322	1-126-967-11	ELECT	47uF	20%	10V
C323	1-164-232-11	CERAMIC CHIP	0.01uF		50V
C324	1-126-965-11	ELECT	22uF	20%	50V
					(AS,B,MN,NP,NR,VC)
C325	1-164-232-11	CERAMIC CHIP	0.01uF		50V
C326	1-126-967-11	ELECT	47uF	20%	10V
C327	1-126-967-11	ELECT	47uF	20%	10V
C328	1-163-005-11	CERAMIC CHIP	470PF	10%	50V
					(AS,B,MN,NP,NR,VC)
C329	1-164-232-11	CERAMIC CHIP	0.01uF		50V
C330	1-164-232-11	CERAMIC CHIP	0.01uF		50V
C331	1-163-251-11	CERAMIC CHIP	100PF	5%	50V
C332	1-163-251-11	CERAMIC CHIP	100PF	5%	50V
					(AS,B,MN,NP,NR,VC)
C333	1-163-251-11	CERAMIC CHIP	100PF	5%	50V
C334	1-163-251-11	CERAMIC CHIP	100PF	5%	50V
					(AS,B,MN,NP,NR,VC)
C335	1-164-161-11	CERAMIC CHIP	0.0022uF	10%	100V
					(AS,B,MN,NP,NR,VC)

Ref. No.	Part No.	Description			Remarks
C336	1-163-235-11	CERAMIC CHIP	22PF	5%	50V
C337	1-163-235-11	CERAMIC CHIP	22PF	5%	50V
C338	1-163-005-11	CERAMIC CHIP	470PF	10%	50V
					(AS,B,MN,NP,NR,VC)
C347	1-163-251-11	CERAMIC CHIP	100PF	5%	50V
					(AS,B,MN,NP,NR,VC)
C348	1-163-251-11	CERAMIC CHIP	100PF	5%	50V
					(AS,B,MN,NP,NR,VC)
C361	1-163-251-11	CERAMIC CHIP	100PF	5%	50V
C363	1-163-251-11	CERAMIC CHIP	100PF	5%	50V
C364	1-163-251-11	CERAMIC CHIP	100PF	5%	50V
C365	1-163-009-11	CERAMIC CHIP	0.001uF	10%	50V
C367	1-163-251-11	CERAMIC CHIP	100PF	5%	50V
C368	1-163-251-11	CERAMIC CHIP	100PF	5%	50V
					(AS,B,MN,NP,NR,VC)
C369	1-163-038-00	CERAMIC CHIP	0.1uF		25V
C370	1-163-038-00	CERAMIC CHIP	0.1uF		25V
C371	1-163-251-11	CERAMIC CHIP	100PF	5%	50V
					(AS,B,MN,NP,NR,VC)
C375	1-163-110-00	CERAMIC CHIP	51PF	5%	50V
C376	1-163-038-00	CERAMIC CHIP	0.1uF		25V
C377	1-163-038-00	CERAMIC CHIP	0.1uF		25V
C378	1-163-038-00	CERAMIC CHIP	0.1uF		25V
C379	1-163-038-00	CERAMIC CHIP	0.1uF		25V
		< CONNECTOR >			
CN301	1-774-489-41	CONNECTOR, FFC/FPC 23P			
CN302	1-695-338-11	CONNECTOR, FFC/FPC 15P			
		< DIODE >			
D301	8-719-801-78	DIODE 1SS184 (AS,B,MN,NP,NR,VC)			
D302	8-719-109-97	DIODE RD6.8ES-B2 (AS,B,MN,NP,NR,VC)			
D303	8-719-109-97	DIODE RD6.8ES-B2			
D304	8-719-109-97	DIODE RD6.8ES-B2 (AS,B,MN,NP,NR,VC)			
D305	8-719-109-97	DIODE RD6.8ES-B2			
D306	8-719-109-97	DIODE RD6.8ES-B2			
D307	8-719-109-97	DIODE RD6.8ES-B2			
D308	8-719-109-97	DIODE RD6.8ES-B2			
D309	8-719-109-97	DIODE RD6.8ES-B2			
D310	8-719-109-97	DIODE RD6.8ES-B2 (AS,B,MN,NP,NR,VC)			
D311	8-719-109-97	DIODE RD6.8ES-B2 (AS,B,MN,NP,NR,VC)			
D312	8-719-109-97	DIODE RD6.8ES-B2			
D313	8-719-109-97	DIODE RD6.8ES-B2			
D314	8-719-110-31	DIODE RD12ES-B2			
D315	8-719-109-97	DIODE RD6.8ES-B2			
D316	8-719-109-97	DIODE RD6.8ES-B2 (AS,B,MN,NP,NR,VC)			
D317	8-719-110-31	DIODE RD12ES-B2			
D318	8-719-109-97	DIODE RD6.8ES-B2			
D319	8-719-109-97	DIODE RD6.8ES-B2 (AS,B,MN,NP,NR,VC)			
D320	8-719-109-97	DIODE RD6.8ES-B2			

Ref. No.	Part No.	Description	Remarks
D321	8-719-109-97	DIODE RD6.8ES-B2	
D322	8-719-109-97	DIODE RD6.8ES-B2	
D323	8-719-109-97	DIODE RD6.8ES-B2	
D324	8-719-109-97	DIODE RD6.8ES-B2	
D325	8-719-109-97	DIODE RD6.8ES-B2	
D326	8-719-109-97	DIODE RD6.8ES-B2	
D327	8-719-109-97	DIODE RD6.8ES-B2	
D328	8-719-109-97	DIODE RD6.8ES-B2	
D329	8-719-109-97	DIODE RD6.8ES-B2	
D330	8-719-109-97	DIODE RD6.8ES-B2 (AS,B,MN,NP,NR,VC)	
D331	8-719-109-97	DIODE RD6.8ES-B2 (AS,B,MN,NP,NR,VC)	
D332	8-719-109-97	DIODE RD6.8ES-B2	
D333	8-719-109-97	DIODE RD6.8ES-B2 (AS,B,MN,NP,NR,VC)	
D334	8-719-109-97	DIODE RD6.8ES-B2	
D335	8-719-109-97	DIODE RD6.8ES-B2 (AS,B,MN,NP,NR,VC)	
D336	8-719-911-19	DIODE 1SS119	
D337	8-719-118-28	DIODE RD9.1EW-T2	
		< FILTER >	
FL301	1-236-163-11	ENCAPSULATED COMPONENT	
FL302	1-236-163-11	ENCAPSULATED COMPONENT	
FL303	1-236-163-11	ENCAPSULATED COMPONENT	
FL304	1-236-163-11	ENCAPSULATED COMPONENT	
FL305	1-236-163-11	ENCAPSULATED COMPONENT	
FL306	1-236-163-11	ENCAPSULATED COMPONENT (AS,B,MN,NP,NR,VC)	
FL307	1-236-163-11	ENCAPSULATED COMPONENT	
FL308	1-236-163-11	ENCAPSULATED COMPONENT (AS,B,MN,NP,NR,VC)	
		< IC >	
IC302	8-759-009-06	IC MC14052BF	
IC303	8-759-504-46	IC PQ05RF1	
IC305	8-759-009-07	IC MC14053BFEL (AS,B,MN,NP,NR,VC)	
IC306	8-759-009-07	IC MC14053BFEL (AS,B,MN,NP,NR,VC)	
IC307	8-759-009-07	IC MC14053BFEL (AS,B,MN,NP,NR,VC)	
IC308	8-759-100-96	IC uPC4558G2	
IC309	8-759-100-96	IC uPC4558G2 (AS,B,MN,NP,NR,VC)	
IC310	8-759-262-03	IC MC14577CFEL	
		< JACK >	
J305	1-561-534-00	SOCKET, PIN 21P(LINE-1/TV)	
J306	1-561-534-00	SOCKET, PIN 21P(DECODER/LINE-3)	
		< JUMPER RESISTOR >	
JR001	1-216-295-91	CONDUCTOR, CHIP(2012)	
JR002	1-216-295-91	CONDUCTOR, CHIP(2012)	
JR003	1-216-295-91	CONDUCTOR, CHIP(2012)	
JR005	1-216-295-91	CONDUCTOR, CHIP(2012)	
JR006	1-216-295-91	CONDUCTOR, CHIP(2012)	
JR007	1-216-295-91	CONDUCTOR, CHIP(2012)	
		< COIL >	
L301	1-410-516-11	INDUCTOR 39uH	
L302	1-410-470-11	INDUCTOR 10uH (AS,B,MN,NP,NR,VC)	
L303	1-410-470-11	INDUCTOR 10uH	
L304	1-410-470-11	INDUCTOR 10uH	
L305	1-410-482-31	INDUCTOR 100uH	
L306	1-410-482-31	INDUCTOR 100uH	
L307	1-410-470-11	INDUCTOR 10uH	

Ref. No.	Part No.	Description	Remarks
		< TRANSISTOR >	
Q301	8-729-010-05	TRANSISTOR MSB709-RT1	
Q302	8-729-010-25	TRANSISTOR MSD601-RT1	
Q303	8-729-010-25	TRANSISTOR MSD601-RT1	
Q304	8-729-010-25	TRANSISTOR MSD601-RT1	
Q305	8-729-010-25	TRANSISTOR MSD601-RT1	(AS,B,MN,NP,NR,VC)
Q306	8-729-010-05	TRANSISTOR MSB709-RT1	(AS,B,MN,NP,NR,VC)
Q307	8-729-010-25	TRANSISTOR MSD601-RT1	
Q308	8-729-010-25	TRANSISTOR MSD601-RT1	(AS,B,MN,NP,NR,VC)
Q309	8-729-010-25	TRANSISTOR MSD601-RT1	(AS,B,MN,NP,NR,VC)
Q310	8-729-010-05	TRANSISTOR MSB709-RT1	(AS,B,MN,NP,NR,VC)
Q311	8-729-010-05	TRANSISTOR MSB709-RT1	(AS,B,MN,NP,NR,VC)
		< RESISTOR >	
R301	1-216-049-91	METAL GLAZE 1K 5% 1/10W	
R302	1-216-043-91	METAL GLAZE 560 5% 1/10W	
R303	1-216-295-91	CONDUCTOR, CHIP(2012) (UX)	
R305	1-216-081-00	METAL CHIP 22K 5% 1/10W	
R306	1-216-065-00	METAL CHIP 4.7K 5% 1/10W	
R307	1-216-049-91	METAL GLAZE 1K 5% 1/10W	
R308	1-216-065-00	METAL CHIP 4.7K 5% 1/10W	
R309	1-216-047-91	METAL GLAZE 820 5% 1/10W	
R310	1-216-059-00	METAL CHIP 2.7K 5% 1/10W	
R311	1-216-049-91	METAL GLAZE 1K 5% 1/10W	
R313	1-216-295-91	CONDUCTOR, CHIP(2012) (UX)	
R314	1-216-049-91	METAL GLAZE 1K 5% 1/10W	
R315	1-216-055-00	METAL CHIP 1.8K 5% 1/10W	
R316	1-216-065-00	METAL CHIP 4.7K 5% 1/10W	
R318	1-216-081-00	METAL CHIP 22K 5% 1/10W	(AS,B,MN,NP,NR,VC)
R319	1-216-065-00	METAL CHIP 4.7K 5% 1/10W	(AS,B,MN,NP,NR,VC)
R320	1-216-065-00	METAL CHIP 4.7K 5% 1/10W	(AS,B,MN,NP,NR,VC)
R322	1-216-065-00	METAL CHIP 4.7K 5% 1/10W	
R323	1-216-081-00	METAL CHIP 22K 5% 1/10W	(AS,B,MN,NP,NR,VC)
R324	1-216-025-91	METAL GLAZE 100 5% 1/10W	
R325	1-216-065-00	METAL CHIP 4.7K 5% 1/10W	(AS,B,MN,NP,NR,VC)
R326	1-216-073-00	METAL CHIP 10K 5% 1/10W	
R327	1-216-041-00	METAL CHIP 470 5% 1/10W	
R328	1-216-073-00	METAL CHIP 10K 5% 1/10W	(AS,B,MN,NP,NR,VC)
R329	1-216-069-00	METAL CHIP 6.8K 5% 1/10W	(AS,B,MN,NP,NR,VC)
R330	1-216-105-91	METAL GLAZE 220K 5% 1/10W	(AS,B,MN,NP,NR,VC)
R331	1-216-101-00	METAL CHIP 150K 5% 1/10W	(AS,B,MN,NP,NR,VC)
R332	1-216-109-00	METAL CHIP 330K 5% 1/10W	(AS,B,MN,NP,NR,VC)
R333	1-216-073-00	METAL CHIP 10K 5% 1/10W	
R334	1-216-093-00	METAL CHIP 68K 5% 1/10W	
R335	1-216-073-00	METAL CHIP 10K 5% 1/10W	(AS,B,MN,NP,NR,VC)
R336	1-216-095-00	METAL CHIP 82K 5% 1/10W	(AS,B,MN,NP,NR,VC)
R337	1-216-121-91	METAL GLAZE 1M 5% 1/10W	(AS,B,MN,NP,NR,VC)
R338	1-216-073-00	METAL CHIP 10K 5% 1/10W	
R339	1-216-073-00	METAL CHIP 10K 5% 1/10W	(AS,B,MN,NP,NR,VC)

Ref. No.	Part No.	Description			Remarks
R340	1-216-043-91	METAL GLAZE	560	5%	1/10W
R341	1-216-073-00	METAL CHIP	10K	5%	1/10W
R342	1-216-073-00	METAL CHIP	10K	5%	1/10W (AS,B,MN,NP,NR,VC)
R343	1-216-043-91	METAL GLAZE	560	5%	1/10W
R344	1-216-043-91	METAL GLAZE	560	5%	1/10W
R345	1-216-093-00	METAL CHIP	68K	5%	1/10W
R346	1-216-042-00	METAL CHIP	510	5%	1/10W
R347	1-216-089-91	METAL GLAZE	47K	5%	1/10W
R348	1-216-053-00	METAL CHIP	1.5K	5%	1/10W (AS,B,MN,NP,NR,VC)
R349	1-216-025-91	METAL GLAZE	100	5%	1/10W (AS,B,MN,NP,NR,VC)
R350	1-216-089-91	METAL GLAZE	47K	5%	1/10W
R351	1-216-025-91	METAL GLAZE	100	5%	1/10W (AS,B,MN,NP,NR,VC)
R352	1-216-041-00	METAL CHIP	470	5%	1/10W (AS,B,MN,NP,NR,VC)
R353	1-216-022-00	METAL CHIP	75	5%	1/10W
R354	1-216-049-91	METAL GLAZE	1K	5%	1/10W (AS,B,MN,NP,NR,VC)
R355	1-216-295-91	CONDUCTOR, CHIP(2012)			
R356	1-216-041-00	METAL CHIP	470	5%	1/10W (AS,B,MN,NP,NR,VC)
R357	1-216-295-91	CONDUCTOR, CHIP(2012)			
R358	1-216-295-91	CONDUCTOR, CHIP(2012)			
R359	1-216-295-91	CONDUCTOR, CHIP(2012)			
R360	1-216-295-91	CONDUCTOR, CHIP(2012)			
R361	1-216-041-00	METAL CHIP	470	5%	1/10W (AS,B,MN,NP,NR,VC)
R362	1-216-022-00	METAL CHIP	75	5%	1/10W
R363	1-216-295-91	CONDUCTOR, CHIP(2012)			
R364	1-216-295-91	CONDUCTOR, CHIP(2012)			
R365	1-216-295-91	CONDUCTOR, CHIP(2012)			
R366	1-216-022-00	METAL CHIP	75	5%	1/10W
R367	1-216-295-91	CONDUCTOR, CHIP(2012)			
R368	1-216-295-91	CONDUCTOR, CHIP(2012)			(AS,B,MN,NP,NR,VC)
R369	1-216-022-00	METAL CHIP	75	5%	1/10W
R370	1-216-295-91	CONDUCTOR, CHIP(2012)			(AS,B,MN,NP,NR,VC)
R371	1-216-295-91	CONDUCTOR, CHIP(2012)			
R372	1-216-295-91	CONDUCTOR, CHIP(2012)			
R373	1-216-295-91	CONDUCTOR, CHIP(2012)			
R374	1-216-295-91	CONDUCTOR, CHIP(2012)			
R376	1-216-295-91	CONDUCTOR, CHIP(2012)			
R377	1-216-295-91	CONDUCTOR, CHIP(2012)			(AS,B,MN,NP,NR,VC)
R378	1-216-295-91	CONDUCTOR, CHIP(2012)			
R379	1-216-295-91	CONDUCTOR, CHIP(2012)			(AS,B,MN,NP,NR,VC)
R380	1-216-022-00	METAL CHIP	75	5%	1/10W (AS,B,MN,NP,NR,VC)
R381	1-216-095-00	METAL CHIP	82K	5%	1/10W (AS,B,MN,NP,NR,VC)
R382	1-216-295-91	CONDUCTOR, CHIP(2012)		(UX)	
R383	1-216-041-00	METAL CHIP	470	5%	1/10W
R384	1-216-059-00	METAL CHIP	2.7K	5%	1/10W
R385	1-216-081-00	METAL CHIP	22K	5%	1/10W
R387	1-216-295-91	CONDUCTOR, CHIP(2012)			
R389	1-216-295-91	CONDUCTOR, CHIP(2012)			
R391	1-216-295-91	CONDUCTOR, CHIP(2012)			
R393	1-216-295-91	CONDUCTOR, CHIP(2012)			
R395	1-216-033-00	METAL CHIP	220	5%	1/10W
R396	1-216-033-00	METAL CHIP	220	5%	1/10W
R397	1-216-033-00	METAL CHIP	220	5%	1/10W
R398	1-216-033-00	METAL CHIP	220	5%	1/10W
R399	1-216-041-00	METAL CHIP	470	5%	1/10W
R400	1-216-041-00	METAL CHIP	470	5%	1/10W

Ref. No.	Part No.	Description			Remarks
*	A-7073-109-A	FL-79 BOARD, COMPLETE			
		**********			
					(Ref.No.: 6,000 Series)
*	3-947-530-01	HOLDER, TERMINAL, S			
		< CAPACITOR >			
C201	1-164-232-11	CERAMIC CHIP	0.01uF		50V
C222	1-163-009-11	CERAMIC CHIP	0.001uF	10%	50V
C223	1-163-038-00	CERAMIC CHIP	0.1uF		25V
		< CONNECTOR >			
CN201	1-565-777-11	CONNECTOR, BOARD TO BOARD 8P			
CN202	1-568-788-21	PIN, CONNECTOR 11P			
		< JACK >			
CNJ201	1-566-850-31	CONNECTOR, (S) TERMINAL 4P			
CNJ202	1-695-865-11	JACK, PIN 3P			
		< DIODE >			
D201	8-719-970-67	DIODE SLR-34MCA49			
D211	8-719-422-62	DIODE MA8062-L-TX			
D212	8-719-421-59	DIODE MA3075WA-(TX)			
D213	8-719-421-59	DIODE MA3075WA-(TX)			
D214	8-719-421-59	DIODE MA3075WA-(TX)			
D215	8-719-421-59	DIODE MA3075WA-(TX)			
D216	8-719-421-59	DIODE MA3075WA-(TX)			
D222	8-719-404-49	DIODE MA111			
		< FILTER >			
FL201	1-236-163-11	ENCAPSULATED COMPONENT			
FL202	1-236-163-11	ENCAPSULATED COMPONENT			
		< IC >			
IC202	8-749-011-05	IC GP1U28X			
		< JUMPER RESISTOR >			
JR201	1-216-295-00	METAL CHIP	0	5%	1/10W
JR202	1-216-295-00	METAL CHIP	0	5%	1/10W
		< RESISTOR >			
R201	1-216-031-00	METAL CHIP	180	5%	1/10W
R204	1-216-057-00	METAL CHIP	2.2K	5%	1/10W
R205	1-216-057-00	METAL CHIP	2.2K	5%	1/10W
R212	1-216-022-00	METAL CHIP	75	5%	1/10W
R213	1-216-022-00	METAL CHIP	75	5%	1/10W
R214	1-216-022-00	METAL CHIP	75	5%	1/10W
R215	1-216-105-91	METAL GLAZE	220K	5%	1/10W
R216	1-216-105-91	METAL GLAZE	220K	5%	1/10W
R221	1-216-057-00	METAL CHIP	2.2K	5%	1/10W
R222	1-216-057-00	METAL CHIP	2.2K	5%	1/10W
R223	1-216-295-00	METAL CHIP	0	5%	1/10W
R224	1-216-295-00	METAL CHIP	0	5%	1/10W
		< SWITCH >			
S201	1-571-977-11	SWITCH, TACTIL(ON/STANDBY)			
S202	1-571-977-11	SWITCH, TACTIL(Video 8 EJECT)			
S205	1-571-977-11	SWITCH, TACTIL			(Video 8 HIGH SPEED REWIND)
S207	1-571-977-11	SWITCH, TACTIL(Video 8)			

Ref. No.	Part No.	Description			Remarks
*	A-7066-980-A	FR-113 (UX) BOARD,COMPLETE			
		**********			
					(Ref.No.: 6,000 Series)
*	3-960-787-01	HOLDER, FL			
		< BUZZER >			
BZ001	1-529-104-11	BUZZER, PIEZOELECTRIC			
		< CAPACITOR >			
C001	1-164-004-11	CERAMIC CHIP	0.1uF	10%	25V
C002	1-107-682-11	CERAMIC CHIP	1uF	10%	16V
C003	1-163-234-11	CERAMIC CHIP	20PF	5%	50V
C004	1-163-235-11	CERAMIC CHIP	22PF	5%	50V
C006	1-164-004-11	CERAMIC CHIP	0.1uF	10%	25V
C007	1-164-004-11	CERAMIC CHIP	0.1uF	10%	25V
C008	1-164-232-11	CERAMIC CHIP	0.01uF		50V
C009	1-161-494-00	CERAMIC	0.022uF		25V
C010	1-164-346-11	CERAMIC CHIP	1uF		16V
C102	1-164-346-11	CERAMIC CHIP	1uF		16V
C104	1-163-077-00	CERAMIC CHIP	0.1uF	10%	25V
C108	1-161-494-00	CERAMIC	0.022uF		25V
		< CONNECTOR >			
CN001	1-774-471-41	CONNECTOR, FFC/FPC 5P			
CN002	1-774-494-41	CONNECTOR, FFC/FPC 28P			
CN101	1-568-669-11	CONNECTOR, BOARD TO BOARD 8P			
* CN104	1-695-328-11	PIN, CONNECTOR (PC BOARD) 5P			
		< DIODE >			
D001	8-719-210-33	DIODE EC10DS2			
D151	8-719-940-XX	LED SLR-34VCA49			
D152	8-719-940-XX	LED SLR-34VCA49			
D153	8-719-946-30	LED SLR34DC3			
D154	8-719-970-67	LED SLR-34MCA49			
D155	8-719-970-67	LED SLR-34MCA49			
D161	8-719-970-67	LED SLR-34MCA49			
D162	8-719-940-XX	LED SLR-34VCA49			
D163	8-719-940-XX	LED SLR-34VCA49			
D164	8-719-970-67	LED SLR-34MCA49			
D165	8-719-946-30	LED SLR34DC3			
D166	8-719-940-XX	LED SLR-34VCA49			
D168	8-719-946-30	LED SLR34DC3			
D169	8-719-946-30	LED SLR34DC3			
D170	8-719-940-XX	LED SLR-34VCA49			
D171	8-719-946-30	LED SLR34DC3			
D172	8-719-970-67	LED SLR-34MCA49			
D173	8-719-970-67	LED SLR-34MCA49			
		< FILTER >			
FL101	1-517-321-11	TUBE, FLUORESCENT INDICATOR			
		< IC >			
IC001	8-759-460-56	IC MB89096RPF-G-235-BND			
IC002	8-759-279-61	IC ST93CS66B1			
IC101	8-759-448-24	IC NJU3718G(TE2)			

Ref. No.	Part No.	Description			Remarks
		< JUMPER RESISTOR >			
JR001	1-216-296-00	METAL CHIP	0	5%	1/8W
JR002	1-216-295-00	METAL CHIP	0	5%	1/10W
JR003	1-216-296-00	METAL CHIP	0	5%	1/8W
JR004	1-216-296-00	METAL CHIP	0	5%	1/8W
JR005	1-216-295-00	METAL CHIP	0	5%	1/10W
JR006	1-216-295-00	METAL CHIP	0	5%	1/10W
JR007	1-216-296-00	METAL CHIP	0	5%	1/8W
JR008	1-216-295-00	METAL CHIP	0	5%	1/10W
JR009	1-216-295-00	METAL CHIP	0	5%	1/10W
JR011	1-216-296-00	METAL CHIP	0	5%	1/8W
JR016	1-216-296-00	METAL CHIP	0	5%	1/8W
JR017	1-216-296-00	METAL CHIP	0	5%	1/8W
JR018	1-216-296-00	METAL CHIP	0	5%	1/8W
JR019	1-216-296-00	METAL CHIP	0	5%	1/8W
JR020	1-216-296-00	METAL CHIP	0	5%	1/8W
JR021	1-216-296-00	METAL CHIP	0	5%	1/8W
JR022	1-216-295-00	METAL CHIP	0	5%	1/10W
JR023	1-216-296-00	METAL CHIP	0	5%	1/8W
JR024	1-216-296-00	METAL CHIP	0	5%	1/8W
JR026	1-216-296-00	METAL CHIP	0	5%	1/8W
JR027	1-216-296-00	METAL CHIP	0	5%	1/8W
JR028	1-216-296-00	METAL CHIP	0	5%	1/8W
JR029	1-216-295-00	METAL CHIP	0	5%	1/10W
		< RESISTOR >			
R001	1-216-222-00	METAL GLAZE	10K	5%	1/8W
R002	1-216-222-00	METAL GLAZE	10K	5%	1/8W
R004	1-216-198-91	METAL GLAZE	1K	5%	1/8W
R008	1-216-222-00	METAL GLAZE	10K	5%	1/8W
R009	1-249-428-11	CARBON	8.2K	5%	1/4W F
R010	1-216-190-00	METAL GLAZE	470	5%	1/8W
R011	1-216-190-00	METAL GLAZE	470	5%	1/8W
R012	1-216-073-00	METAL CHIP	10K	5%	1/10W
R013	1-216-041-00	METAL CHIP	470	5%	1/10W
R014	1-216-041-00	METAL CHIP	470	5%	1/10W
R015	1-216-113-00	METAL CHIP	470K	5%	1/10W
R016	1-216-222-00	METAL GLAZE	10K	5%	1/8W
R017	1-216-073-00	METAL CHIP	10K	5%	1/10W
R018	1-216-073-00	METAL CHIP	10K	5%	1/10W
R019	1-216-222-00	METAL GLAZE	10K	5%	1/8W
R020	1-249-417-11	CARBON	1K	5%	1/4W F
R021	1-216-073-00	METAL CHIP	10K	5%	1/10W
R022	1-216-198-91	METAL GLAZE	1K	5%	1/8W
R023	1-216-198-91	METAL GLAZE	1K	5%	1/8W
R024	1-249-417-11	CARBON	1K	5%	1/4W F
R026	1-249-429-11	CARBON	10K	5%	1/4W
R027	1-216-041-00	METAL CHIP	470	5%	1/10W
R028	1-216-041-00	METAL CHIP	470	5%	1/10W
R029	1-216-041-00	METAL CHIP	470	5%	1/10W
R030	1-216-073-00	METAL CHIP	10K	5%	1/10W
R031	1-216-073-00	METAL CHIP	10K	5%	1/10W
R032	1-216-222-00	METAL GLAZE	10K	5%	1/8W
R033	1-216-073-00	METAL CHIP	10K	5%	1/10W
R034	1-216-073-00	METAL CHIP	10K	5%	1/10W
R035	1-249-417-11	CARBON	1K	5%	1/4W F
R036	1-216-049-00	METAL CHIP	1K	5%	1/10W
R037	1-249-417-11	CARBON	1K	5%	1/4W F
R038	1-249-417-11	CARBON	1K	5%	1/4W F
R039	1-249-417-11	CARBON	1K	5%	1/4W F
R040	1-216-190-00	METAL GLAZE	470	5%	1/8W

FR-113 **MH-18**

Ref. No.	Part No.	Description			Remarks
R041	1-216-041-00	METAL CHIP	470	5%	1/10W
R042	1-216-041-00	METAL CHIP	470	5%	1/10W
R101	1-216-198-91	METAL GLAZE	1K	5%	1/8W
R102	1-216-049-00	METAL CHIP	1K	5%	1/10W
R103	1-249-417-11	CARBON	1K	5%	1/4W F
R104	1-249-417-11	CARBON	1K	5%	1/4W F
R105	1-216-065-00	METAL CHIP	4.7K	5%	1/10W
R106	1-216-210-00	METAL GLAZE	3.3K	5%	1/8W
R107	1-216-057-00	METAL CHIP	2.2K	5%	1/10W
R108	1-249-434-11	CARBON	27K	5%	1/4W
R109	1-249-428-11	CARBON	8.2K	5%	1/4W F
R110	1-216-073-00	METAL CHIP	10K	5%	1/10W
R111	1-216-081-00	METAL CHIP	22K	5%	1/10W
R114	1-216-057-00	METAL CHIP	2.2K	5%	1/10W
R115	1-216-057-00	METAL CHIP	2.2K	5%	1/10W
R116	1-216-061-00	METAL CHIP	3.3K	5%	1/10W
R117	1-216-065-00	METAL CHIP	4.7K	5%	1/10W
R118	1-216-057-00	METAL CHIP	2.2K	5%	1/10W
R119	1-216-057-00	METAL CHIP	2.2K	5%	1/10W
R121	1-249-421-11	CARBON	2.2K	5%	1/4W F
R122	1-249-421-11	CARBON	2.2K	5%	1/4W F
R123	1-249-432-11	CARBON	18K	5%	1/4W
R124	1-216-081-00	METAL CHIP	22K	5%	1/10W
R130	1-249-421-11	CARBON	2.2K	5%	1/4W F
R131	1-216-057-00	METAL CHIP	2.2K	5%	1/10W
R132	1-247-843-11	CARBON	3.3K	5%	1/4W
R141	1-216-057-00	METAL CHIP	2.2K	5%	1/10W
R142	1-216-057-00	METAL CHIP	2.2K	5%	1/10W
R143	1-216-061-00	METAL CHIP	3.3K	5%	1/10W
R151	1-249-409-11	CARBON	220	5%	1/4W F
R152	1-249-411-11	CARBON	330	5%	1/4W
R153	1-249-409-11	CARBON	220	5%	1/4W F
R154	1-249-409-11	CARBON	220	5%	1/4W F
R155	1-216-031-00	METAL CHIP	180	5%	1/10W
R157	1-216-178-00	METAL GLAZE	150	5%	1/8W
R158	1-249-407-11	CARBON	150	5%	1/4W F
R159	1-216-033-00	METAL CHIP	220	5%	1/10W
R160	1-216-033-00	METAL CHIP	220	5%	1/10W
R161	1-216-037-00	METAL CHIP	330	5%	1/10W
R162	1-216-033-00	METAL CHIP	220	5%	1/10W
R163	1-216-033-00	METAL CHIP	220	5%	1/10W
R164	1-216-031-00	METAL CHIP	180	5%	1/10W
R165	1-216-182-00	METAL GLAZE	220	5%	1/8W
R166	1-216-182-00	METAL GLAZE	220	5%	1/8W
R167	1-216-033-00	METAL CHIP	220	5%	1/10W
R170	1-216-180-00	METAL GLAZE	180	5%	1/8W
		< SWITCH >			
S101	1-571-977-11	SWITCH, TACTIL(DUBBING)			
S102	1-571-977-11	SWITCH, TACTIL(VHS TO Video 8)			
S103	1-571-977-11	SWITCH, TACTIL(Video 8 TO VHS)			
S106	1-571-977-11	SWITCH, TACTIL(VHS EJECT)			
S107	1-571-977-11	SWITCH, TACTIL(VHS)			
S108	1-571-977-11	SWITCH, TACTIL(PROGRAM +)			
S109	1-571-977-11	SWITCH, TACTIL(PROGRAM -)			
S111	1-571-977-11	SWITCH, TACTIL(REC)			
S112	1-571-977-11	SWITCH, TACTIL(TIMER REC)			
S114	1-571-977-11	SWITCH, TACTIL(QUICK TIMER)			

Ref. No.	Part No.	Description			Remarks
S115	1-571-977-11	SWITCH, TACTIL(RF-CH)			
S116	1-571-977-11	SWITCH, TACTIL(EASY SET UP)			
S117	1-571-977-11	SWITCH, TACTIL(STOP)			
S118	1-571-977-11	SWITCH, TACTIL(EDIT STANDBY/START)			
S119	1-571-977-11	SWITCH, TACTIL(EDIT ON(DIR)/OFF)			
S121	1-571-977-11	SWITCH, TACTIL(TV/VTR)			
S122	1-571-977-11	SWITCH, TACTIL(AUDIO DUB(VHS))			
S123	1-571-977-11	SWITCH, TACTIL(COUNTER RESET)			
S124	1-571-977-11	SWITCH, TACTIL(TAPE SPEED SP/LP(VHS))			
S130	1-571-977-11	SWITCH, TACTIL(REW)			
S131	1-571-977-11	SWITCH, TACTIL(FF)			
S132	1-571-977-11	SWITCH, TACTIL(PAUSE)			
S141	1-572-907-11	SWITCH, SLIDE(TAPE SELECT)			
S142	1-692-820-11	SWITCH, SLIDE(COMMAND MODE)			
		< VIBRATOR >			
X001	1-579-463-11	VIBRATOR, CRYSTAL 32.768kHz			
X002	1-579-126-11	VIBRATOR, CERAMIC 12MHz			
*	A-7066-976-A	MH-18 (UX) BOARD, COMPLETE			
		**********			
		(Ref.No.: 2,000 Series)			
*	3-741-933-01	HEAT SINK			
*	3-967-895-01	HEAT SINK, CAP			
	7-682-948-01	SCREW +PSW 3X8			
	7-685-645-79	SCREW +BVTP 3X6 TYPE2 TT(B)			
	7-685-646-79	SCREW +BVTP 3X8 TYPE2 IT-3			
		< CAPACITOR >			
C001	1-163-235-11	CERAMIC CHIP	22PF	5%	50V
C002	1-164-346-11	CERAMIC CHIP	1uF		16V
C003	1-163-229-11	CERAMIC CHIP	12PF	5%	50V
C004	1-163-229-11	CERAMIC CHIP	12PF	5%	50V
C005	1-126-924-11	ELECT	330uF	20%	6.3V
C006	1-126-916-11	ELECT	1000uF	20%	6.3V
C007	1-164-346-11	CERAMIC CHIP	1uF		16V
C008	1-164-346-11	CERAMIC CHIP	1uF		16V
C014	1-163-017-00	CERAMIC CHIP	0.0047uF	5%	50V
C023	1-164-346-11	CERAMIC CHIP	1uF		16V
C028	1-163-229-11	CERAMIC CHIP	12PF	5%	50V
C029	1-163-229-11	CERAMIC CHIP	12PF	5%	50V
C030	1-163-137-00	CERAMIC CHIP	680PF	5%	50V
C036	1-164-232-11	CERAMIC CHIP	0.01uF		50V
C037	1-163-012-00	CERAMIC CHIP	0.0018uF	5%	50V
C040	1-163-011-11	CERAMIC CHIP	0.0015uF	10%	50V
C043	1-126-933-11	ELECT	100uF	20%	10V
C045	1-163-239-11	CERAMIC CHIP	33PF	5%	50V
C051	1-164-232-11	CERAMIC CHIP	0.01uF		50V
C053	1-163-009-11	CERAMIC CHIP	0.001uF	10%	50V
C056	1-163-145-00	CERAMIC CHIP	0.0015uF	5%	50V
C058	1-164-343-11	CERAMIC CHIP	0.056uF	10%	25V
C059	1-216-295-00	METAL CHIP	0	5%	1/10W
C061	1-164-489-11	CERAMIC CHIP	0.22uF	10%	16V
C064	1-104-760-11	CERAMIC CHIP	0.047uF	10%	50V
C065	1-163-037-11	CERAMIC CHIP	0.022uF	10%	25V
C066	1-163-011-11	CERAMIC CHIP	0.0015uF	10%	50V
C067	1-163-011-11	CERAMIC CHIP	0.0015uF	10%	50V
C068	1-164-489-11	CERAMIC CHIP	0.22uF	10%	16V
C069	1-164-232-11	CERAMIC CHIP	0.01uF		50V

Ref. No.	Part No.	Description			Remarks
C071	1-163-037-11	CERAMIC CHIP	0.022uF	10%	25V
C073	1-162-587-11	CERAMIC CHIP	0.039uF	10%	25V
C075	1-164-232-11	CERAMIC CHIP	0.01uF		50V
C077	1-164-004-11	CERAMIC CHIP	0.1uF	10%	25V
C078	1-164-489-11	CERAMIC CHIP	0.22uF	10%	16V
C083	1-164-232-11	CERAMIC CHIP	0.01uF		50V
C084	1-164-232-11	CERAMIC CHIP	0.01uF		50V
C085	1-163-009-11	CERAMIC CHIP	0.001uF	10%	50V
C086	1-163-037-11	CERAMIC CHIP	0.022uF	10%	25V
C087	1-163-009-11	CERAMIC CHIP	0.001uF	10%	50V
C088	1-163-037-11	CERAMIC CHIP	0.022uF	10%	25V
C089	1-163-037-11	CERAMIC CHIP	0.022uF	10%	25V
C090	1-104-760-11	CERAMIC CHIP	0.047uF	10%	50V
C091	1-164-232-11	CERAMIC CHIP	0.01uF		50V
C092	1-164-489-11	CERAMIC CHIP	0.22uF	10%	16V
C093	1-164-489-11	CERAMIC CHIP	0.22uF	10%	16V
C094	1-163-009-11	CERAMIC CHIP	0.001uF	10%	50V
C095	1-163-038-00	CERAMIC CHIP	0.1uF		25V
C096	1-126-933-11	ELECT	100uF	20%	10V
C097	1-126-964-11	ELECT	10uF	20%	50V
C098	1-126-964-11	ELECT	10uF	20%	50V
C099	1-164-232-11	CERAMIC CHIP	0.01uF		50V
C101	1-164-232-11	CERAMIC CHIP	0.01uF		50V
C102	1-164-232-11	CERAMIC CHIP	0.01uF		50V
C103	1-164-232-11	CERAMIC CHIP	0.01uF		50V
C104	1-164-232-11	CERAMIC CHIP	0.01uF		50V
C105	1-163-038-00	CERAMIC CHIP	0.1uF		25V
C106	1-163-038-00	CERAMIC CHIP	0.1uF		25V
C107	1-128-551-11	ELECT	22uF	20%	25V
C108	1-164-232-11	CERAMIC CHIP	0.01uF		50V
C109	1-126-925-11	ELECT	470uF	20%	10V
C110	1-124-584-00	ELECT	100uF	20%	10V
C201	1-126-933-11	ELECT	100uF	20%	10V
C202	1-126-961-11	ELECT	2.2uF	20%	50V
C203	1-126-961-11	ELECT	2.2uF	20%	50V
C204	1-164-232-11	CERAMIC CHIP	0.01uF		50V
C205	1-164-232-11	CERAMIC CHIP	0.01uF		50V
C206	1-126-966-11	ELECT	33uF	20%	16V
C207	1-126-966-11	ELECT	33uF	20%	16V
C208	1-164-232-11	CERAMIC CHIP	0.01uF		50V
C209	1-126-960-11	ELECT	1uF	20%	50V
C211	1-126-933-11	ELECT	100uF	20%	10V
C212	1-126-963-11	ELECT	4.7uF	20%	50V
C213	1-126-960-11	ELECT	1uF	20%	50V
C215	1-163-017-00	CERAMIC CHIP	0.0047uF	5%	50V
C217	1-115-869-11	ELECT	0.33uF	20%	50V
C219	1-126-967-11	ELECT	47uF	20%	10V
C220	1-126-961-11	ELECT	2.2uF	20%	50V
C221	1-164-232-11	CERAMIC CHIP	0.01uF		50V
C222	1-115-870-11	ELECT	0.47uF	20%	50V
C223	1-126-961-11	ELECT	2.2uF	20%	50V
C224	1-126-962-11	ELECT	3.3uF	20%	50V
C225	1-128-551-11	ELECT	22uF	20%	25V
C226	1-164-161-11	CERAMIC CHIP	0.0022uF	10%	100V
C227	1-163-009-11	CERAMIC CHIP	0.001uF	10%	50V
C228	1-126-964-11	ELECT	10uF	20%	50V
C229	1-164-161-11	CERAMIC CHIP	0.0022uF	10%	100V
C230	1-164-232-11	CERAMIC CHIP	0.01uF		50V
C231	1-163-131-00	CERAMIC CHIP	390PF	5%	50V
C232	1-128-551-11	ELECT	22uF	20%	25V

Ref. No.	Part No.	Description			Remarks
C233	1-126-962-11	ELECT	3.3uF	20%	50V
C234	1-126-961-11	ELECT	2.2uF	20%	50V
C235	1-115-870-11	ELECT	0.47uF	20%	50V
C236	1-164-232-11	CERAMIC CHIP	0.01uF		50V
C237	1-126-961-11	ELECT	2.2uF	20%	50V
C238	1-126-967-11	ELECT	47uF	20%	10V
C239	1-115-869-11	ELECT	0.33uF	20%	50V
C240	1-163-017-00	CERAMIC CHIP	0.0047uF	5%	50V
C241	1-164-232-11	CERAMIC CHIP	0.01uF		50V
C242	1-164-232-11	CERAMIC CHIP	0.01uF		50V
C243	1-164-232-11	CERAMIC CHIP	0.01uF		50V
C244	1-164-232-11	CERAMIC CHIP	0.01uF		50V
C245	1-164-232-11	CERAMIC CHIP	0.01uF		50V
C246	1-126-961-11	ELECT	2.2uF	20%	50V
C260	1-126-960-11	ELECT	1uF	20%	50V
C261	1-126-960-11	ELECT	1uF	20%	50V
C262	1-163-121-00	CERAMIC CHIP	150PF	5%	50V
C263	1-128-551-11	ELECT	22uF	20%	25V
C301	1-126-967-11	ELECT	47uF	20%	10V
C302	1-164-232-11	CERAMIC CHIP	0.01uF		50V
C303	1-126-967-11	ELECT	47uF	20%	10V
C304	1-164-232-11	CERAMIC CHIP	0.01uF		50V
C305	1-164-232-11	CERAMIC CHIP	0.01uF		50V
C307	1-126-967-11	ELECT	47uF	20%	10V
C314	1-163-251-11	CERAMIC CHIP	100PF	5%	50V
C315	1-164-232-11	CERAMIC CHIP	0.01uF		50V
C336	1-164-232-11	CERAMIC CHIP	0.01uF		50V
C387	1-126-961-11	ELECT	2.2uF	20%	50V
C388	1-128-551-11	ELECT	22uF	20%	25V
C389	1-163-009-11	CERAMIC CHIP	0.001uF	10%	50V
C396	1-163-017-00	CERAMIC CHIP	0.0047uF	5%	50V
C397	1-164-161-11	CERAMIC CHIP	0.0022uF	10%	100V
C398	1-164-232-11	CERAMIC CHIP	0.01uF		50V
C399	1-126-967-11	ELECT	47uF	20%	10V
C410	1-164-004-11	CERAMIC CHIP	0.1uF	10%	25V
C501	1-126-933-11	ELECT	100uF	20%	10V
C502	1-164-232-11	CERAMIC CHIP	0.01uF		50V
C503	1-163-235-11	CERAMIC CHIP	22PF	5%	50V
C504	1-163-237-11	CERAMIC CHIP	27PF	5%	50V
C505	1-163-231-11	CERAMIC CHIP	15PF	5%	50V
C506	1-163-227-11	CERAMIC CHIP	10PF	0.5PF	50V
C509	1-163-237-11	CERAMIC CHIP	27PF	5%	50V
C510	1-163-231-11	CERAMIC CHIP	15PF	5%	50V
C511	1-163-229-11	CERAMIC CHIP	12PF	5%	50V
C512	1-163-127-00	CERAMIC CHIP	270PF	5%	50V
C513	1-127-515-11	ELECT(SOLID)	47uF	20%	6.3V
C514	1-164-232-11	CERAMIC CHIP	0.01uF		50V
C515	1-163-136-00	CERAMIC CHIP	620PF	5%	50V
C516	1-163-099-00	CERAMIC CHIP	18PF	5%	50V
C517	1-164-232-11	CERAMIC CHIP	0.01uF		50V
C518	1-163-038-00	CERAMIC CHIP	0.1uF		25V
C519	1-164-232-11	CERAMIC CHIP	0.01uF		50V
C520	1-164-232-11	CERAMIC CHIP	0.01uF		50V
C522	1-163-227-11	CERAMIC CHIP	10PF	0.5PF	50V
C523	1-164-232-11	CERAMIC CHIP	0.01uF		50V
C524	1-164-232-11	CERAMIC CHIP	0.01uF		50V
C525	1-164-232-11	CERAMIC CHIP	0.01uF		50V
C526	1-164-232-11	CERAMIC CHIP	0.01uF		50V
C527	1-163-227-11	CERAMIC CHIP	10PF	0.5PF	50V
C528	1-163-251-11	CERAMIC CHIP	100PF	5%	50V

MH-18

Ref. No.	Part No.	Description			Remarks
C529	1-163-243-11	CERAMIC CHIP	47PF	5%	50V
C530	1-163-251-11	CERAMIC CHIP	100PF	5%	50V
C531	1-163-138-00	CERAMIC CHIP	750PF	5%	50V
C533	1-163-038-00	CERAMIC CHIP	0.1uF		25V
C534	1-163-257-11	CERAMIC CHIP	180PF	5%	50V
C535	1-164-232-11	CERAMIC CHIP	0.01uF		50V
C536	1-163-248-11	CERAMIC CHIP	75PF	5%	50V
C537	1-163-113-00	CERAMIC CHIP	68PF	5%	50V
C538	1-164-232-11	CERAMIC CHIP	0.01uF		50V
C539	1-163-243-11	CERAMIC CHIP	47PF	5%	50V
C540	1-164-232-11	CERAMIC CHIP	0.01uF		50V
C541	1-163-102-00	CERAMIC CHIP	24PF	5%	50V
C542	1-163-113-00	CERAMIC CHIP	68PF	5%	50V
C543	1-163-243-11	CERAMIC CHIP	47PF	5%	50V
C544	1-163-112-00	CERAMIC CHIP	62PF	5%	50V
C545	1-164-232-11	CERAMIC CHIP	0.01uF		50V
C546	1-163-118-00	CERAMIC CHIP	110PF	5%	50V
C547	1-163-241-11	CERAMIC CHIP	39PF	5%	50V
C548	1-163-239-11	CERAMIC CHIP	33PF	5%	50V
C549	1-163-014-00	CERAMIC CHIP	0.0027uF	5%	50V
C551	1-164-232-11	CERAMIC CHIP	0.01uF		50V
C552	1-164-232-11	CERAMIC CHIP	0.01uF		50V
C553	1-126-964-11	ELECT	10uF	20%	50V
C554	1-164-232-11	CERAMIC CHIP	0.01uF		50V
C559	1-164-232-11	CERAMIC CHIP	0.01uF		50V
C560	1-164-232-11	CERAMIC CHIP	0.01uF		50V
C561	1-164-232-11	CERAMIC CHIP	0.01uF		50V
C562	1-163-099-00	CERAMIC CHIP	18PF	5%	50V
C563	1-163-224-11	CERAMIC CHIP	7PF	0.25PF	50V
C565	1-126-964-11	ELECT	10uF	20%	50V
C566	1-126-964-11	ELECT	10uF	20%	50V
C567	1-164-232-11	CERAMIC CHIP	0.01uF		50V
C568	1-163-231-11	CERAMIC CHIP	15PF	5%	50V
C569	1-163-091-00	CERAMIC CHIP	8PF		50V
C570	1-164-004-11	CERAMIC CHIP	0.1uF	10%	25V
C571	1-164-004-11	CERAMIC CHIP	0.1uF	10%	25V
C572	1-164-222-11	CERAMIC CHIP	0.22uF		25V
C573	1-164-004-11	CERAMIC CHIP	0.1uF	10%	25V
C574	1-164-232-11	CERAMIC CHIP	0.01uF		50V
C575	1-164-232-11	CERAMIC CHIP	0.01uF		50V
C576	1-163-235-11	CERAMIC CHIP	22PF	5%	50V
C577	1-163-251-11	CERAMIC CHIP	100PF	5%	50V
C578	1-126-967-11	ELECT	47uF	20%	10V
C579	1-126-967-11	ELECT	47uF	20%	10V
C580	1-126-963-11	ELECT	4.7uF	20%	50V
C581	1-163-019-00	CERAMIC CHIP	0.0068uF	10%	50V
C582	1-126-960-11	ELECT	1uF	20%	50V
C583	1-163-037-11	CERAMIC CHIP	0.022uF	10%	25V
C584	1-124-254-00	ELECT	0.68uF	20%	50V
C585	1-164-232-11	CERAMIC CHIP	0.01uF		50V
C586	1-126-960-11	ELECT	1uF	20%	50V
C587	1-126-157-11	ELECT	10uF	20%	16V
C590	1-164-004-11	CERAMIC CHIP	0.1uF	10%	25V
C591	1-164-004-11	CERAMIC CHIP	0.1uF	10%	25V
C592	1-128-551-11	ELECT	22uF	20%	25V
C593	1-128-551-11	ELECT	22uF	20%	25V
C594	1-164-232-11	CERAMIC CHIP	0.01uF		50V
C595	1-126-964-11	ELECT	10uF	20%	50V
C596	1-126-962-11	ELECT	3.3uF	20%	50V
C597	1-164-232-11	CERAMIC CHIP	0.01uF		50V

Ref. No.	Part No.	Description			Remarks
C598	1-126-964-11	ELECT	10uF	20%	50V
C599	1-163-038-00	CERAMIC CHIP	0.1uF		25V
C600	1-164-232-11	CERAMIC CHIP	0.01uF		50V
C602	1-163-038-00	CERAMIC CHIP	0.1uF		25V
C603	1-163-121-00	CERAMIC CHIP	150PF	5%	50V
C605	1-163-259-91	CERAMIC CHIP	220PF	5%	50V
C606	1-164-005-11	CERAMIC CHIP	0.47uF		25V
C607	1-126-964-11	ELECT	10uF	20%	50V
C608	1-126-960-11	ELECT	1uF	20%	50V
C609	1-126-157-11	ELECT	10uF	20%	16V
C610	1-164-232-11	CERAMIC CHIP	0.01uF		50V
C611	1-126-157-11	ELECT	10uF	20%	16V
C612	1-126-157-11	ELECT	10uF	20%	16V
C613	1-164-004-11	CERAMIC CHIP	0.1uF	10%	25V
C614	1-163-121-00	CERAMIC CHIP	150PF	5%	50V
C615	1-163-263-11	CERAMIC CHIP	330PF	5%	50V
C616	1-126-154-11	ELECT	47uF	20%	6.3V
C617	1-163-263-11	CERAMIC CHIP	330PF	5%	50V
C618	1-163-096-00	CERAMIC CHIP	13PF	5%	50V
C619	1-126-967-11	ELECT	47uF	20%	10V
C620	1-163-237-11	CERAMIC CHIP	27PF	5%	50V
C621	1-163-038-00	CERAMIC CHIP	0.1uF		25V
C622	1-128-551-11	ELECT	22uF	20%	25V
C623	1-164-232-11	CERAMIC CHIP	0.01uF		50V
C624	1-126-153-11	ELECT	22uF	20%	6.3V
C625	1-163-235-11	CERAMIC CHIP	22PF	5%	50V
C626	1-126-960-11	ELECT	1uF	20%	50V
C627	1-126-962-11	ELECT	3.3uF	20%	50V
C628	1-126-962-11	ELECT	3.3uF	20%	50V
C629	1-163-227-11	CERAMIC CHIP	10PF	0.5PF	50V
C630	1-126-964-11	ELECT	10uF	20%	50V
C631	1-163-131-00	CERAMIC CHIP	390PF	5%	50V
C632	1-164-232-11	CERAMIC CHIP	0.01uF		50V
C633	1-164-232-11	CERAMIC CHIP	0.01uF		50V
C634	1-163-120-00	CERAMIC CHIP	130PF	5%	50V
C635	1-164-232-11	CERAMIC CHIP	0.01uF		50V
C636	1-163-038-00	CERAMIC CHIP	0.1uF		25V
C637	1-163-243-11	CERAMIC CHIP	47PF	5%	50V
C638	1-163-113-00	CERAMIC CHIP	68PF	5%	50V
C639	1-126-962-11	ELECT	3.3uF	20%	50V
C641	1-163-243-11	CERAMIC CHIP	47PF	5%	50V
C642	1-164-232-11	CERAMIC CHIP	0.01uF		50V
C645	1-164-232-11	CERAMIC CHIP	0.01uF		50V
C646	1-163-251-11	CERAMIC CHIP	100PF	5%	50V
C647	1-163-121-00	CERAMIC CHIP	150PF	5%	50V
C648	1-163-249-11	CERAMIC CHIP	82PF	5%	50V
C649	1-128-551-11	ELECT	22uF	20%	25V
C650	1-126-967-11	ELECT	47uF	20%	10V
C652	1-163-251-11	CERAMIC CHIP	100PF	5%	50V
C653	1-163-237-11	CERAMIC CHIP	27PF	5%	50V
C654	1-126-960-11	ELECT	1uF	20%	50V
C655	1-163-251-11	CERAMIC CHIP	100PF	5%	50V
C656	1-126-962-11	ELECT	3.3uF	20%	50V
C657	1-126-962-11	ELECT	3.3uF	20%	50V
C659	1-164-232-11	CERAMIC CHIP	0.01uF		50V
C660	1-164-232-11	CERAMIC CHIP	0.01uF		50V
C662	1-164-232-11	CERAMIC CHIP	0.01uF		50V
C663	1-163-038-00	CERAMIC CHIP	0.1uF		25V
C665	1-163-038-00	CERAMIC CHIP	0.1uF		25V
C666	1-126-964-11	ELECT	10uF	20%	50V

Ref. No.	Part No.	Description			Remarks
C667	1-126-962-11	ELECT	3.3uF	20%	50V
C668	1-164-232-11	CERAMIC CHIP	0.01uF		50V
C669	1-128-551-11	ELECT	22uF	20%	25V
C670	1-128-551-11	ELECT	22uF	20%	25V
C671	1-164-232-11	CERAMIC CHIP	0.01uF		50V
C672	1-163-038-00	CERAMIC CHIP	0.1uF		25V
C674	1-163-239-11	CERAMIC CHIP	33PF	5%	50V
C675	1-163-239-11	CERAMIC CHIP	33PF	5%	50V
C676	1-164-232-11	CERAMIC CHIP	0.01uF		50V
C678	1-126-935-11	ELECT	470uF	20%	6.3V
C679	1-164-232-11	CERAMIC CHIP	0.01uF		50V
C681	1-163-253-11	CERAMIC CHIP	120PF	5%	50V
C682	1-126-964-11	ELECT	10uF	20%	50V
C683	1-163-038-00	CERAMIC CHIP	0.1uF		25V
C685	1-164-004-11	CERAMIC CHIP	0.1uF	10%	25V
C687	1-164-232-11	CERAMIC CHIP	0.01uF		50V
C688	1-164-232-11	CERAMIC CHIP	0.01uF		50V
C689	1-163-031-11	CERAMIC CHIP	0.01uF		50V
C690	1-163-120-00	CERAMIC CHIP	130PF	5%	50V
C691	1-126-967-11	ELECT	47uF	20%	10V
C692	1-164-232-11	CERAMIC CHIP	0.01uF		50V
C693	1-126-964-11	ELECT	10uF	20%	50V
C694	1-163-237-11	CERAMIC CHIP	27PF	5%	50V
C801	1-164-232-11	CERAMIC CHIP	0.01uF		50V
C802	1-126-967-11	ELECT	47uF	20%	10V
C803	1-126-967-11	ELECT	47uF	20%	16V
C804	1-164-004-11	CERAMIC CHIP	0.1uF	10%	25V
C805	1-164-004-11	CERAMIC CHIP	0.1uF	10%	25V
C806	1-164-004-11	CERAMIC CHIP	0.1uF	10%	25V
C807	1-107-823-11	CERAMIC CHIP	0.47uF	10%	16V
C808	1-163-809-11	CERAMIC CHIP	0.047uF	10%	25V
C809	1-163-017-00	CERAMIC CHIP	0.0047uF	5%	50V
C810	1-164-004-11	CERAMIC CHIP	0.1uF	10%	25V
C811	1-126-960-11	ELECT	1uF	20%	50V
C812	1-164-232-11	CERAMIC CHIP	0.01uF		50V
C813	1-164-232-11	CERAMIC CHIP	0.01uF		50V
C814	1-164-004-11	CERAMIC CHIP	0.1uF	10%	25V
C815	1-164-004-11	CERAMIC CHIP	0.1uF	10%	25V
C816	1-164-004-11	CERAMIC CHIP	0.1uF	10%	25V
C818	1-164-004-11	CERAMIC CHIP	0.1uF	10%	25V
C819	1-164-004-11	CERAMIC CHIP	0.1uF	10%	25V
C820	1-164-004-11	CERAMIC CHIP	0.1uF	10%	25V
C821	1-163-017-00	CERAMIC CHIP	0.0047uF	5%	50V
C822	1-163-017-00	CERAMIC CHIP	0.0047uF	5%	50V
C823	1-163-017-00	CERAMIC CHIP	0.0047uF	5%	50V
C824	1-124-589-11	ELECT	47uF	20%	16V
C825	1-163-017-00	CERAMIC CHIP	0.0047uF	5%	50V
C826	1-164-232-11	CERAMIC CHIP	0.01uF		50V
C827	1-164-232-11	CERAMIC CHIP	0.01uF		50V
C830	1-163-037-11	CERAMIC CHIP	0.022uF	10%	25V
C834	1-126-967-11	ELECT	47uF	20%	10V
C834	1-164-489-11	CERAMIC CHIP	0.22uF	10%	16V
C835	1-126-967-11	ELECT	47uF	20%	10V
C836	1-126-967-11	ELECT	47uF	20%	10V
C837	1-164-346-11	CERAMIC CHIP	1uF		16V
C838	1-163-017-00	CERAMIC CHIP	0.0047uF	5%	50V
C839	1-163-019-00	CERAMIC CHIP	0.0068uF	10%	50V
C840	1-163-037-11	CERAMIC CHIP	0.022uF	10%	25V
C841	1-163-017-00	CERAMIC CHIP	0.0047uF	5%	50V
C842	1-163-019-00	CERAMIC CHIP	0.0068uF	10%	50V

Ref. No.	Part No.	Description			Remarks
C843	1-163-037-11	CERAMIC CHIP	0.022uF	10%	25V
C844	1-163-809-11	CERAMIC CHIP	0.047uF	10%	25V
C845	1-163-809-11	CERAMIC CHIP	0.047uF	10%	25V
C846	1-164-004-11	CERAMIC CHIP	0.1uF	10%	25V
C847	1-124-589-11	ELECT	47uF	20%	16V
C848	1-104-329-11	CERAMIC CHIP	0.1uF	10%	50V
C849	1-104-329-11	CERAMIC CHIP	0.1uF	10%	50V
C850	1-164-232-11	CERAMIC CHIP	0.01uF		50V
C851	1-126-967-11	ELECT	47uF	20%	16V
C852	1-164-232-11	CERAMIC CHIP	0.01uF		50V
C854	1-163-235-11	CERAMIC CHIP	22PF	5%	50V
C900	1-163-038-00	CERAMIC CHIP	0.1uF		25V
C901	1-163-235-11	CERAMIC CHIP	22PF	5%	50V
C902	1-163-235-11	CERAMIC CHIP	22PF	5%	50V
C903	1-164-232-11	CERAMIC CHIP	0.01uF		50V
C905	1-164-232-11	CERAMIC CHIP	0.01uF		50V
C907	1-126-924-11	ELECT	330uF	20%	6.3V
C908	1-164-232-11	CERAMIC CHIP	0.01uF		50V
C909	1-163-137-00	CERAMIC CHIP	680PF	5%	50V
C911	1-163-124-00	CERAMIC CHIP	200PF	5%	50V
C912	1-163-007-11	CERAMIC CHIP	680PF	10%	50V

< CONNECTOR >

CN001	1-506-477-11	PIN, CONNECTOR 12P
CN002	1-506-467-11	PIN, CONNECTOR 2P
CN003	1-506-470-11	PIN, CONNECTOR 5P
CN004	1-695-338-11	PIN, CONNECTOR (PC BOARD) 15P
CN005	1-695-342-31	PIN, CONNECTOR (PC BOARD) 19P
CN006	1-778-772-11	CONNECTOR, FFC/FPC 7P
CN101	1-774-768-11	CONNECTOR, FFC/FPC 17P
CN102	1-506-473-11	PIN, CONNECTOR 8P
CN501	1-695-352-11	PIN, CONNECTOR (PC BOARD) 29P

< DIODE >

D002	8-719-200-02	DIODE 10E2
D004	8-719-801-78	DIODE 1SS184
D005	8-719-801-78	DIODE 1SS184
D201	8-719-404-49	DIODE MA111
D202	8-719-404-49	DIODE MA111
D301	8-719-404-49	DIODE MA111
D302	8-719-801-78	DIODE 1SS184
D502	8-719-801-78	DIODE 1SS184
D801	8-719-210-33	DIODE EC10DS2
D802	8-719-106-44	DIODE RD9.1M-B2

< FILTER >

FL501	1-415-764-21	DELAY LINE, LC
FL502	1-236-774-11	FILTER, LOW PASS (Y)
FL503	1-236-848-21	FILTER, LOW PASS
FL504	1-239-010-11	FILTER, LOW PASS (CCD.PAL.Y)

< IC >

IC002	8-752-883-56	IC CXP87140-071Q
IC008	8-759-070-96	IC CXA1481AQ-E2
IC009	8-759-510-73	IC BA10393F-E2
IC010	8-759-510-71	IC BA10358F-E2
IC202	8-759-510-73	IC BA10393F-E2

MH-18

Ref. No.	Part No.	Description	Remarks
IC203	8-759-290-72	IC AN3988NFBP	
IC302	8-759-009-06	IC MC14052BF	
IC501	8-759-513-71	IC PQ05RF21	
IC502	8-752-058-03	IC CXA1509AQ-T6	
IC503	8-759-925-74	IC SN74HC04ANS	
IC505	8-752-071-10	IC CXA1810AQ	
IC506	8-752-333-24	IC CXL1506M	
IC507	8-752-333-24	IC CXL1506M	
IC508	8-759-084-76	IC MM1111XFF	
IC509	8-759-009-19	IC MC14081BF	
IC510	8-759-084-76	IC MM1111XFF	
IC511	8-759-182-84	IC PQ05SZ5U	
IC801	8-759-327-67	IC LB1950V-TLM	
IC802	8-759-295-18	IC LB1807N-S	
IC803	8-759-700-07	IC NJM2903M	
IC804	8-759-058-50	IC BA10324AF-E2	
IC805	8-759-701-39	IC NJM3404AM	
IC806	8-759-170-92	IC PQ09SZ1T	
IC807	8-759-913-06	IC BA6209	
		< COIL >	
L001	1-410-482-31	INDUCTOR 100uH	
L004	1-410-462-11	INDUCTOR 2.2uH	
L006	1-412-446-31	INDUCTOR 3.3mH	
L007	1-408-621-31	INDUCTOR 330uH	
L008	1-410-087-31	INDUCTOR 10mH	
L009	1-410-482-31	INDUCTOR 100uH	
L010	1-408-425-00	INDUCTOR 220uH	
L101	1-412-951-11	INDUCTOR 10uH	
L102	1-414-402-11	INDUCTOR 47uH	
L301	1-410-462-11	INDUCTOR 2.2uH	
L501	1-410-470-11	INDUCTOR 10uH	
L502	1-410-468-11	INDUCTOR 6.8uH	
L503	1-410-476-11	INDUCTOR 33uH	
L504	1-408-413-00	INDUCTOR 22uH	
L505	1-408-424-00	INDUCTOR 180uH	
L506	1-408-413-00	INDUCTOR 22uH	
L507	1-408-413-00	INDUCTOR 22uH	
L508	1-408-411-00	INDUCTOR 15uH	
L509	1-408-411-00	INDUCTOR 15uH	
L510	1-408-429-00	INDUCTOR 470uH	
L511	1-408-413-00	INDUCTOR 22uH	
L512	1-408-413-00	INDUCTOR 22uH	
L513	1-410-466-41	INDUCTOR 4.7uH	
L514	1-408-422-00	INDUCTOR 120uH	
L515	1-410-482-31	INDUCTOR 100uH	
L516	1-410-466-41	INDUCTOR 4.7uH	
L517	1-408-429-00	INDUCTOR 470uH	
L518	1-408-411-00	INDUCTOR 15uH	
L522	1-408-413-00	INDUCTOR 22uH	
L523	1-410-476-11	INDUCTOR 33uH	
L524	1-408-413-00	INDUCTOR 22uH	
L526	1-410-482-31	INDUCTOR 100uH	
L527	1-410-476-11	INDUCTOR 33uH	
L528	1-410-478-11	INDUCTOR 47uH	
L529	1-410-476-11	INDUCTOR 33uH	
L530	1-408-422-00	INDUCTOR 120uH	
L531	1-408-406-00	INDUCTOR 5.6uH	
L532	1-410-470-11	INDUCTOR 10uH	
L533	1-410-476-11	INDUCTOR 33uH	
L534	1-410-468-11	INDUCTOR 6.8uH	

Ref. No.	Part No.	Description	Remarks
L535	1-410-462-11	INDUCTOR 2.2uH	
L536	1-410-476-11	INDUCTOR 33uH	
L537	1-410-470-11	INDUCTOR 10uH	
L539	1-410-478-11	INDUCTOR 47uH	
L540	1-410-476-11	INDUCTOR 33uH	
L542	1-410-476-11	INDUCTOR 33uH	
L543	1-412-955-11	INDUCTOR 22uH	
L544	1-410-476-11	INDUCTOR 33uH	
L545	1-412-951-11	INDUCTOR 10uH	
L801	1-424-522-21	COIL, CHOKE 10uH	
L802	1-410-478-11	INDUCTOR 47uH	
		< IC LINK >	
⚠PS804	1-532-685-00	LINK, IC	
		< TRANSISTOR >	
Q002	8-729-421-19	TRANSISTOR UN2213	
Q005	8-729-010-25	TRANSISTOR MSD601-RT1	
Q006	8-729-010-25	TRANSISTOR MSD601-RT1	
Q007	8-729-421-19	TRANSISTOR UN2213	
Q008	8-729-421-19	TRANSISTOR UN2213	
Q010	8-729-010-05	TRANSISTOR MSB709-RT1	
Q011	8-729-010-25	TRANSISTOR MSD601-RT1	
Q012	8-729-421-19	TRANSISTOR UN2213	
Q013	8-729-010-25	TRANSISTOR MSD601-RT1	
Q014	8-729-010-25	TRANSISTOR MSD601-RT1	
Q015	8-729-424-08	TRANSISTOR UN2111	
Q016	8-729-010-25	TRANSISTOR MSD601-RT1	
Q017	8-729-421-19	TRANSISTOR UN2213	
Q018	8-729-424-08	TRANSISTOR UN2111	
Q101	8-729-230-49	TRANSISTOR 2SC2712-YG	
Q102	8-729-424-18	TRANSISTOR UN2113	
Q103	8-729-424-18	TRANSISTOR UN2113	
Q104	8-729-424-18	TRANSISTOR UN2113	
Q106	8-729-010-29	TRANSISTOR MSD601-RST1	
Q107	8-729-402-19	TRANSISTOR XN6501	
Q201	8-729-424-18	TRANSISTOR UN2113	
Q202	8-729-028-70	TRANSISTOR UN2225T-(TX)	
Q203	8-729-028-70	TRANSISTOR UN2225T-(TX)	
Q207	8-729-421-19	TRANSISTOR UN2213	
Q208	8-729-010-05	TRANSISTOR MSB709-RT1	
Q209	8-729-010-05	TRANSISTOR MSB709-RT1	
Q210	8-729-424-18	TRANSISTOR UN2113	
Q211	8-729-424-08	TRANSISTOR UN2111	
Q220	8-729-010-25	TRANSISTOR MSD601-RT1	
Q221	8-729-421-19	TRANSISTOR UN2213	
Q222	8-729-421-19	TRANSISTOR UN2213	
Q223	8-729-421-19	TRANSISTOR UN2213	
Q224	8-729-424-45	TRANSISTOR UN211D-TX	
Q225	8-729-900-51	TRANSISTOR DTA114TK	
Q226	8-729-424-18	TRANSISTOR UN2113	
Q227	8-729-421-19	TRANSISTOR UN2213	
Q228	8-729-421-19	TRANSISTOR UN2213	
Q301	8-729-010-05	TRANSISTOR MSB709-RT1	
Q302	8-729-010-05	TRANSISTOR MSB709-RT1	
Q303	8-729-402-19	TRANSISTOR XN6501	

Note : The components identified by mark ⚠ or dotted line with mark ⚠ are critical for safety. Replace only with part number specified.

Ref. No.	Part No.	Description	Remarks
Q305	8-729-402-19	TRANSISTOR XN6501	
Q327	8-729-010-25	TRANSISTOR MSD601-RT1	
Q328	8-729-010-05	TRANSISTOR MSB709-RT1	
Q410	8-729-421-19	TRANSISTOR UN2213	
Q411	8-729-424-76	TRANSISTOR UN2210-TX	
Q501	8-729-010-25	TRANSISTOR MSD601-RT1	
Q502	8-729-230-49	TRANSISTOR 2SC2712-YG	
Q503	8-729-424-32	TRANSISTOR UN2117	
Q504	8-729-230-49	TRANSISTOR 2SC2712-YG	
Q505	8-729-421-19	TRANSISTOR UN2213	
Q506	8-729-421-90	TRANSISTOR XN4113	
Q507	8-729-010-05	TRANSISTOR MSB709-RT1	
Q508	8-729-010-25	TRANSISTOR MSD601-RT1	
Q509	8-729-424-70	TRANSISTOR UN2217	
Q511	8-729-420-12	TRANSISTOR XN4213	
Q512	8-729-230-49	TRANSISTOR 2SC2712-YG	
Q513	8-729-010-25	TRANSISTOR MSD601-RT1	
Q514	8-729-010-25	TRANSISTOR MSD601-RT1	
Q516	8-729-420-12	TRANSISTOR XN4213	
Q517	8-729-230-49	TRANSISTOR 2SC2712-YG	
Q518	8-729-010-05	TRANSISTOR MSB709-RT1	
Q519	8-729-010-25	TRANSISTOR MSD601-RT1	
Q520	8-729-010-25	TRANSISTOR MSD601-RT1	
Q521	8-729-421-19	TRANSISTOR UN2213	
Q522	8-729-421-19	TRANSISTOR UN2213	
Q523	8-729-421-19	TRANSISTOR UN2213	
Q524	8-729-420-10	TRANSISTOR XN4115	
Q525	8-729-420-12	TRANSISTOR XN4213	
Q526	8-729-420-10	TRANSISTOR XN4115	
Q527	8-729-422-54	TRANSISTOR XN4215	
Q528	8-729-420-12	TRANSISTOR XN4213	
Q530	8-729-010-25	TRANSISTOR MSD601-RT1	
Q532	8-729-421-19	TRANSISTOR UN2213	
Q533	8-729-010-25	TRANSISTOR MSD601-RT1	
Q534	8-729-422-54	TRANSISTOR XN4215	
Q535	8-729-010-25	TRANSISTOR MSD601-RT1	
Q536	8-729-010-05	TRANSISTOR MSB709-RT1	
Q537	8-729-424-18	TRANSISTOR UN2113	
Q538	8-729-420-12	TRANSISTOR XN4213	
Q539	8-729-010-05	TRANSISTOR MSB709-RT1	
Q540	8-729-420-12	TRANSISTOR XN4213	
Q541	8-729-010-25	TRANSISTOR MSD601-RT1	
Q542	8-729-421-19	TRANSISTOR UN2213	
Q543	8-729-010-05	TRANSISTOR MSB709-RT1	
Q544	8-729-010-25	TRANSISTOR MSD601-RT1	
Q545	8-729-420-12	TRANSISTOR XN4213	
Q546	8-729-424-32	TRANSISTOR UN2117	
Q547	8-729-010-05	TRANSISTOR MSB709-RT1	
Q548	8-729-010-25	TRANSISTOR MSD601-RT1	
Q549	8-729-424-70	TRANSISTOR UN2217	
Q550	8-729-010-25	TRANSISTOR MSD601-RT1	
Q552	8-729-420-12	TRANSISTOR XN4213	
Q554	8-729-230-49	TRANSISTOR 2SC2712-YG	
Q555	8-729-424-70	TRANSISTOR UN2217	
Q556	8-729-010-25	TRANSISTOR MSD601-RT1	
Q557	8-729-010-25	TRANSISTOR MSD601-RT1	
Q558	8-729-010-25	TRANSISTOR MSD601-RT1	
Q559	8-729-230-49	TRANSISTOR 2SC2712-YG	
Q560	8-729-010-05	TRANSISTOR MSB709-RT1	
Q561	8-729-010-05	TRANSISTOR MSB709-RT1	
Q562	8-729-424-18	TRANSISTOR UN2113	
Q563	8-729-010-25	TRANSISTOR MSD601-RT1	
Q564	8-729-010-05	TRANSISTOR MSB709-RT1	
Q565	8-729-230-49	TRANSISTOR 2SC2712-YG	
Q567	8-729-010-25	TRANSISTOR MSD601-RT1	
Q569	8-729-010-25	TRANSISTOR MSD601-RT1	
Q570	8-729-424-18	TRANSISTOR UN2113	
Q571	8-729-421-19	TRANSISTOR UN2213	
Q572	8-729-010-25	TRANSISTOR MSD601-RT1	
Q573	8-729-010-05	TRANSISTOR MSB709-RT1	
Q574	8-729-010-05	TRANSISTOR MSB709-RT1	
Q575	8-729-010-05	TRANSISTOR MSB709-RT1	
Q576	8-729-010-05	TRANSISTOR MSB709-RT1	
Q577	8-729-010-25	TRANSISTOR MSD601-RT1	
Q578	8-729-010-25	TRANSISTOR MSD601-RT1	
Q579	8-729-010-25	TRANSISTOR MSD601-RT1	
Q801	8-729-231-60	TRANSISTOR 2SD1406-YGR	

< RESISTOR >

R002	1-216-061-00	METAL CHIP	3.3K	5%	1/10W
R003	1-216-085-00	METAL CHIP	33K	5%	1/10W
R004	1-216-093-00	METAL CHIP	68K	5%	1/10W
R005	1-216-295-00	METAL CHIP	0	5%	1/10W
R006	1-216-085-00	METAL CHIP	33K	5%	1/10W
R007	1-216-093-00	METAL CHIP	68K	5%	1/10W
R008	1-216-073-00	METAL CHIP	10K	5%	1/10W
R009	1-216-041-00	METAL CHIP	470	5%	1/10W
R010	1-216-049-00	METAL CHIP	1K	5%	1/10W
R011	1-216-049-00	METAL CHIP	1K	5%	1/10W
R012	1-216-049-00	METAL CHIP	1K	5%	1/10W
R013	1-216-295-00	METAL CHIP	0	5%	1/10W
R014	1-216-295-00	METAL CHIP	0	5%	1/10W
R015	1-216-295-00	METAL CHIP	0	5%	1/10W
R016	1-216-295-00	METAL CHIP	0	5%	1/10W
R017	1-216-049-00	METAL CHIP	1K	5%	1/10W
R018	1-216-049-00	METAL CHIP	1K	5%	1/10W
R019	1-216-065-00	METAL CHIP	4.7K	5%	1/10W
R020	1-216-049-00	METAL CHIP	1K	5%	1/10W
R021	1-216-049-00	METAL CHIP	1K	5%	1/10W
R022	1-216-089-91	METAL GLAZE	47K	5%	1/10W
R023	1-216-073-00	METAL CHIP	10K	5%	1/10W
R024	1-216-295-00	METAL CHIP	0	5%	1/10W
R025	1-216-089-91	METAL GLAZE	47K	5%	1/10W
R026	1-216-041-00	METAL CHIP	470	5%	1/10W
R027	1-216-295-00	METAL CHIP	0	5%	1/10W
R029	1-216-073-00	METAL CHIP	10K	5%	1/10W
R030	1-216-049-00	METAL CHIP	1K	5%	1/10W
R031	1-216-049-00	METAL CHIP	1K	5%	1/10W
R032	1-216-295-00	METAL CHIP	0	5%	1/10W
R033	1-216-049-00	METAL CHIP	1K	5%	1/10W
R034	1-216-295-00	METAL CHIP	0	5%	1/10W
R035	1-216-049-00	METAL CHIP	1K	5%	1/10W
R036	1-216-049-00	METAL CHIP	1K	5%	1/10W
R037	1-216-049-00	METAL CHIP	1K	5%	1/10W
R038	1-216-049-00	METAL CHIP	1K	5%	1/10W
R039	1-216-295-00	METAL CHIP	0	5%	1/10W
R040	1-216-061-00	METAL CHIP	3.3K	5%	1/10W
R041	1-216-073-00	METAL CHIP	10K	5%	1/10W
R042	1-216-049-00	METAL CHIP	1K	5%	1/10W

MH-18

Ref. No.	Part No.	Description			Remarks
R044	1-216-089-91	METAL GLAZE	47K	5%	1/10W
R045	1-216-295-00	METAL CHIP	0	5%	1/10W
R047	1-216-089-91	METAL GLAZE	47K	5%	1/10W
R048	1-216-295-00	METAL CHIP	0	5%	1/10W
R049	1-216-049-00	METAL CHIP	1K	5%	1/10W
R050	1-216-089-91	METAL GLAZE	47K	5%	1/10W
R051	1-216-295-00	METAL CHIP	0	5%	1/10W
R053	1-216-089-91	METAL GLAZE	47K	5%	1/10W
R056	1-216-089-91	METAL GLAZE	47K	5%	1/10W
R059	1-216-089-91	METAL GLAZE	47K	5%	1/10W
R061	1-216-295-00	METAL CHIP	0	5%	1/10W
R062	1-216-089-91	METAL GLAZE	47K	5%	1/10W
R066	1-216-089-91	METAL GLAZE	47K	5%	1/10W
R069	1-216-089-91	METAL GLAZE	47K	5%	1/10W
R070	1-216-049-00	METAL CHIP	1K	5%	1/10W
R072	1-216-089-91	METAL GLAZE	47K	5%	1/10W
R074	1-216-295-00	METAL CHIP	0	5%	1/10W
R075	1-216-089-91	METAL GLAZE	47K	5%	1/10W
R076	1-216-295-00	METAL CHIP	0	5%	1/10W
R078	1-216-089-91	METAL GLAZE	47K	5%	1/10W
R082	1-216-049-00	METAL CHIP	1K	5%	1/10W
R083	1-216-049-00	METAL CHIP	1K	5%	1/10W
R084	1-216-049-00	METAL CHIP	1K	5%	1/10W
R090	1-216-049-00	METAL CHIP	1K	5%	1/10W
R101	1-208-770-11	METAL GLAZE	330	0.50%	1/10W
R102	1-208-760-11	METAL GLAZE	120	0.50%	1/10W
R103	1-208-780-11	METAL GLAZE	820	0.50%	1/10W
R104	1-216-047-91	METAL GLAZE	820	5%	1/10W
R105	1-216-051-00	METAL CHIP	1.2K	5%	1/10W
R106	1-208-796-11	METAL GLAZE	3.9K	0.50%	1/10W
R107	1-216-049-00	METAL CHIP	1K	5%	1/10W
R108	1-216-079-00	METAL CHIP	18K	5%	1/10W
R109	1-208-780-11	METAL GLAZE	820	0.50%	1/10W
R110	1-216-041-00	METAL CHIP	470	5%	1/10W
R111	1-208-772-11	METAL GLAZE	390	0.50%	1/10W
R112	1-216-073-00	METAL CHIP	10K	5%	1/10W
R113	1-208-752-11	METAL GLAZE	56	0.50%	1/10W
R114	1-216-295-00	METAL CHIP	0	5%	1/10W
R115	1-216-077-00	METAL CHIP	15K	5%	1/10W
R116	1-216-045-00	METAL CHIP	680	5%	1/10W
R117	1-216-037-00	METAL CHIP	330	5%	1/10W
R126	1-216-057-00	METAL CHIP	2.2K	5%	1/10W
R127	1-216-077-00	METAL CHIP	15K	5%	1/10W
R128	1-216-057-00	METAL CHIP	2.2K	5%	1/10W
R129	1-216-079-00	METAL CHIP	18K	5%	1/10W
R130	1-216-049-00	METAL CHIP	1K	5%	1/10W
R201	1-216-049-00	METAL CHIP	1K	5%	1/10W
R202	1-216-049-00	METAL CHIP	1K	5%	1/10W
R203	1-216-089-91	METAL GLAZE	47K	5%	1/10W
R204	1-216-089-91	METAL GLAZE	47K	5%	1/10W
R205	1-216-097-00	METAL CHIP	100K	5%	1/10W
R206	1-216-061-00	METAL CHIP	3.3K	5%	1/10W
R207	1-216-121-91	METAL GLAZE	1M	5%	1/10W
R208	1-216-065-00	METAL CHIP	4.7K	5%	1/10W
R209	1-216-097-00	METAL CHIP	100K	5%	1/10W
R210	1-216-061-00	METAL CHIP	3.3K	5%	1/10W
R212	1-216-033-00	METAL CHIP	220	5%	1/10W
R213	1-216-105-91	METAL GLAZE	220K	5%	1/10W
R214	1-216-075-00	METAL CHIP	12K	5%	1/10W
R215	1-216-295-00	METAL CHIP	0	5%	1/10W

Ref. No.	Part No.	Description			Remarks
R217	1-216-067-00	METAL CHIP	5.6K	5%	1/10W
R218	1-216-689-11	METAL CHIP	39K	0.5%	1/10W
R219	1-216-097-00	METAL CHIP	100K	5%	1/10W
R220	1-216-049-00	METAL CHIP	1K	5%	1/10W
R221	1-208-808-11	METAL GLAZE	12K	0.50%	1/10W
R223	1-216-049-00	METAL CHIP	1K	5%	1/10W
R225	1-216-073-00	METAL CHIP	10K	5%	1/10W
R226	1-216-089-91	METAL GLAZE	47K	5%	1/10W
R227	1-216-067-00	METAL CHIP	5.6K	5%	1/10W
R228	1-216-105-91	METAL GLAZE	220K	5%	1/10W
R229	1-216-075-00	METAL CHIP	12K	5%	1/10W
R230	1-216-055-00	METAL CHIP	1.8K	5%	1/10W
R231	1-216-025-00	METAL CHIP	100	5%	1/10W
R232	1-216-049-00	METAL CHIP	1K	5%	1/10W
R233	1-216-043-91	METAL GLAZE	560	5%	1/10W
R234	1-216-046-00	METAL CHIP	750	5%	1/10W
R235	1-216-059-00	METAL CHIP	2.7K	5%	1/10W
R236	1-216-073-00	METAL CHIP	10K	5%	1/10W
R237	1-216-061-00	METAL CHIP	3.3K	5%	1/10W
R238	1-216-061-00	METAL CHIP	3.3K	5%	1/10W
R239	1-216-089-91	METAL GLAZE	47K	5%	1/10W
R262	1-216-073-00	METAL CHIP	10K	5%	1/10W
R263	1-216-097-00	METAL CHIP	100K	5%	1/10W
R264	1-216-073-00	METAL CHIP	10K	5%	1/10W
R265	1-216-073-00	METAL CHIP	10K	5%	1/10W
R266	1-216-073-00	METAL CHIP	10K	5%	1/10W
R267	1-216-057-00	METAL CHIP	2.2K	5%	1/10W
R268	1-216-073-00	METAL CHIP	10K	5%	1/10W
R269	1-216-689-11	METAL CHIP	39K	0.5%	1/10W
R301	1-216-057-00	METAL CHIP	2.2K	5%	1/10W
R302	1-216-057-00	METAL CHIP	2.2K	5%	1/10W
R303	1-216-025-00	METAL CHIP	100	5%	1/10W
R304	1-216-085-00	METAL CHIP	33K	5%	1/10W
R305	1-216-081-00	METAL CHIP	22K	5%	1/10W
R312	1-216-025-00	METAL CHIP	100	5%	1/10W
R313	1-216-081-00	METAL CHIP	22K	5%	1/10W
R314	1-216-049-00	METAL CHIP	1K	5%	1/10W
R320	1-216-057-00	METAL CHIP	2.2K	5%	1/10W
R377	1-216-081-00	METAL CHIP	22K	5%	1/10W
R384	1-216-081-00	METAL CHIP	22K	5%	1/10W
R387	1-216-053-00	METAL CHIP	1.5K	5%	1/10W
R388	1-216-063-91	METAL GLAZE	3.9K	5%	1/10W
R389	1-216-059-00	METAL CHIP	2.7K	5%	1/10W
R393	1-216-065-00	METAL CHIP	4.7K	5%	1/10W
R394	1-216-121-91	METAL GLAZE	1M	5%	1/10W
R395	1-216-053-00	METAL CHIP	1.5K	5%	1/10W
R401	1-216-295-00	METAL CHIP	0	5%	1/10W
R404	1-216-085-00	METAL CHIP	33K	5%	1/10W
R409	1-216-295-00	METAL CHIP	0	5%	1/10W
R501	1-216-041-00	METAL CHIP	470	5%	1/10W
R502	1-216-049-00	METAL CHIP	1K	5%	1/10W
R503	1-216-049-00	METAL CHIP	1K	5%	1/10W
R504	1-216-089-91	METAL GLAZE	47K	5%	1/10W
R505	1-216-073-00	METAL CHIP	10K	5%	1/10W
R506	1-216-077-00	METAL CHIP	15K	5%	1/10W
R507	1-216-061-00	METAL CHIP	3.3K	5%	1/10W
R508	1-216-043-91	METAL GLAZE	560	5%	1/10W
R509	1-216-049-00	METAL CHIP	1K	5%	1/10W
R510	1-216-047-91	METAL GLAZE	820	5%	1/10W
R511	1-216-059-00	METAL CHIP	2.7K	5%	1/10W

Ref. No.	Part No.	Description			Remarks
R512	1-216-039-00	METAL CHIP	390	5%	1/10W
R513	1-216-027-00	METAL CHIP	120	5%	1/10W
R514	1-216-047-91	METAL GLAZE	820	5%	1/10W
R515	1-216-085-00	METAL CHIP	33K	5%	1/10W
R516	1-216-075-00	METAL CHIP	12K	5%	1/10W
R517	1-216-041-00	METAL CHIP	470	5%	1/10W
R518	1-216-041-00	METAL CHIP	470	5%	1/10W
R519	1-216-063-91	METAL GLAZE	3.9K	5%	1/10W
R520	1-216-043-91	METAL GLAZE	560	5%	1/10W
R521	1-216-037-00	METAL CHIP	330	5%	1/10W
R522	1-216-025-00	METAL CHIP	100	5%	1/10W
R523	1-216-033-00	METAL CHIP	220	5%	1/10W
R524	1-216-041-00	METAL CHIP	470	5%	1/10W
R525	1-216-045-00	METAL CHIP	680	5%	1/10W
R526	1-216-043-91	METAL GLAZE	560	5%	1/10W
R527	1-216-073-00	METAL CHIP	10K	5%	1/10W
R529	1-216-073-00	METAL CHIP	10K	5%	1/10W
R530	1-216-043-91	METAL GLAZE	560	5%	1/10W
R531	1-216-049-00	METAL CHIP	1K	5%	1/10W
R532	1-216-049-00	METAL CHIP	1K	5%	1/10W
R533	1-216-049-00	METAL CHIP	1K	5%	1/10W
R535	1-208-772-11	METAL GLAZE	390	0.50%	1/10W
R536	1-216-045-00	METAL CHIP	680	5%	1/10W
R537	1-216-065-00	METAL CHIP	4.7K	5%	1/10W
R538	1-216-045-00	METAL CHIP	680	5%	1/10W
R539	1-216-059-00	METAL CHIP	2.7K	5%	1/10W
R540	1-216-077-00	METAL CHIP	15K	5%	1/10W
R541	1-216-085-00	METAL CHIP	33K	5%	1/10W
R542	1-216-041-00	METAL CHIP	470	5%	1/10W
R543	1-216-033-00	METAL CHIP	220	5%	1/10W
R544	1-216-065-00	METAL CHIP	4.7K	5%	1/10W
R545	1-216-045-00	METAL CHIP	680	5%	1/10W
R546	1-216-037-00	METAL CHIP	330	5%	1/10W
R547	1-216-041-00	METAL CHIP	470	5%	1/10W
R548	1-216-043-91	METAL GLAZE	560	5%	1/10W
R549	1-216-060-00	METAL GLAZE	3K	5%	1/10W
R550	1-216-041-00	METAL CHIP	470	5%	1/10W
R551	1-216-077-00	METAL CHIP	15K	5%	1/10W
R552	1-216-073-00	METAL CHIP	10K	5%	1/10W
R553	1-216-057-00	METAL CHIP	2.2K	5%	1/10W
R554	1-216-295-00	METAL CHIP	0	5%	1/10W
R555	1-216-041-00	METAL CHIP	470	5%	1/10W
R556	1-216-061-00	METAL CHIP	3.3K	5%	1/10W
R557	1-216-083-00	METAL CHIP	27K	5%	1/10W
R558	1-216-077-00	METAL CHIP	15K	5%	1/10W
R559	1-216-045-00	METAL CHIP	680	5%	1/10W
R560	1-216-041-00	METAL CHIP	470	5%	1/10W
R561	1-216-049-00	METAL CHIP	1K	5%	1/10W
R562	1-216-057-00	METAL CHIP	2.2K	5%	1/10W
R563	1-216-049-00	METAL CHIP	1K	5%	1/10W
R564	1-216-049-00	METAL CHIP	1K	5%	1/10W
R565	1-216-049-00	METAL CHIP	1K	5%	1/10W
R568	1-216-049-00	METAL CHIP	1K	5%	1/10W
R569	1-216-049-00	METAL CHIP	1K	5%	1/10W
R571	1-216-049-00	METAL CHIP	1K	5%	1/10W
R572	1-216-049-00	METAL CHIP	1K	5%	1/10W
R573	1-216-057-00	METAL CHIP	2.2K	5%	1/10W
R574	1-216-295-00	METAL CHIP	0	5%	1/10W
R576	1-216-049-00	METAL CHIP	1K	5%	1/10W
R577	1-216-073-00	METAL CHIP	10K	5%	1/10W

Ref. No.	Part No.	Description			Remarks
R578	1-216-081-00	METAL CHIP	22K	5%	1/10W
R579	1-216-049-00	METAL CHIP	1K	5%	1/10W
R580	1-216-049-00	METAL CHIP	1K	5%	1/10W
R581	1-216-295-00	METAL CHIP	0	5%	1/10W
R582	1-216-057-00	METAL CHIP	2.2K	5%	1/10W
R584	1-216-073-00	METAL CHIP	10K	5%	1/10W
R585	1-216-055-00	METAL CHIP	1.8K	5%	1/10W
R586	1-216-057-00	METAL CHIP	2.2K	5%	1/10W
R587	1-216-073-00	METAL CHIP	10K	5%	1/10W
R588	1-216-063-91	METAL GLAZE	3.9K	5%	1/10W
R589	1-216-057-00	METAL CHIP	2.2K	5%	1/10W
R590	1-216-073-00	METAL CHIP	10K	5%	1/10W
R591	1-216-081-00	METAL CHIP	22K	5%	1/10W
R592	1-216-067-00	METAL CHIP	5.6K	5%	1/10W
R593	1-216-057-00	METAL CHIP	2.2K	5%	1/10W
R594	1-216-057-00	METAL CHIP	2.2K	5%	1/10W
R595	1-216-105-91	METAL GLAZE	220K	5%	1/10W
R596	1-208-812-11	METAL GLAZE	18K	0.50%	1/10W
R597	1-216-092-00	METAL GLAZE	62K	5%	1/10W
R598	1-208-816-11	METAL GLAZE	27K	0.50%	1/10W
R599	1-208-812-11	METAL GLAZE	18K	0.50%	1/10W
R600	1-216-073-00	METAL CHIP	10K	5%	1/10W
R601	1-216-057-00	METAL CHIP	2.2K	5%	1/10W
R602	1-216-033-00	METAL CHIP	220	5%	1/10W
R603	1-216-061-00	METAL CHIP	3.3K	5%	1/10W
R604	1-216-295-00	METAL CHIP	0	5%	1/10W
R606	1-216-089-91	METAL GLAZE	47K	5%	1/10W
R608	1-216-049-00	METAL CHIP	1K	5%	1/10W
R610	1-216-073-00	METAL CHIP	10K	5%	1/10W
R611	1-216-079-00	METAL CHIP	18K	5%	1/10W
R612	1-216-081-00	METAL CHIP	22K	5%	1/10W
R613	1-216-075-00	METAL CHIP	12K	5%	1/10W
R614	1-216-065-00	METAL CHIP	4.7K	5%	1/10W
R615	1-208-794-11	METAL GLAZE	3.3K	0.50%	1/10W
R616	1-208-784-11	METAL GLAZE	1.2K	0.50%	1/10W
R618	1-216-049-00	METAL CHIP	1K	5%	1/10W
R619	1-216-083-00	METAL CHIP	27K	5%	1/10W
R620	1-216-075-00	METAL CHIP	12K	5%	1/10W
R621	1-208-772-11	METAL GLAZE	390	0.50%	1/10W
R622	1-216-063-91	METAL GLAZE	3.9K	5%	1/10W
R623	1-216-057-00	METAL CHIP	2.2K	5%	1/10W
R624	1-216-044-00	METAL CHIP	620	5%	1/10W
R625	1-216-035-00	METAL CHIP	270	5%	1/10W
R626	1-216-049-00	METAL CHIP	1K	5%	1/10W
R627	1-208-774-11	METAL GLAZE	470	0.50%	1/10W
R628	1-216-295-00	METAL CHIP	0	5%	1/10W
R629	1-216-049-00	METAL CHIP	1K	5%	1/10W
R630	1-216-041-00	METAL CHIP	470	5%	1/10W
R631	1-216-043-91	METAL GLAZE	560	5%	1/10W
R632	1-216-041-00	METAL CHIP	470	5%	1/10W
R633	1-216-041-00	METAL CHIP	470	5%	1/10W
R635	1-216-295-00	METAL CHIP	0	5%	1/10W
R636	1-216-035-00	METAL CHIP	270	5%	1/10W
R637	1-216-061-00	METAL CHIP	3.3K	5%	1/10W
R638	1-216-059-00	METAL CHIP	2.7K	5%	1/10W
R639	1-216-035-00	METAL CHIP	270	5%	1/10W
R640	1-216-053-00	METAL CHIP	1.5K	5%	1/10W
R641	1-216-041-00	METAL CHIP	470	5%	1/10W
R642	1-216-295-00	METAL CHIP	0	5%	1/10W
R643	1-216-039-00	METAL CHIP	390	5%	1/10W

MH-18

Ref. No.	Part No.	Description			Remarks
R644	1-216-121-91	METAL GLAZE	1M	5%	1/10W
R645	1-216-031-00	METAL CHIP	180	5%	1/10W
R646	1-216-085-00	METAL CHIP	33K	5%	1/10W
R647	1-216-091-00	METAL CHIP	56K	5%	1/10W
R648	1-216-041-00	METAL CHIP	470	5%	1/10W
R649	1-216-049-00	METAL CHIP	1K	5%	1/10W
R650	1-216-295-00	METAL CHIP	0	5%	1/10W
R651	1-216-027-00	METAL CHIP	120	5%	1/10W
R652	1-216-095-00	METAL CHIP	82K	5%	1/10W
R653	1-216-049-00	METAL CHIP	1K	5%	1/10W
R654	1-216-041-00	METAL CHIP	470	5%	1/10W
R655	1-216-041-00	METAL CHIP	470	5%	1/10W
R656	1-216-049-00	METAL CHIP	1K	5%	1/10W
R657	1-216-029-00	METAL CHIP	150	5%	1/10W
R659	1-216-041-00	METAL CHIP	470	5%	1/10W
R660	1-216-049-00	METAL CHIP	1K	5%	1/10W
R661	1-216-035-00	METAL CHIP	270	5%	1/10W
R662	1-216-039-00	METAL CHIP	390	5%	1/10W
R663	1-216-039-00	METAL CHIP	390	5%	1/10W
R664	1-216-041-00	METAL CHIP	470	5%	1/10W
R665	1-216-057-00	METAL CHIP	2.2K	5%	1/10W
R666	1-216-057-00	METAL CHIP	2.2K	5%	1/10W
R667	1-216-069-00	METAL CHIP	6.8K	5%	1/10W
R669	1-216-041-00	METAL CHIP	470	5%	1/10W
R670	1-216-041-00	METAL CHIP	470	5%	1/10W
R671	1-216-295-00	METAL CHIP	0	5%	1/10W
R672	1-216-061-00	METAL CHIP	3.3K	5%	1/10W
R674	1-216-081-00	METAL CHIP	22K	5%	1/10W
R675	1-216-089-91	METAL GLAZE	47K	5%	1/10W
R677	1-216-035-00	METAL CHIP	270	5%	1/10W
R678	1-216-033-00	METAL CHIP	220	5%	1/10W
R679	1-216-295-00	METAL CHIP	0	5%	1/10W
R680	1-216-057-00	METAL CHIP	2.2K	5%	1/10W
R681	1-216-121-91	METAL GLAZE	1M	5%	1/10W
R682	1-216-019-00	METAL CHIP	56	5%	1/10W
R683	1-216-041-00	METAL CHIP	470	5%	1/10W
R684	1-216-045-00	METAL CHIP	680	5%	1/10W
R686	1-216-081-00	METAL CHIP	22K	5%	1/10W
R687	1-216-073-00	METAL CHIP	10K	5%	1/10W
R688	1-216-295-00	METAL CHIP	0	5%	1/10W
R689	1-216-043-91	METAL GLAZE	560	5%	1/10W
R690	1-216-057-00	METAL CHIP	2.2K	5%	1/10W
R691	1-216-073-00	METAL CHIP	10K	5%	1/10W
R693	1-216-027-00	METAL CHIP	120	5%	1/10W
R694	1-216-095-00	METAL CHIP	82K	5%	1/10W
R695	1-216-073-00	METAL CHIP	10K	5%	1/10W
R696	1-216-085-00	METAL CHIP	33K	5%	1/10W
R697	1-216-091-00	METAL CHIP	56K	5%	1/10W
R698	1-216-047-91	METAL GLAZE	820	5%	1/10W
R699	1-216-053-00	METAL CHIP	1.5K	5%	1/10W
R700	1-216-057-00	METAL CHIP	2.2K	5%	1/10W
R701	1-216-041-00	METAL CHIP	470	5%	1/10W
R702	1-216-049-00	METAL CHIP	1K	5%	1/10W
R704	1-216-059-00	METAL CHIP	2.7K	5%	1/10W
R705	1-216-045-00	METAL CHIP	680	5%	1/10W
R706	1-216-044-00	METAL CHIP	620	5%	1/10W
R707	1-216-057-00	METAL CHIP	2.2K	5%	1/10W
R708	1-216-033-00	METAL CHIP	220	5%	1/10W
R709	1-216-039-00	METAL CHIP	390	5%	1/10W
R710	1-216-061-00	METAL CHIP	3.3K	5%	1/10W
R711	1-216-059-00	METAL CHIP	2.7K	5%	1/10W
R712	1-216-057-00	METAL CHIP	2.2K	5%	1/10W
R713	1-216-057-00	METAL CHIP	2.2K	5%	1/10W
R714	1-216-089-91	METAL GLAZE	47K	5%	1/10W
R715	1-216-073-00	METAL CHIP	10K	5%	1/10W
R716	1-216-073-00	METAL CHIP	10K	5%	1/10W
R717	1-216-057-00	METAL CHIP	2.2K	5%	1/10W
R720	1-216-049-00	METAL CHIP	1K	5%	1/10W
R721	1-216-049-00	METAL CHIP	1K	5%	1/10W
R722	1-216-073-00	METAL CHIP	10K	5%	1/10W
R723	1-216-073-00	METAL CHIP	10K	5%	1/10W
R724	1-216-035-00	METAL CHIP	270	5%	1/10W
R725	1-216-295-00	METAL CHIP	0	5%	1/10W
R726	1-216-295-00	METAL CHIP	0	5%	1/10W
R731	1-216-041-00	METAL CHIP	470	5%	1/10W
R732	1-216-041-00	METAL CHIP	470	5%	1/10W
R733	1-216-049-00	METAL CHIP	1K	5%	1/10W
R734	1-216-049-00	METAL CHIP	1K	5%	1/10W
R735	1-216-073-00	METAL CHIP	10K	5%	1/10W
R736	1-216-069-00	METAL CHIP	6.8K	5%	1/10W
R737	1-216-073-00	METAL CHIP	10K	5%	1/10W
R738	1-216-049-00	METAL CHIP	1K	5%	1/10W
R742	1-216-017-91	METAL GLAZE	47	5%	1/10W
R743	1-216-295-00	METAL CHIP	0	5%	1/10W
R744	1-216-041-00	METAL CHIP	470	5%	1/10W
R745	1-216-073-00	METAL CHIP	10K	5%	1/10W
R747	1-216-295-00	METAL CHIP	0	5%	1/10W
R748	1-216-045-00	METAL CHIP	680	5%	1/10W
R801	1-216-089-91	METAL GLAZE	47K	5%	1/10W
R802	1-216-073-00	METAL CHIP	10K	5%	1/10W
R803	1-216-073-00	METAL CHIP	10K	5%	1/10W
R805	1-217-671-11	METAL CHIP	1	5%	1/10W
R806	1-216-295-00	METAL CHIP	0	5%	1/10W
R807	1-217-671-11	METAL CHIP	1	5%	1/10W
R808	1-217-671-11	METAL CHIP	1	5%	1/10W
R809	1-216-019-00	METAL CHIP	56	5%	1/10W
R810	1-216-121-91	METAL GLAZE	1M	5%	1/10W
R811	1-216-041-00	METAL CHIP	470	5%	1/10W
R813	1-216-081-00	METAL CHIP	22K	5%	1/10W
R815	1-216-073-00	METAL CHIP	10K	5%	1/10W
R816	1-216-101-00	METAL CHIP	150K	5%	1/10W
R817	1-216-101-00	METAL CHIP	150K	5%	1/10W
R818	1-216-108-00	METAL GLAZE	300K	5%	1/10W
R820	1-219-107-91	METAL GLAZE	1.5	5%	1/8W
R821	1-219-107-91	METAL GLAZE	1.5	5%	1/8W
R822	1-219-107-91	METAL GLAZE	1.5	5%	1/8W
R823	1-216-097-00	METAL CHIP	100K	5%	1/10W
R824	1-216-089-91	METAL GLAZE	47K	5%	1/10W
R825	1-216-089-91	METAL GLAZE	47K	5%	1/10W
R826	1-216-089-91	METAL GLAZE	47K	5%	1/10W
R827	1-216-295-00	METAL CHIP	0	5%	1/10W
R829	1-216-295-00	METAL CHIP	0	5%	1/10W
R830	1-216-019-00	METAL CHIP	56	5%	1/10W
R831	1-216-295-00	METAL CHIP	0	5%	1/10W
R832	1-216-295-00	METAL CHIP	0	5%	1/10W
R840	1-216-049-00	METAL CHIP	1K	5%	1/10W
R841	1-216-121-91	METAL GLAZE	1M	5%	1/10W
R842	1-216-295-00	METAL CHIP	0	5%	1/10W
R844	1-216-295-00	METAL CHIP	0	5%	1/10W
R845	1-216-073-00	METAL CHIP	10K	5%	1/10W

Ref. No.	Part No.	Description			Remarks
R846	1-216-073-00	METAL CHIP	10K	5%	1/10W
R847	1-216-073-00	METAL CHIP	10K	5%	1/10W
R848	1-216-093-00	METAL CHIP	68K	5%	1/10W
R849	1-216-093-00	METAL CHIP	68K	5%	1/10W
R850	1-216-093-00	METAL CHIP	68K	5%	1/10W
R851	1-216-079-00	METAL CHIP	18K	5%	1/10W
R852	1-216-073-00	METAL CHIP	10K	5%	1/10W
R853	1-217-671-11	METAL CHIP	1	5%	1/10W
R854	1-216-295-00	METAL CHIP	0	5%	1/10W
R858	1-216-025-00	METAL CHIP	100	5%	1/10W
R859	1-216-025-00	METAL CHIP	100	5%	1/10W
R901	1-216-073-00	METAL CHIP	10K	5%	1/10W
R902	1-216-172-00	METAL CHIP	82	5%	1/8W
R903	1-216-099-00	METAL CHIP	120K	5%	1/10W
R904	1-216-099-00	METAL CHIP	120K	5%	1/10W
R905	1-216-295-00	METAL CHIP	0	5%	1/10W
R906	1-216-295-00	METAL CHIP	0	5%	1/10W
R907	1-216-295-00	METAL CHIP	0	5%	1/10W
R908	1-216-049-00	METAL CHIP	1K	5%	1/10W
R909	1-216-049-00	METAL CHIP	1K	5%	1/10W
R910	1-216-089-91	METAL GLAZE	47K	5%	1/10W
R911	1-216-089-91	METAL GLAZE	47K	5%	1/10W
R912	1-216-089-91	METAL GLAZE	47K	5%	1/10W
R913	1-216-057-00	METAL CHIP	2.2K	5%	1/10W
R914	1-216-049-00	METAL CHIP	1K	5%	1/10W
R916	1-216-057-00	METAL CHIP	2.2K	5%	1/10W
R917	1-216-057-00	METAL CHIP	2.2K	5%	1/10W
R918	1-216-057-00	METAL CHIP	2.2K	5%	1/10W
R919	1-216-057-00	METAL CHIP	2.2K	5%	1/10W
R920	1-216-073-00	METAL CHIP	10K	5%	1/10W
R921	1-216-089-91	METAL GLAZE	47K	5%	1/10W
R929	1-216-009-00	METAL CHIP	22	5%	1/10W
R932	1-216-113-00	METAL CHIP	470K	5%	1/10W
R933	1-216-033-00	METAL CHIP	220	5%	1/10W
R934	1-216-081-00	METAL CHIP	22K	5%	1/10W
R935	1-216-073-00	METAL CHIP	10K	5%	1/10W
R936	1-216-073-00	METAL CHIP	10K	5%	1/10W
R938	1-216-045-00	METAL CHIP	680	5%	1/10W
R940	1-216-057-00	METAL CHIP	2.2K	5%	1/10W
R941	1-216-085-00	METAL CHIP	33K	5%	1/10W
R942	1-216-049-00	METAL CHIP	1K	5%	1/10W
R944	1-216-089-91	METAL GLAZE	47K	5%	1/10W
R947	1-216-097-00	METAL CHIP	100K	5%	1/10W
R948	1-216-073-00	METAL CHIP	10K	5%	1/10W
R949	1-216-295-00	METAL CHIP	0	5%	1/10W
R954	1-216-075-00	METAL CHIP	12K	5%	1/10W
R955	1-216-073-00	METAL CHIP	10K	5%	1/10W
R956	1-216-081-00	METAL CHIP	22K	5%	1/10W
R957	1-216-121-91	METAL GLAZE	1M	5%	1/10W
R958	1-216-049-00	METAL CHIP	1K	5%	1/10W
R960	1-216-086-00	METAL GLAZE	36K	5%	1/10W
R961	1-216-129-00	METAL CHIP	2.2M	5%	1/10W
R962	1-216-296-00	METAL CHIP	0	5%	1/8W
R963	1-216-073-00	METAL CHIP	10K	5%	1/10W
R964	1-216-001-00	METAL CHIP	10	5%	1/10W
R965	1-216-073-00	METAL CHIP	10K	5%	1/10W
R966	1-216-001-00	METAL CHIP	10	5%	1/10W
R967	1-216-069-00	METAL CHIP	6.8K	5%	1/10W
R968	1-216-073-00	METAL CHIP	10K	5%	1/10W
R969	1-216-121-91	METAL GLAZE	1M	5%	1/10W

Ref. No.	Part No.	Description			Remarks
R970	1-216-074-00	METAL CHIP	11K	5%	1/10W
R971	1-216-097-00	METAL CHIP	100K	5%	1/10W
R972	1-216-069-00	METAL CHIP	6.8K	5%	1/10W
R973	1-216-121-91	METAL GLAZE	1M	5%	1/10W
R976	1-216-037-00	METAL CHIP	330	5%	1/10W
R977	1-208-800-11	METAL GLAZE	5.6K	0.50%	1/10W
R978	1-208-810-11	METAL GLAZE	15K	0.50%	1/10W
R979	1-216-099-00	METAL CHIP	120K	5%	1/10W
R980	1-216-037-00	METAL CHIP	330	5%	1/10W
R981	1-216-105-91	METAL GLAZE	220K	5%	1/10W
R982	1-216-099-00	METAL CHIP	120K	5%	1/10W
R983	1-216-089-91	METAL GLAZE	47K	5%	1/10W
R984	1-216-093-00	METAL CHIP	68K	5%	1/10W
R985	1-216-109-00	METAL CHIP	330K	5%	1/10W
R986	1-216-041-00	METAL CHIP	470	5%	1/10W
R988	1-216-041-00	METAL CHIP	470	5%	1/10W
R989	1-216-069-00	METAL CHIP	6.8K	5%	1/10W
R990	1-216-077-00	METAL CHIP	15K	5%	1/10W
R991	1-216-085-00	METAL CHIP	33K	5%	1/10W
R992	1-216-689-11	METAL CHIP	39K	0.5%	1/10W
R994	1-216-079-00	METAL CHIP	18K	5%	1/10W
R996	1-216-073-00	METAL CHIP	10K	5%	1/10W
R998	1-216-073-00	METAL CHIP	10K	5%	1/10W
R999	1-216-085-00	METAL CHIP	33K	5%	1/10W

< VARIABLE RESISTOR >

RV101	1-223-238-11	RES, ADJ, CARBON 4.7K
RV102	1-223-238-11	RES, ADJ, CARBON 4.7K
RV201	1-223-240-21	RES, ADJ, CARBON 22K
RV202	1-238-856-11	RES, ADJ, CERMET 10K
RV203	1-223-240-21	RES, ADJ, CARBON 22K
RV501	1-223-991-21	RES, CARBON ADJ VAR 1K
RV502	1-223-994-21	RES, CARBON ADJ VAR 4.7K
RV503	1-223-994-21	RES, CARBON ADJ VAR 4.7K
RV504	1-223-996-21	RES, CARBON ADJ VAR 22K
RV505	1-223-994-21	RES, CARBON ADJ VAR 4.7K
RV506	1-223-994-21	RES, CARBON ADJ VAR 4.7K
RV507	1-223-996-21	RES, CARBON ADJ VAR 22K
RV508	1-223-996-21	RES, CARBON ADJ VAR 22K
RV509	1-223-994-21	RES, CARBON ADJ VAR 4.7K
RV510	1-223-996-21	RES, CARBON ADJ VAR 22K
RV511	1-223-990-21	RES, CARBON ADJ VAR 470
RV512	1-223-992-21	RES, CARBON ADJ VAR 2.2K
RV513	1-223-991-21	RES, CARBON ADJ VAR 1K
RV514	1-223-991-21	RES, CARBON ADJ VAR 1K

< VIBRATOR >

X001	1-767-308-21	VIBRATOR, CRYSTAL
X002	1-760-239-11	VIBRATOR, CRYSTAL 16MHz
X501	1-577-117-11	VIBRATOR, CRYSTAL 4.4MHz

MV-34

Ref. No.	Part No.	Description	Remarks
*	A-7066-973-A	MV-34 (NP) BOARD, COMPLETE(MN,NP,NR) **********	
*	A-7066-974-A	MV-34 (VC) BOARD, COMPLETE(AS,VC) **********	
*	A-7066-977-A	MV-34 (UX) BOARD, COMPLETE(UX) **********	
*	A-7066-998-A	MV-34 (B) BOARD, COMPLETE (B) **********	
			(Ref.No.: 4,000 Series)
	1-555-110-00	CABLE, PIN	
*	3-741-933-01	HEAT SINK	
*	3-960-273-01	SPACER, TOP END	
*	3-960-274-01	SPACER, LED	
	7-685-646-79	SCREW +BVTP 3X8 TYPE2 IT-3	

< CAPACITOR >

Ref. No.	Part No.	Description			Remarks
C001	1-163-038-00	CERAMIC CHIP	0.1uF		25V
C002	1-163-038-00	CERAMIC CHIP	0.1uF		25V
C003	1-164-004-11	CERAMIC CHIP	0.1uF	10%	25V
C011	1-164-232-11	CERAMIC CHIP	0.01uF		50V
C054	1-137-373-11	FILM	0.033uF	5%	50V
C055	1-164-232-11	CERAMIC CHIP	0.01uF		50V
C056	1-126-157-11	ELECT	10uF	20%	16V
C057	1-137-441-11	FILM	0.027uF	5%	50V
C058	1-124-257-00	ELECT	2.2uF	20%	50V
C071	1-164-004-11	CERAMIC CHIP	0.1uF	10%	25V
C072	1-164-004-11	CERAMIC CHIP	0.1uF	10%	25V
C073	1-110-398-11	TANTAL. CHIP	15uF	20%	35V
C074	1-164-004-11	CERAMIC CHIP	0.1uF	10%	25V
C075	1-164-004-11	CERAMIC CHIP	0.1uF	10%	25V
C076	1-164-004-11	CERAMIC CHIP	0.1uF	10%	25V
C077	1-164-004-11	CERAMIC CHIP	0.1uF	10%	25V
C078	1-126-205-11	ELECT CHIP	47uF	20%	6.3V
C079	1-164-232-11	CERAMIC CHIP	0.01uF		50V
C091	1-126-603-11	ELECT CHIP	4.7uF	20%	35V
C101	1-164-232-11	CERAMIC CHIP	0.01uF		50V
C102	1-126-154-11	ELECT	47uF	20%	6.3V
C103	1-164-344-11	CERAMIC CHIP	0.068uF	10%	25V
C104	1-126-153-11	ELECT	22uF	20%	6.3V
C105	1-124-584-00	ELECT	100uF	20%	10V
C106	1-163-009-11	CERAMIC CHIP	0.001uF	10%	50V
C107	1-163-017-00	CERAMIC CHIP	0.0047uF	5%	50V
C108	1-104-329-11	CERAMIC CHIP	0.1uF	10%	50V
C109	1-124-257-00	ELECT	2.2uF	20%	50V
C112	1-126-961-11	ELECT	2.2uF	20%	50V
C201	1-164-004-11	CERAMIC CHIP	0.1uF	10%	25V
C202	1-164-346-11	CERAMIC CHIP	1uF		16V
C203	1-126-154-11	ELECT	47uF	20%	6.3V
C205	1-164-004-11	CERAMIC CHIP	0.1uF	10%	25V
C210	1-128-057-11	ELECT	330uF	20%	6.3V
C211	1-163-229-11	CERAMIC CHIP	12PF	5%	50V
C212	1-163-229-11	CERAMIC CHIP	12PF	5%	50V
C213	1-164-346-11	CERAMIC CHIP	1uF		16V
C214	1-164-232-11	CERAMIC CHIP	0.01uF		50V
C240	1-163-005-11	CERAMIC CHIP	470PF	10%	50V
C251	1-164-004-11	CERAMIC CHIP	0.1uF	10%	25V
C253	1-124-464-11	ELECT	0.22uF	20%	50V
C254	1-126-154-11	ELECT	47uF	20%	6.3V
C255	1-164-232-11	CERAMIC CHIP	0.01uF		50V
C261	1-124-635-00	ELECT	220uF	20%	6.3V
C262	1-163-009-11	CERAMIC CHIP	0.001uF	10%	50V
C264	1-163-009-11	CERAMIC CHIP	0.001uF	10%	50V
C266	1-163-009-11	CERAMIC CHIP	0.001uF	10%	50V
C267	1-163-009-11	CERAMIC CHIP	0.001uF	10%	50V
C273	1-126-154-11	ELECT	47uF	20%	6.3V
C274	1-164-004-11	CERAMIC CHIP	0.1uF	10%	25V
C281	1-124-589-11	ELECT	47uF	20%	16V
C284	1-126-154-11	ELECT	47uF	20%	6.3V
C301	1-165-319-11	CERAMIC CHIP	0.1uF		50V
C302	1-163-104-00	CERAMIC CHIP	30PF	5%	50V
C303	1-165-319-11	CERAMIC CHIP	0.1uF		50V
C304	1-164-489-11	CERAMIC CHIP	0.22uF	10%	16V
C306	1-164-161-11	CERAMIC CHIP	0.0022uF	10%	100V
C307	1-164-161-11	CERAMIC CHIP	0.0022uF	10%	100V
C308	1-126-157-11	ELECT	10uF	20%	16V
C309	1-165-319-11	CERAMIC CHIP	0.1uF		50V
C310	1-124-589-11	ELECT	47uF	20%	16V
C311	1-164-232-11	CERAMIC CHIP	0.01uF		50V
C401	1-126-966-11	ELECT	33uF	20%	16V
C402	1-124-229-00	ELECT	33uF	20%	10V
C403	1-164-232-11	CERAMIC CHIP	0.01uF		50V
C415	1-126-926-11	ELECT	1000uF	20%	10V
C416	1-163-038-00	CERAMIC CHIP	0.1uF		25V
C422	1-107-839-11	ELECT CHIP	6.8uF	20%	16V
C429	1-164-232-11	CERAMIC CHIP	0.01uF		50V
C444	1-115-339-11	CERAMIC CHIP	0.1uF	10%	50V
C462	1-126-966-11	ELECT	33uF	20%	16V
C463	1-126-966-11	ELECT	33uF	20%	16V
C469	1-126-963-11	ELECT	4.7uF	20%	50V
C485	1-126-400-11	ELECT	22uF	20%	35V
C486	1-115-339-11	CERAMIC CHIP	0.1uF	10%	50V
C487	1-124-589-11	ELECT	47uF	20%	16V
C488	1-115-339-11	CERAMIC CHIP	0.1uF	10%	50V
C489	1-126-197-11	ELECT	10uF	20%	50V
C490	1-115-339-11	CERAMIC CHIP	0.1uF	10%	50V
C501	1-164-004-11	CERAMIC CHIP	0.1uF	10%	25V
C502	1-126-933-11	ELECT	100uF	20%	10V
C503	1-164-232-11	CERAMIC CHIP	0.01uF		50V
C504	1-126-933-11	ELECT	100uF	20%	10V
C524	1-126-964-11	ELECT	10uF	20%	50V
C534	1-126-961-11	ELECT	2.2uF	20%	50V
C535	1-126-961-11	ELECT	2.2uF	20%	50V
C536	1-126-964-11	ELECT	10uF	20%	50V
C540	1-126-967-11	ELECT	47uF	20%	10V
C542	1-164-232-11	CERAMIC CHIP	0.01uF		50V
C547	1-126-963-11	ELECT	4.7uF	20%	50V
C551	1-126-963-11	ELECT	4.7uF	20%	50V
C552	1-164-232-11	CERAMIC CHIP	0.01uF		50V
C554	1-124-589-11	ELECT	47uF	20%	16V
C556	1-164-232-11	CERAMIC CHIP	0.01uF		50V
C578	1-163-037-11	CERAMIC CHIP	0.022uF	10%	25V
C579	1-164-232-11	CERAMIC CHIP	0.01uF		50V
C580	1-126-967-11	ELECT	47uF	20%	10V
C581	1-164-161-11	CERAMIC CHIP	0.0022uF	10%	100V
C582	1-163-017-00	CERAMIC CHIP	0.0047uF	5%	50V
C583	1-163-009-11	CERAMIC CHIP	0.001uF	10%	50V
C584	1-126-961-11	ELECT	2.2uF	20%	50V
C598	1-163-016-00	CERAMIC CHIP	0.0039uF	10%	50V
C599	1-163-011-11	CERAMIC CHIP	0.0015uF	10%	50V
C601	1-104-760-11	CERAMIC CHIP	0.047uF	10%	50V
C602	1-126-157-11	ELECT	10uF	20%	16V

Ref. No.	Part No.	Description			Remarks
C603	1-163-037-11	CERAMIC CHIP	0.022uF	10%	25V
C604	1-126-163-11	ELECT	4.7uF	20%	50V
C605	1-126-154-11	ELECT	47uF	20%	6.3V
C606	1-164-232-11	CERAMIC CHIP	0.01uF		50V
C607	1-124-584-00	ELECT	100uF	20%	10V
C608	1-137-372-11	FILM	0.022uF	5%	50V
C609	1-126-967-11	ELECT	47uF	20%	10V
C610	1-164-232-11	CERAMIC CHIP	0.01uF		50V
C611	1-163-037-11	CERAMIC CHIP	0.022uF	10%	25V
C612	1-126-963-11	ELECT	4.7uF	20%	50V
C613	1-126-964-11	ELECT	10uF	20%	50V
C614	1-126-962-11	ELECT	3.3uF	20%	50V
C615	1-126-962-11	ELECT	3.3uF	20%	50V
C616	1-128-551-11	ELECT	22uF	20%	25V
C617	1-126-967-11	ELECT	47uF	20%	16V
C618	1-126-960-11	ELECT	1uF	20%	50V
C619	1-137-370-11	FILM	0.01uF	5%	50V
C620	1-126-963-11	ELECT	4.7uF	20%	50V
C621	1-163-014-00	CERAMIC CHIP	0.0027uF	5%	50V
C622	1-163-143-00	CERAMIC CHIP	0.0012uF	5%	50V
C623	1-126-961-11	ELECT	2.2uF	20%	50V
C624	1-163-275-11	CERAMIC CHIP	0.001uF	5%	50V
C625	1-163-275-11	CERAMIC CHIP	0.001uF	5%	50V
C626	1-163-145-00	CERAMIC CHIP	0.0015uF	5%	50V
C627	1-163-145-00	CERAMIC CHIP	0.0015uF	5%	50V
C628	1-124-455-00	ELECT	100uF	20%	16V
C629	1-124-584-00	ELECT	100uF	20%	10V
C630	1-126-205-11	ELECT CHIP	47uF	20%	6.3V
C651	1-137-612-11	FILM	0.0068uF		100V
C652	1-164-232-11	CERAMIC CHIP	0.01uF		50V
C653	1-163-011-11	CERAMIC CHIP	0.0015uF	10%	50V
C654	1-137-453-11	FILM	560PF	5%	100V
C655	1-104-697-11	FILM	0.047uF	5%	100V
C656	1-164-232-11	CERAMIC CHIP	0.01uF		50V
C657	1-163-011-11	CERAMIC CHIP	0.0015uF	10%	50V
C658	1-124-455-00	ELECT	100uF	20%	16V
C659	1-124-455-00	ELECT	100uF	20%	16V
C660	1-163-145-00	CERAMIC CHIP	0.0015uF	5%	50V
C661	1-124-589-11	ELECT	47uF	20%	16V
C701	1-126-964-11	ELECT	10uF	20%	50V
C702	1-126-964-11	ELECT	10uF	20%	50V
C703	1-126-967-11	ELECT	47uF	20%	10V
C704	1-126-967-11	ELECT	47uF	20%	10V
C705	1-164-004-11	CERAMIC CHIP	0.1uF	10%	25V
C706	1-126-967-11	ELECT	47uF	20%	16V
C707	1-126-967-11	ELECT	47uF	20%	10V
C708	1-126-964-11	ELECT	10uF	20%	50V
C709	1-126-964-11	ELECT	10uF	20%	50V
C710	1-124-290-00	ELECT	47uF	20%	10V
C711	1-126-964-11	ELECT	10uF	20%	50V
C712	1-126-964-11	ELECT	10uF	20%	50V
C713	1-126-964-11	ELECT	10uF	20%	50V
C714	1-126-964-11	ELECT	10uF	20%	50V
C715	1-164-232-11	CERAMIC CHIP	0.01uF		50V
C716	1-126-964-11	ELECT	10uF	20%	50V
C717	1-164-232-11	CERAMIC CHIP	0.01uF		50V
C718	1-126-963-11	ELECT	4.7uF	20%	50V
C719	1-126-967-11	ELECT	47uF	20%	10V
C720	1-126-963-11	ELECT	4.7uF	20%	50V
C721	1-164-232-11	CERAMIC CHIP	0.01uF		50V

Ref. No.	Part No.	Description			Remarks
C722	1-126-967-11	ELECT	47uF	20%	10V
C723	1-126-964-11	ELECT	10uF	20%	50V
C724	1-126-163-11	ELECT	4.7uF	20%	50V
C725	1-126-163-11	ELECT	4.7uF	20%	50V
C726	1-126-967-11	ELECT	47uF	20%	10V
C727	1-164-232-11	CERAMIC CHIP	0.01uF		50V
C728	1-126-967-11	ELECT	47uF	20%	10V
C729	1-164-232-11	CERAMIC CHIP	0.01uF		50V
C730	1-128-551-11	ELECT	22uF	20%	25V
C731	1-126-964-11	ELECT	10uF	20%	50V
C732	1-164-232-11	CERAMIC CHIP	0.01uF		50V
C733	1-126-963-11	ELECT	4.7uF	20%	50V
C734	1-126-963-11	ELECT	4.7uF	20%	50V
C735	1-164-232-11	CERAMIC CHIP	0.01uF		50V
C736	1-164-232-11	CERAMIC CHIP	0.01uF		50V
C737	1-124-589-11	ELECT	47uF	20%	16V
C738	1-126-157-11	ELECT	10uF	20%	16V
C739	1-126-157-11	ELECT	10uF	20%	16V
C740	1-124-589-11	ELECT	47uF	20%	16V
C741	1-115-871-11	ELECT	1uF	20%	50V
C742	1-115-871-11	ELECT	1uF	20%	50V
C744	1-164-232-11	CERAMIC CHIP	0.01uF		50V
C747	1-163-251-11	CERAMIC CHIP	100PF	5%	50V
C751	1-163-251-11	CERAMIC CHIP	100PF	5%	50V
C755	1-164-004-11	CERAMIC CHIP	0.1uF	10%	25V
C802	1-163-235-11	CERAMIC CHIP	22PF	5%	50V
C803	1-163-229-11	CERAMIC CHIP	12PF	5%	50V
C804	1-163-229-11	CERAMIC CHIP	12PF	5%	50V
C806	1-128-057-11	ELECT	330uF	20%	6.3V
C807	1-164-232-11	CERAMIC CHIP	0.01uF		50V
C809	1-163-038-00	CERAMIC CHIP	0.1uF		25V
C810	1-126-926-11	ELECT	1000uF	20%	10V
C811	1-164-004-11	CERAMIC CHIP	0.1uF	10%	25V
C812	1-163-038-00	CERAMIC CHIP	0.1uF		25V
C813	1-126-513-11	ELECT	47uF	20%	6.3V
C819	1-164-004-11	CERAMIC CHIP	0.1uF	10%	25V
C820	1-164-346-11	CERAMIC CHIP	1uF		16V
C920	1-126-791-11	ELECT	10uF	20%	16V
C921	1-126-791-11	ELECT	10uF	20%	16V
C922	1-164-232-11	CERAMIC CHIP	0.01uF		50V
C923	1-163-038-00	CERAMIC CHIP	0.1uF		25V
C924	1-126-967-11	ELECT	47uF	20%	10V
C925	1-164-232-11	CERAMIC CHIP	0.01uF		50V
C926	1-164-232-11	CERAMIC CHIP	0.01uF		50V
C927	1-126-967-11	ELECT	47uF	20%	10V
C928	1-163-227-11	CERAMIC CHIP	10PF	0.5PF	50V
C929	1-163-102-00	CERAMIC CHIP	24PF	5%	50V
C930	1-163-235-11	CERAMIC CHIP	22PF	5%	50V
C931	1-163-239-11	CERAMIC CHIP	33PF	5%	50V
C932	1-126-961-11	ELECT	2.2uF	20%	50V
C934	1-164-343-11	CERAMIC CHIP	0.056uF	10%	25V
C935	1-163-037-11	CERAMIC CHIP	0.022uF	10%	25V
C936	1-163-139-00	CERAMIC CHIP	820PF	5%	50V
C937	1-126-960-11	ELECT	1uF	20%	50V
C938	1-164-232-11	CERAMIC CHIP	0.01uF		50V
C939	1-126-967-11	ELECT	47uF	20%	10V
C940	1-164-232-11	CERAMIC CHIP	0.01uF		50V
C953	1-164-232-11	CERAMIC CHIP	0.01uF		50V
C955	1-126-916-11	ELECT	1000uF	20%	6.3V
C957	1-126-926-11	ELECT	1000uF	20%	10V

Ref. No.	Part No.	Description			Remarks
C959	1-164-232-11	CERAMIC CHIP	0.01uF		50V
C961	1-126-967-11	ELECT	47uF	20%	16V
C966	1-126-967-11	ELECT	47uF	20%	10V
C967	1-164-232-11	CERAMIC CHIP	0.01uF		50V
C968	1-164-232-11	CERAMIC CHIP	0.01uF		50V
C975	1-164-232-11	CERAMIC CHIP	0.01uF		50V(B)
C976	1-164-232-11	CERAMIC CHIP	0.01uF		50V
C978	1-163-239-11	CERAMIC CHIP	33PF	5%	50V(B)
C979	1-164-232-11	CERAMIC CHIP	0.01uF		50V(B)
C986	1-115-339-11	CERAMIC CHIP	0.1uF	10%	50V
C987	1-104-905-11	CAPACITOR	0.22F		5.5V
		< CONNECTOR >			
* CN002	1-766-538-11	CONNECTOR, BOARD TO BOARD 8P			
* CN003	1-766-537-11	CONNECTOR (HMD) 5P			
* CN004	1-766-716-11	CONNECTOR, BOARD TO BOARD 3P			
* CN006	1-573-128-11	PIN, CONNECTOR 5P			
* CN101	1-564-028-00	PIN, CONNECTOR 3P			
CN102	1-506-468-11	PIN, CONNECTOR 3P			
CN301	1-573-852-11	CONNECTOR, BOARD TO BOARD 20P			
CN302	1-573-852-11	CONNECTOR, BOARD TO BOARD 20P			
CN400	1-506-480-11	PIN, CONNECTOR 15P			
CN401	1-569-901-11	SOCKET, CONNECTOR 5P			
* CN403	1-568-942-11	PIN, CONNECTOR 4P			
CN404	1-569-920-11	SOCKET, CONNECTOR 28P			
CN601	1-506-468-11	PIN, CONNECTOR 3P			
CN602	1-506-469-11	PIN, CONNECTOR 4P			
CN702	1-569-945-31	SOCKET, CONNECTOR 29P			
* CN705	1-568-788-21	PIN, CONNECTOR 11P			
CN707	1-569-932-31	SOCKET, CONNECTOR 15P			
CN708	1-569-939-31	SOCKET, CONNECTOR 23P			
		< CONPOSITION CIRCUIT BLOCK >			
⚠CP402	1-473-502-11	CONVERTER UNIT, DC/DC			
		< TRIMMER >			
CT801	1-141-443-11	CAP, CERAMIC TRIMMER 30PF			
		< DIODE >			
D001	8-719-210-33	DIODE EC10DS2			
D010	8-719-404-49	DIODE MA111			
D051	8-719-404-49	DIODE MA111			
D071	8-719-422-97	DIODE MA8091-M			
D203	8-719-210-33	DIODE EC10DS2			
D205	8-719-404-49	DIODE MA111			
D261	8-719-048-26	DIODE GL528V1			
D265	8-719-422-62	DIODE MA8062-L-TX			
D267	8-719-422-62	DIODE MA8062-L-TX			
D403	8-719-210-33	DIODE EC10DS2			
D405	8-719-106-31	DIODE RD8.2M-B1			
D501	8-719-976-XX	DIODE UDZ-TE-17-5.1B			
D502	8-719-988-62	DIODE 1SS355			
D512	8-719-042-79	DIODE MA8300-H-TX			
D513	8-719-404-49	DIODE MA111			
D601	8-719-404-49	DIODE MA111			
D701	8-719-106-31	DIODE RD8.2M-B1			
D801	8-719-951-30	DIODE ERA91-02			
D802	8-719-210-33	DIODE EC10DS2			
D901	8-719-421-59	DIODE MA3075WA-(TX)			

Ref. No.	Part No.	Description	Remarks
D903	8-719-421-59	DIODE MA3075WA-(TX)	
D905	8-719-801-78	DIODE 1SS184	
		< FILTER >	
FL002	1-236-163-11	ENCAPSULATED COMPONENT	
FL004	1-236-163-11	ENCAPSULATED COMPONENT	
		< IC >	
IC051	8-759-702-02	IC NJM062M	
IC071	8-759-294-26	IC BA6209-V2	
IC101	8-759-246-14	IC TA8823N	
IC201	8-752-878-82	IC CXP87240A-039Q	
IC271	8-759-097-80	IC HD49783FP-T1	
IC301	8-759-289-73	IC SDA5649X-GEG	
IC401	8-759-054-12	IC PQ09RF11	
IC407	8-759-189-48	IC PQ12RE11	
IC601	8-759-365-31	IC XLH7779K-E2	
IC602	8-759-089-84	IC BA7755AF-T1	
IC701	8-759-700-65	IC NJM79L05A	
IC702	8-759-426-79	IC SN761263APG-S	
IC705	8-759-084-76	IC MM1111XFF	
IC706	8-759-084-76	IC MM1111XFF	
IC801	8-752-883-58	IC CXP87360-049Q	
IC802	8-759-248-87	IC MM1256XF-BE	
IC901	8-759-460-57	IC MB90089PF-G-187-BND-ER	
IC902	8-759-164-09	IC LA7218M-TE-R	
IC912	8-759-084-76	IC MM1111XFF (B)	
		< JACK >	
J901	1-764-592-41	JACK 3P (VIDEO, AUDIO LINE OUT)	
J902	1-778-773-11	TERMINAL, S (S VIDEO LINE OUT)	
		< JUMPER RESISTOR >	
JS401	1-216-295-00	METAL CHIP 0 5% 1/10W	
JS902	1-216-295-00	METAL CHIP 0 5% 1/10W	(AS,MN,NP,NR,UX,VC)
		< COIL >	
L051	1-412-963-11	INDUCTOR 100uH	
L101	1-410-482-31	INDUCTOR 100uH	
L202	1-414-398-11	INDUCTOR 10uH	
L271	1-412-963-11	INDUCTOR 100uH	
L301	1-412-958-21	INDUCTOR 39uH	
L401	1-414-404-11	INDUCTOR 100uH	
L413	1-410-385-11	INDUCTOR CHIP 22uH	
L414	1-414-392-21	INDUCTOR 1uH	
L415	1-414-392-21	INDUCTOR 1uH	
L503	1-414-398-11	INDUCTOR 10uH	
L507	1-410-482-31	INDUCTOR 100uH	
L512	1-414-402-11	INDUCTOR 47uH	
L513	1-410-478-11	INDUCTOR 47uH	
L521	1-412-943-11	INDUCTOR 2.2uH	
L522	1-412-943-11	INDUCTOR 2.2uH	
L651	1-410-687-11	INDUCTOR 1.2mH	
L652	1-410-687-11	INDUCTOR 1.2mH	
L701	1-414-398-11	INDUCTOR 10uH	
L702	1-414-398-11	INDUCTOR 10uH	
L801	1-414-398-11	INDUCTOR 10uH	

Note : The components identified by mark ⚠ or dotted line with mark ⚠ are critical for safety. Replace only with part number specified.

Ref. No.	Part No.	Description	Remarks
L901	1-414-398-11	INDUCTOR 10uH	
L902	1-410-385-11	INDUCTOR CHIP 22uH	
L903	1-414-392-21	INDUCTOR 1uH	
L905	1-414-398-11	INDUCTOR 10uH	
L907	1-412-957-11	INDUCTOR 33uH (B)	
		< PHOTO INTERRUPTER >	
PH261	8-749-010-19	PHOTO INTERRUPTER GP3S113	
PH262	8-749-010-20	PHOTO INTERRUPTER GP3S114	
		< IC LINK >	
⚠PS001	1-532-675-21	LINK, IC	
⚠PS002	1-532-727-11	LINK, IC 0.25A	
⚠PS401	1-532-685-00	LINK, IC	
⚠PS601	1-532-605-00	LINK, IC 0.4A	
		< THERMISTOR >	
⚠PTH601	1-202-855-00	THERMISTOR, POSITIVE	
		< TRANSISTOR >	
Q004	8-729-140-93	TRANSISTOR 2SB733-34	
Q005	8-729-421-19	TRANSISTOR UN2213	
Q007	8-729-010-05	TRANSISTOR MSB709-RT1	
Q254	8-729-422-29	TRANSISTOR 2SD601A-S	
Q261	8-729-025-92	PHOTO TRANSISTOR PT380F	
Q262	8-729-025-92	PHOTO TRANSISTOR PT380F	
Q263	8-729-921-12	TRANSISTOR 2SD1834	
Q301	8-729-010-25	TRANSISTOR MSD601-RT1	
Q302	8-729-010-25	TRANSISTOR MSD601-RT1	
Q303	8-729-010-05	TRANSISTOR MSB709-RT1	
Q304	8-729-010-25	TRANSISTOR MSD601-RT1	
Q305	8-729-010-05	TRANSISTOR MSB709-RT1	
Q306	8-729-010-05	TRANSISTOR MSB709-RT1	
Q502	8-729-010-05	TRANSISTOR MSB709-RT1	
Q505	8-729-028-70	TRANSISTOR UN2225T-(TX)	
Q506	8-729-421-22	TRANSISTOR UN2211	
Q507	8-729-028-70	TRANSISTOR UN2225T-(TX)	
Q509	8-729-028-70	TRANSISTOR UN2225T-(TX)	
Q512	8-729-230-49	TRANSISTOR 2SC2712-YG	
Q513	8-729-010-05	TRANSISTOR MSB709-RT1	
Q515	8-729-010-05	TRANSISTOR MSB709-RT1	
Q516	8-729-010-25	TRANSISTOR MSD601-RT1	
Q517	8-729-421-19	TRANSISTOR UN2213	
Q518	8-729-421-19	TRANSISTOR UN2213	
Q520	8-729-421-22	TRANSISTOR UN2211	
Q521	8-729-026-49	TRANSISTOR 2SA1037AK-T146-QR	
Q522	8-729-027-59	TRANSISTOR DTC144EKA-T146	
Q523	8-729-106-68	TRANSISTOR 2SD1615A-GP	
Q552	8-729-424-18	TRANSISTOR UN2113	
Q601	8-729-820-68	TRANSISTOR 2SD1802FA-S	
Q602	8-729-804-41	TRANSISTOR 2SB1122-S	
Q651	8-729-012-31	TRANSISTOR 2SC4040-TL2-Q	
Q652	8-729-012-31	TRANSISTOR 2SC4040-TL2-Q	
Q653	8-729-900-51	TRANSISTOR DTA114TK	
Q654	8-729-900-51	TRANSISTOR DTA114TK	
Q655	8-729-010-25	TRANSISTOR MSD601-RT1	
Q701	8-729-010-05	TRANSISTOR MSB709-RT1	
Q702	8-729-010-05	TRANSISTOR MSB709-RT1	
Q703	8-729-010-05	TRANSISTOR MSB709-RT1	
Q704	8-729-010-05	TRANSISTOR MSB709-RT1	

Ref. No.	Part No.	Description	Remarks
Q705	8-729-421-19	TRANSISTOR UN2213	
Q706	8-729-421-19	TRANSISTOR UN2213	
Q707	8-729-106-68	TRANSISTOR 2SD1615A-GP	
Q801	8-729-424-08	TRANSISTOR UN2111	
Q802	8-729-424-59	TRANSISTOR UN2212	
Q901	8-729-010-25	TRANSISTOR MSD601-RT1	
Q902	8-729-010-25	TRANSISTOR MSD601-RT1	
Q903	8-729-010-05	TRANSISTOR MSB709-RT1	
Q904	8-729-216-21	TRANSISTOR 2SA1162Y-TE85L	
Q905	8-729-216-21	TRANSISTOR 2SA1162Y-TE85L	
Q911	8-729-010-05	TRANSISTOR MSB709-RT1	
Q913	8-729-010-05	TRANSISTOR MSB709-RT1	
Q915	8-729-010-05	TRANSISTOR MSB709-RT1	
Q920	8-729-010-25	TRANSISTOR MSD601-RT1	
Q921	8-729-421-19	TRANSISTOR UN2213	
Q922	8-729-424-18	TRANSISTOR UN2113	
Q924	8-729-028-70	TRANSISTOR UN2225T-(TX)	
Q925	8-729-010-25	TRANSISTOR MSD601-RT1 (B)	
Q926	8-729-421-19	TRANSISTOR UN2213 (B)	
Q927	8-729-028-70	TRANSISTOR UN2225T-(TX)	
Q928	8-729-028-70	TRANSISTOR UN2225T-(TX)	
Q929	8-729-028-70	TRANSISTOR UN2225T-(TX)	
		< RESISTOR >	
R010	1-216-689-11	METAL CHIP 39K 0.5% 1/10W	
R011	1-216-073-00	METAL CHIP 10K 5% 1/10W	
R012	1-216-065-00	METAL CHIP 4.7K 5% 1/10W	
R013	1-216-065-00	METAL CHIP 4.7K 5% 1/10W	
R051	1-216-089-91	METAL GLAZE 47K 5% 1/10W	
R052	1-216-089-91	METAL GLAZE 47K 5% 1/10W	
R053	1-216-089-91	METAL GLAZE 47K 5% 1/10W	
R054	1-216-089-91	METAL GLAZE 47K 5% 1/10W	
R056	1-216-689-11	METAL CHIP 39K 0.5% 1/10W	
R057	1-216-073-00	METAL CHIP 10K 5% 1/10W	
R058	1-216-049-00	METAL CHIP 1K 5% 1/10W	
R062	1-216-057-00	METAL CHIP 2.2K 5% 1/10W	
R063	1-216-057-00	METAL CHIP 2.2K 5% 1/10W	
R064	1-216-103-00	METAL CHIP 180K 5% 1/10W	
R065	1-216-073-00	METAL CHIP 10K 5% 1/10W	
R066	1-216-295-00	METAL CHIP 0 5% 1/10W	
R073	1-216-065-00	METAL CHIP 4.7K 5% 1/10W	
R074	1-216-083-00	METAL CHIP 27K 5% 1/10W	
R075	1-216-056-00	METAL GLAZE 2K 5% 1/10W	
R076	1-216-093-00	METAL CHIP 68K 5% 1/10W	
R077	1-216-068-00	METAL CHIP 6.2K 5% 1/10W	
R078	1-216-075-00	METAL CHIP 12K 5% 1/10W	
R092	1-216-295-00	METAL CHIP 0 5% 1/10W	
R094	1-216-296-00	METAL CHIP 0 5% 1/8W	
R095	1-216-296-00	METAL CHIP 0 5% 1/8W	
R096	1-216-296-00	METAL CHIP 0 5% 1/8W	
R099	1-216-296-00	METAL CHIP 0 5% 1/8W	
R101	1-216-119-00	METAL CHIP 820K 5% 1/10W	
R102	1-216-093-00	METAL CHIP 68K 5% 1/10W	
R103	1-216-097-91	METAL GLAZE 100K 5% 1/10W	
R104	1-216-097-91	METAL GLAZE 100K 5% 1/10W	
R105	1-216-085-00	METAL CHIP 33K 5% 1/10W	
R106	1-216-065-00	METAL CHIP 4.7K 5% 1/10W	
R107	1-216-037-00	METAL CHIP 330 5% 1/10W	
R112	1-216-113-00	METAL CHIP 470K 5% 1/10W	

Note : The components identified by mark ⚠ or dotted line with mark ⚠ are critical for safety. Replace only with part number specified.

MV-34

Ref. No.	Part No.	Description			Remarks
R113	1-216-089-91	METAL GLAZE	47K	5%	1/10W
R114	1-216-295-00	METAL CHIP	0	5%	1/10W
R202	1-216-073-00	METAL CHIP	10K	5%	1/10W
R203	1-216-041-00	METAL CHIP	470	5%	1/10W
R204	1-216-107-00	METAL CHIP	270K	5%	1/10W
R205	1-216-095-00	METAL CHIP	82K	5%	1/10W
R208	1-216-295-00	METAL CHIP	0	5%	1/10W
R211	1-216-041-00	METAL CHIP	470	5%	1/10W
R212	1-216-295-00	METAL CHIP	0	5%	1/10W
R213	1-216-081-00	METAL CHIP	22K	5%	1/10W
R215	1-216-065-00	METAL CHIP	4.7K	5%	1/10W
R216	1-216-295-00	METAL CHIP	0	5%	1/10W
R217	1-216-295-00	METAL CHIP	0	5%	1/10W
R218	1-216-041-00	METAL CHIP	470	5%	1/10W
R219	1-216-295-00	METAL CHIP	0	5%	1/10W
R220	1-216-295-00	METAL CHIP	0	5%	1/10W
R225	1-216-089-91	METAL GLAZE	47K	5%	1/10W
R228	1-216-041-00	METAL CHIP	470	5%	1/10W
R229	1-216-073-00	METAL CHIP	10K	5%	1/10W
R230	1-216-073-00	METAL CHIP	10K	5%	1/10W
R231	1-216-295-00	METAL CHIP	0	5%	1/10W
R232	1-216-041-00	METAL CHIP	470	5%	1/10W
R233	1-216-041-00	METAL CHIP	470	5%	1/10W
R234	1-216-041-00	METAL CHIP	470	5%	1/10W
R235	1-216-049-00	METAL CHIP	1K	5%	1/10W
R236	1-216-049-00	METAL CHIP	1K	5%	1/10W
R237	1-216-069-00	METAL CHIP	6.8K	5%	1/10W
R238	1-216-069-00	METAL CHIP	6.8K	5%	1/10W
R239	1-216-069-00	METAL CHIP	6.8K	5%	1/10W
R241	1-216-077-00	METAL CHIP	15K	5%	1/10W
R242	1-216-069-00	METAL CHIP	6.8K	5%	1/10W
R243	1-216-073-00	METAL CHIP	10K	5%	1/10W
R244	1-216-073-00	METAL CHIP	10K	5%	1/10W
R245	1-216-077-00	METAL CHIP	15K	5%	1/10W
R253	1-216-049-00	METAL CHIP	1K	5%	1/10W
R254	1-216-065-00	METAL CHIP	4.7K	5%	1/10W
R255	1-216-073-00	METAL CHIP	10K	5%	1/10W
R256	1-249-400-11	CARBON	39	5%	1/4W F
R257	1-216-057-00	METAL CHIP	2.2K	5%	1/10W
R258	1-216-689-11	METAL CHIP	39K	0.5%	1/10W
R260	1-216-041-00	METAL CHIP	470	5%	1/10W
R261	1-216-041-00	METAL CHIP	470	5%	1/10W
R262	1-249-400-11	CARBON	39	5%	1/4W F
R264	1-216-107-00	METAL CHIP	270K	5%	1/10W
R265	1-216-107-00	METAL CHIP	270K	5%	1/10W
R266	1-249-413-11	CARBON	470	5%	1/4W F
R267	1-216-089-91	METAL GLAZE	47K	5%	1/10W
R268	1-216-089-91	METAL GLAZE	47K	5%	1/10W
R270	1-216-069-00	METAL CHIP	6.8K	5%	1/10W
R271	1-216-061-00	METAL CHIP	3.3K	5%	1/10W
R272	1-216-061-00	METAL CHIP	3.3K	5%	1/10W
R273	1-216-069-00	METAL CHIP	6.8K	5%	1/10W
R274	1-216-061-00	METAL CHIP	3.3K	5%	1/10W
R275	1-216-063-91	METAL GLAZE	3.9K	5%	1/10W
R276	1-216-061-00	METAL CHIP	3.3K	5%	1/10W
R277	1-216-069-00	METAL CHIP	6.8K	5%	1/10W
R278	1-216-061-00	METAL CHIP	3.3K	5%	1/10W
R279	1-216-069-00	METAL CHIP	6.8K	5%	1/10W
R280	1-216-061-00	METAL CHIP	3.3K	5%	1/10W
R281	1-216-069-00	METAL CHIP	6.8K	5%	1/10W
R282	1-216-069-00	METAL CHIP	6.8K	5%	1/10W
R283	1-216-077-00	METAL CHIP	15K	5%	1/10W
R284	1-216-061-00	METAL CHIP	3.3K	5%	1/10W
R292	1-216-296-00	METAL CHIP	0	5%	1/8W
R298	1-216-085-00	METAL CHIP	33K	5%	1/10W
R299	1-216-095-00	METAL CHIP	82K	5%	1/10W
R301	1-216-085-00	METAL CHIP	33K	5%	1/10W
R302	1-216-049-00	METAL CHIP	1K	5%	1/10W
R303	1-216-049-00	METAL CHIP	1K	5%	1/10W
R304	1-216-073-00	METAL CHIP	10K	5%	1/10W
R305	1-216-045-00	METAL CHIP	680	5%	1/10W
R306	1-216-295-00	METAL CHIP	0	5%	1/10W
R307	1-216-295-00	METAL CHIP	0	5%	1/10W
R308	1-216-057-00	METAL CHIP	2.2K	5%	1/10W
R309	1-216-047-91	METAL GLAZE	820	5%	1/10W
R310	1-216-029-00	METAL CHIP	150	5%	1/10W
R311	1-216-035-00	METAL CHIP	270	5%	1/10W
R312	1-216-295-00	METAL CHIP	0	5%	1/10W
R313	1-216-295-00	METAL CHIP	0	5%	1/10W
R314	1-216-295-00	METAL CHIP	0	5%	1/10W
R315	1-216-295-00	METAL CHIP	0	5%	1/10W
R316	1-216-295-00	METAL CHIP	0	5%	1/10W
R317	1-216-097-91	METAL GLAZE	100K	5%	1/10W
R318	1-216-057-00	METAL CHIP	2.2K	5%	1/10W
R319	1-216-117-00	METAL CHIP	680K	5%	1/10W
R321	1-216-069-00	METAL CHIP	6.8K	5%	1/10W
R322	1-216-123-11	METAL CHIP	1.2M	5%	1/10W
R323	1-216-069-00	METAL CHIP	6.8K	5%	1/10W
R324	1-216-123-11	METAL CHIP	1.2M	5%	1/10W
R325	1-216-049-00	METAL CHIP	1K	5%	1/10W
R326	1-216-083-00	METAL CHIP	27K	5%	1/10W
R327	1-216-079-00	METAL CHIP	18K	5%	1/10W
R328	1-216-025-91	METAL GLAZE	100	5%	1/10W
R330	1-216-073-00	METAL CHIP	10K	5%	1/10W
R331	1-216-045-00	METAL CHIP	680	5%	1/10W
R332	1-216-045-00	METAL CHIP	680	5%	1/10W
R333	1-216-107-00	METAL CHIP	270K	5%	1/10W
R407	1-216-049-00	METAL CHIP	1K	5%	1/10W
R408	1-216-295-00	METAL CHIP	0	5%	1/10W
R421	1-216-113-00	METAL CHIP	470K	5%	1/10W
R468	1-216-061-00	METAL CHIP	3.3K	5%	1/10W
R496	1-216-295-00	METAL CHIP	0	5%	1/10W
R497	1-216-295-00	METAL CHIP	0	5%	1/10W
R499	1-216-296-00	METAL CHIP	0	5%	1/8W
R504	1-216-113-00	METAL CHIP	470K	5%	1/10W
R505	1-216-073-00	METAL CHIP	10K	5%	1/10W
R506	1-216-049-00	METAL CHIP	1K	5%	1/10W
R507	1-216-049-00	METAL CHIP	1K	5%	1/10W
R508	1-216-295-00	METAL CHIP	0	5%	1/10W
R509	1-216-295-00	METAL CHIP	0	5%	1/10W
R546	1-208-845-11	METAL GLAZE	1M	5%	1/10W
R547	1-216-073-00	METAL CHIP	10K	5%	1/10W
R560	1-216-083-00	METAL CHIP	27K	5%	1/10W (AS,MN,NP,NR,UX,VC)
R560	1-216-105-91	METAL GLAZE	220K	5%	1/10W (B)
R561	1-216-041-00	METAL CHIP	470	5%	1/10W
R562	1-216-041-00	METAL CHIP	470	5%	1/10W
R563	1-216-061-00	METAL CHIP	3.3K	5%	1/10W
R564	1-216-057-00	METAL CHIP	2.2K	5%	1/10W

Ref. No.	Part No.	Description			Remarks
R566	1-216-061-00	METAL CHIP	3.3K	5%	1/10W
R573	1-216-057-00	METAL CHIP	2.2K	5%	1/10W
R574	1-216-057-00	METAL CHIP	2.2K	5%	1/10W
R575	1-216-085-00	METAL CHIP	33K	5%	1/10W
R576	1-216-222-00	METAL GLAZE	10K	5%	1/8W
R577	1-216-222-00	METAL GLAZE	10K	5%	1/8W
R578	1-216-057-00	METAL CHIP	2.2K	5%	1/10W
R579	1-216-055-00	METAL CHIP	1.8K	5%	1/10W
R580	1-216-025-91	METAL GLAZE	100	5%	1/10W
R581	1-216-053-00	METAL CHIP	1.5K	5%	1/10W
R583	1-216-047-91	METAL GLAZE	820	5%	1/10W
R586	1-216-073-00	METAL CHIP	10K	5%	1/10W
R587	1-216-073-00	METAL CHIP	10K	5%	1/10W
R588	1-216-065-00	METAL CHIP	4.7K	5%	1/10W
R591	1-216-063-91	METAL GLAZE	3.9K	5%	1/10W
R594	1-216-025-91	METAL GLAZE	100	5%	1/10W
R595	1-216-041-00	METAL CHIP	470	5%	1/10W
R596	1-216-041-00	METAL CHIP	470	5%	1/10W
R597	1-216-053-00	METAL CHIP	1.5K	5%	1/10W
R598	1-216-049-00	METAL CHIP	1K	5%	1/10W
R599	1-216-059-00	METAL CHIP	2.7K	5%	1/10W
R601	1-216-049-00	METAL CHIP	1K	5%	1/10W
R602	1-216-049-00	METAL CHIP	1K	5%	1/10W
R603	1-216-073-00	METAL CHIP	10K	5%	1/10W
R604	1-216-050-00	METAL GLAZE	1.1K	5%	1/10W
R605	1-216-079-00	METAL CHIP	18K	5%	1/10W
R606	1-216-067-00	METAL CHIP	5.6K	5%	1/10W
R607	1-208-808-11	METAL GLAZE	12K	0.50%	1/10W
R608	1-216-081-00	METAL CHIP	22K	5%	1/10W
R609	1-208-804-11	METAL GLAZE	8.2K	0.50%	1/10W
R610	1-216-079-00	METAL CHIP	18K	5%	1/10W
R611	1-216-067-00	METAL CHIP	5.6K	5%	1/10W
R613	1-216-050-00	METAL GLAZE	1.1K	5%	1/10W
R614	1-216-129-00	METAL CHIP	2.2M	5%	1/10W
R615	1-216-069-00	METAL CHIP	6.8K	5%	1/10W
R616	1-216-073-00	METAL CHIP	10K	5%	1/10W
R617	1-216-109-00	METAL CHIP	330K	5%	1/10W
R618	1-216-041-00	METAL CHIP	470	5%	1/10W
R619	1-216-089-91	METAL GLAZE	47K	5%	1/10W
R620	1-216-099-00	METAL CHIP	120K	5%	1/10W
R621	1-216-081-00	METAL CHIP	22K	5%	1/10W
R622	1-216-083-00	METAL CHIP	27K	5%	1/10W
R623	1-216-065-00	METAL CHIP	4.7K	5%	1/10W
R624	1-216-073-00	METAL CHIP	10K	5%	1/10W
R625	1-216-278-11	METAL GLAZE	2.2M	5%	1/8W
R626	1-216-069-00	METAL CHIP	6.8K	5%	1/10W
R627	1-216-057-00	METAL CHIP	2.2K	5%	1/10W
R628	1-216-025-91	METAL GLAZE	100	5%	1/10W
R629	1-216-025-91	METAL GLAZE	100	5%	1/10W
R630	1-216-113-00	METAL CHIP	470K	5%	1/10W
R651	1-216-081-00	METAL CHIP	22K	5%	1/10W
R652	1-249-395-11	CARBON	15	5%	1/4W F
R653	1-216-073-00	METAL CHIP	10K	5%	1/10W
R654	1-216-083-00	METAL CHIP	27K	5%	1/10W
R655	1-249-394-11	CARBON	12	5%	1/4W F
R656	1-216-295-00	METAL CHIP	0	5%	1/10W
R657	1-216-089-91	METAL GLAZE	47K	5%	1/10W
R659	1-216-073-00	METAL CHIP	10K	5%	1/10W
R661	1-216-073-00	METAL CHIP	10K	5%	1/10W
R662	1-216-041-00	METAL CHIP	470	5%	1/10W

Ref. No.	Part No.	Description			Remarks
R663	1-216-041-00	METAL CHIP	470	5%	1/10W
R664	1-216-295-00	METAL CHIP	0	5%	1/10W
R668	1-216-295-00	METAL CHIP	0	5%	1/10W
R670	1-216-174-00	METAL GLAZE	100	5%	1/8W
R671	1-216-025-91	METAL GLAZE	100	5%	1/10W
R672	1-216-025-91	METAL GLAZE	100	5%	1/10W
R673	1-216-025-91	METAL GLAZE	100	5%	1/10W
R674	1-216-025-91	METAL GLAZE	100	5%	1/10W
R675	1-216-025-91	METAL GLAZE	100	5%	1/10W
R681	1-216-113-00	METAL CHIP	470K	5%	1/10W
R683	1-216-061-00	METAL CHIP	3.3K	5%	1/10W
R685	1-216-295-00	METAL CHIP	0	5%	1/10W
R701	1-216-049-00	METAL CHIP	1K	5%	1/10W
R702	1-216-049-00	METAL CHIP	1K	5%	1/10W
R703	1-208-782-11	METAL GLAZE	1K	0.50%	1/10W
R704	1-208-782-11	METAL GLAZE	1K	0.50%	1/10W
R705	1-216-073-00	METAL CHIP	10K	5%	1/10W
R706	1-208-782-11	METAL GLAZE	1K	0.50%	1/10W
R707	1-208-782-11	METAL GLAZE	1K	0.50%	1/10W
R708	1-216-057-00	METAL CHIP	2.2K	5%	1/10W
R709	1-216-041-00	METAL CHIP	470	5%	1/10W
R710	1-216-041-00	METAL CHIP	470	5%	1/10W
R711	1-216-097-91	METAL GLAZE	100K	5%	1/10W
R712	1-216-097-91	METAL GLAZE	100K	5%	1/10W
R713	1-216-053-00	METAL CHIP	1.5K	5%	1/10W
R714	1-216-053-00	METAL CHIP	1.5K	5%	1/10W
R715	1-216-053-00	METAL CHIP	1.5K	5%	1/10W
R716	1-216-053-00	METAL CHIP	1.5K	5%	1/10W
R717	1-216-041-00	METAL CHIP	470	5%	1/10W
R718	1-216-041-00	METAL CHIP	470	5%	1/10W
R719	1-216-037-00	METAL CHIP	330	5%	1/10W
R720	1-216-061-00	METAL CHIP	3.3K	5%	1/10W
R721	1-216-065-00	METAL CHIP	4.7K	5%	1/10W
R723	1-208-782-11	METAL GLAZE	1K	0.50%	1/10W
R724	1-208-782-11	METAL GLAZE	1K	0.50%	1/10W
R725	1-216-073-00	METAL CHIP	10K	5%	1/10W
R726	1-208-793-11	METAL GLAZE	3K	0.50%	1/10W
R727	1-208-782-11	METAL GLAZE	1K	0.50%	1/10W
R728	1-216-073-00	METAL CHIP	10K	5%	1/10W
R801	1-216-109-00	METAL CHIP	330K	5%	1/10W
R803	1-216-057-00	METAL CHIP	2.2K	5%	1/10W
R804	1-216-073-00	METAL CHIP	10K	5%	1/10W
R805	1-216-073-00	METAL CHIP	10K	5%	1/10W
R806	1-216-073-00	METAL CHIP	10K	5%	1/10W
R807	1-216-073-00	METAL CHIP	10K	5%	1/10W
R808	1-216-073-00	METAL CHIP	10K	5%	1/10W
R809	1-216-073-00	METAL CHIP	10K	5%	1/10W
R811	1-216-017-91	METAL GLAZE	47	5%	1/10W
R812	1-216-113-00	METAL CHIP	470K	5%	1/10W
R813	1-216-041-00	METAL CHIP	470	5%	1/10W
R814	1-216-095-00	METAL CHIP	82K	5%	1/10W
R818	1-216-041-00	METAL CHIP	470	5%	1/10W
R819	1-216-089-91	METAL GLAZE	47K	5%	1/10W
R822	1-216-041-00	METAL CHIP	470	5%	1/10W
R823	1-216-041-00	METAL CHIP	470	5%	1/10W
R826	1-216-041-00	METAL CHIP	470	5%	1/10W
R827	1-216-049-00	METAL CHIP	1K	5%	1/10W
R828	1-216-041-00	METAL CHIP	470	5%	1/10W
R829	1-216-041-00	METAL CHIP	470	5%	1/10W
R830	1-216-041-00	METAL CHIP	470	5%	1/10W

Ref. No.	Part No.	Description			Remarks
R831	1-216-041-00	METAL CHIP	470	5%	1/10W
R832	1-216-041-00	METAL CHIP	470	5%	1/10W
R855	1-216-295-00	METAL CHIP	0	5%	1/10W
R857	1-216-089-91	METAL GLAZE	47K	5%	1/10W
R859	1-216-089-91	METAL GLAZE	47K	5%	1/10W
R861	1-216-049-00	METAL CHIP	1K	5%	1/10W
R862	1-216-075-00	METAL CHIP	12K	5%	1/10W
				(AS,B,MN,NP,NR,VC)	
R863	1-216-071-00	METAL CHIP	8.2K	5%	1/10W
R901	1-216-055-00	METAL CHIP	1.8K	5%	1/10W
R902	1-216-055-00	METAL CHIP	1.8K	5%	1/10W
R904	1-216-295-00	METAL CHIP	0	5%	1/10W
R905	1-216-295-00	METAL CHIP	0	5%	1/10W
R920	1-216-085-00	METAL CHIP	33K	5%	1/10W
R921	1-216-077-00	METAL CHIP	15K	5%	1/10W
R922	1-216-089-91	METAL GLAZE	47K	5%	1/10W
R923	1-216-089-91	METAL GLAZE	47K	5%	1/10W
R924	1-216-061-00	METAL CHIP	3.3K	5%	1/10W
R925	1-216-053-00	METAL CHIP	1.5K	5%	1/10W
R926	1-216-035-00	METAL CHIP	270	5%	1/10W
R928	1-216-035-00	METAL CHIP	270	5%	1/10W
R930	1-216-035-00	METAL CHIP	270	5%	1/10W
R931	1-216-295-00	METAL CHIP	0	5%	1/10W
R932	1-216-101-00	METAL CHIP	150K	5%	1/10W
R933	1-216-043-91	METAL GLAZE	560	5%	1/10W
R934	1-216-063-91	METAL GLAZE	3.9K	5%	1/10W
R951	1-216-041-00	METAL CHIP	470	5%	1/10W
R952	1-216-037-00	METAL CHIP	330	5%	1/10W
R953	1-216-021-00	METAL CHIP	68	5%	1/10W
R958	1-216-041-00	METAL CHIP	470	5%	1/10W
R959	1-216-041-00	METAL CHIP	470	5%	1/10W
R960	1-216-021-00	METAL CHIP	68	5%	1/10W
R965	1-216-041-00	METAL CHIP	470	5%	1/10W
R966	1-216-041-00	METAL CHIP	470	5%	1/10W
R967	1-216-021-00	METAL CHIP	68	5%	1/10W
R970	1-216-081-00	METAL CHIP	22K	5%	1/10W
R971	1-216-081-00	METAL CHIP	22K	5%	1/10W
R972	1-216-073-00	METAL CHIP	10K	5%	1/10W
R979	1-216-041-00	METAL CHIP	470	5%	1/10W
R980	1-216-041-00	METAL CHIP	470	5%	1/10W
R982	1-216-073-00	METAL CHIP	0K	5%	1/10W
					(B)
R983	1-216-073-00	METAL CHIP	10K	5%	1/10W
					(B)
R984	1-216-033-00	METAL CHIP	220	5%	1/10W
R987	1-216-041-00	METAL CHIP	470	5%	1/10W
R990	1-216-041-00	METAL CHIP	470	5%	1/10W
R991	1-216-295-00	METAL CHIP	0	5%	1/10W
R992	1-216-295-00	METAL CHIP	0	5%	1/10W
R993	1-216-295-00	METAL CHIP	0	5%	1/10W
		< MODULATOR >			
RFU501	1-467-958-31	MODULATOR, RF (RFU-2100)			
		< VARIABLE RESISTOR >			
RV601	1-238-855-11	RES, ADJ, CERMET 4.7K			
RV602	1-238-856-11	RES, ADJ, CERMET 10K			
RV603	1-238-855-11	RES, ADJ, CERMET 4.7K			

Ref. No.	Part No.	Description			Remarks
		< SWITCH >			
S251	1-570-953-11	SWITCH, PUSH (1 KEY) (CASSTTE IN/REC PROOF)			
		< TRANSFORMER >			
T651	1-423-413-11	TRANSFORMER, BIAS OSCILLATION			
T652	1-423-415-11	TRANSFORMER, BIAS OSCILLATION			
		< TUNER >			
TU501	1-693-364-11	TUNER, (IF) SOLID TYPE (B)			
TU501	1-693-366-11	TUNER, (IF) SOLID TYPE (UX)			
TU501	1-693-367-11	TUNER, (IF) SOLID TYPE (MN,NP,NR)			
TU501	1-693-368-11	TUNER, (IF) SOLID TYPE (AS,VC)			
		< VIBRATOR >			
X201	1-760-239-11	VIBRATOR, CRYSTAL 16MHz			
X801	1-579-436-11	VIBLATOR, CRYSTAL 32.768kHz			
X802	1-760-239-11	VIBRATOR, CRYSTAL 16MHz			
X901	1-577-289-11	VIBRATOR, CRYSTAL 17.734475MHz			
X902	1-577-165-11	VIBLATOR, CERAMIC 500kHz			
*	A-7073-108-A	PS-380 BOARD, COMPLETE ********** (Ref.No.: 6,000 Series)			
	7-682-548-04	SCREW +P 3X8			
	7-685-646-79	SCREW +BVTP 3X8 TYPE2 IT-3			
		< CAPACITOR >			
⚠C301	1-104-706-11	FILM	0.22uF	20%	250V
⚠C302	1-104-705-11	FILM	0.1uF	20%	250V
⚠C303	1-113-915-11	CERAMIC	0.001uF	20%	250V
⚠C304	1-113-915-11	CERAMIC	0.001uF	20%	250V
⚠C305	1-113-915-11	CERAMIC	0.001uF	20%	250V
⚠C306	1-113-915-11	CERAMIC	0.001uF	20%	250V
⚠C308	1-111-266-11	ELECT(SOLID)	100uF	20%	400V
⚠C317	1-113-915-11	CERAMIC	0.001uF	20%	250V
C412	1-126-933-11	ELECT	100uF	20%	16V
C414	1-126-767-11	ELECT	1000uF	20%	16V
C415	1-126-926-11	ELECT	1000uF	20%	10V
C416	1-126-964-11	ELECT	10uF	20%	50V
		< CONNECTOR >			
CN401	1-506-477-11	PIN, CONNECTOR 12P			
CN402	1-506-480-11	PIN, CONNECTOR 15P			
		< JACK >			
⚠CNJ301	1-251-134-11	INLET, AC (NONPOLAR)(AC IN)			
		< CONPOSITION CIRCUIT BLOCK >			
⚠CP401	1-468-034-21	POWER BLOCK			
		< DIODE >			
⚠D301	8-719-510-51	DIODE D3SB60F			
D412	8-719-110-23	DIODE RD11ES-B3			

Note : The components identified by mark ⚠ or dotted line with mark ⚠ are critical for safety. Replace only with part number specified.

Ref. No.	Part No.	Description			Remarks
		< FUSE >			
⚠F301	1-532-203-00	FUSE			
		< FUSE HOLDER >			
FH301	1-533-223-11	HOLDER, FUSE			
FH302	1-533-223-11	HOLDER, FUSE			
		< IC >			
IC402	8-759-513-71	IC PQ05RF21			
		< COIL >			
L401	1-411-880-21	COIL, CHOKE 47uH			
L403	1-411-878-21	COIL, CHOKE 10uH			
L404	1-406-659-11	COIL, CHOKE 10uH			
		< LINE FILTER >			
⚠LF301	1-403-599-11	FILTER, LINE 33MH			
⚠LF302	1-403-599-11	FILTER, LINE 33MH			
		< IC LINK >			
⚠PS401	1-532-984-11	LINK, IC			
⚠PS410	1-532-605-00	LINK, IC 0.4A			
		< RESISTOR >			
⚠R301	1-202-724-00	SOLID	2.7M	10%	1/2W
⚠R305	1-217-294-00	WIREWOUND	4.7	10%	5W F
R404	1-216-089-91	METAL GLAZE	47K	5%	1/10W
R405	1-216-295-00	METAL CHIP	0	5%	1/10W
*	A-7066-885-A	RP-211 (T) BOARD, COMPLETE			
		**********			
		(Ref.No.: 1,000 Series)			
		< CAPACITOR >			
C102	1-164-004-11	CERAMIC CHIP	0.1uF	10%	25V
C103	1-162-927-11	CERAMIC CHIP	100PF	5%	50V
C104	1-162-926-11	CERAMIC CHIP	82PF	5%	50V
C105	1-164-217-11	CERAMIC CHIP	150PF	5%	50V
C106	1-162-927-11	CERAMIC CHIP	100PF	5%	50V
C108	1-162-911-11	CERAMIC CHIP	6PF	0.5PF	50V
C109	1-162-970-11	CERAMIC CHIP	0.01uF	10%	25V
C110	1-162-970-11	CERAMIC CHIP	0.01uF	10%	25V
C111	1-164-227-11	CERAMIC CHIP	0.022uF	10%	25V
C112	1-164-227-11	CERAMIC CHIP	0.022uF	10%	25V
C113	1-162-970-11	CERAMIC CHIP	0.01uF	10%	25V
C114	1-164-156-11	CERAMIC CHIP	0.1uF		25V
C115	1-162-970-11	CERAMIC CHIP	0.01uF	10%	25V
C116	1-164-156-11	CERAMIC CHIP	0.1uF		25V
C117	1-104-852-11	TANTAL. CHIP	22uF	20%	6.3V
C118	1-104-852-11	TANTAL. CHIP	22uF	20%	6.3V
C119	1-162-959-11	CERAMIC CHIP	330PF	5%	50V
C120	1-162-970-11	CERAMIC CHIP	0.01uF	10%	25V
C122	1-135-259-11	TANTAL. CHIP	10uF	20%	6.3V
C123	1-162-959-11	CERAMIC CHIP	330PF	5%	50V
C127	1-162-970-11	CERAMIC CHIP	0.01uF	10%	25V
C128	1-162-970-11	CERAMIC CHIP	0.01uF	10%	25V
C129	1-135-259-11	TANTAL. CHIP	10uF	20%	6.3V
C130	1-162-970-11	CERAMIC CHIP	0.01uF	10%	25V
C132	1-162-970-11	CERAMIC CHIP	0.01uF	10%	25V

Ref. No.	Part No.	Description			Remarks
C133	1-162-970-11	CERAMIC CHIP	0.01uF	10%	25V
C134	1-162-964-11	CERAMIC CHIP	0.001uF	10%	50V
C135	1-162-970-11	CERAMIC CHIP	0.01uF	10%	25V
C136	1-162-970-11	CERAMIC CHIP	0.01uF	10%	25V
C137	1-162-970-11	CERAMIC CHIP	0.01uF	10%	25V
C138	1-164-004-11	CERAMIC CHIP	0.1uF	10%	25V
C139	1-162-968-11	CERAMIC CHIP	0.0047uF	10%	50V
C141	1-104-852-11	TANTAL. CHIP	22uF	20%	6.3V
C142	1-164-156-11	CERAMIC CHIP	0.1uF		25V
C143	1-162-970-11	CERAMIC CHIP	0.01uF	10%	25V
		< CONNECTOR >			
CN101	1-766-341-21	CONNECTOR, FFC/FPC 11P			
CN102	1-770-700-11	CONNECTOR, FFC/FPC 17P			
CN301	1-766-340-21	CONNECTOR, FFC/FPC 10P			
CN302	1-770-690-11	CONNECTOR, FFC/FPC 7P			
		< DIODE >			
D101	8-719-059-51	DIODE MA3J142E0LSO			
		< IC >			
IC101	8-752-069-78	IC CXA1704R-T4			
		< COIL >			
L101	1-412-066-21	INDUCTOR CHIP	220uH		
L102	1-412-951-11	INDUCTOR	10uH		
L103	1-412-066-21	INDUCTOR CHIP	220uH		
L104	1-412-066-21	INDUCTOR CHIP	220uH		
L106	1-412-060-11	INDUCTOR CHIP	22uH		
		< TRANSISTOR >			
Q101	8-729-420-24	TRANSISTOR 2SB1218A-QRS			
Q102	8-729-420-24	TRANSISTOR 2SB1218A-QRS			
Q103	8-729-420-24	TRANSISTOR 2SB1218A-QRS			
Q104	8-729-402-42	TRANSISTOR UN5213			
Q105	8-729-402-42	TRANSISTOR UN5213			
Q106	8-729-012-50	TRANSISTOR 2SC4400-3/4/5			
Q107	8-729-230-63	TRANSISTOR 2SC4116-YG			
Q108	8-729-230-63	TRANSISTOR 2SC4116-YG			
Q109	8-729-402-42	TRANSISTOR UN5213			
		< RESISTOR >			
R101	1-216-839-11	METAL CHIP	33K	5%	1/16W
R102	1-216-837-11	METAL CHIP	22K	5%	1/16W
R103	1-216-813-11	METAL CHIP	220	5%	1/16W
R104	1-216-814-11	METAL CHIP	270	5%	1/16W
R105	1-216-829-11	METAL CHIP	4.7K	5%	1/16W
R106	1-216-825-11	METAL CHIP	2.2K	5%	1/16W
R107	1-216-864-11	METAL CHIP	0	5%	1/16W
R108	1-216-864-11	METAL CHIP	0	5%	1/16W
R109	1-216-840-11	METAL CHIP	39K	5%	1/16W
R110	1-216-825-11	METAL CHIP	2.2K	5%	1/16W
R111	1-216-807-11	METAL CHIP	68	5%	1/16W
R112	1-216-864-11	METAL CHIP	0	5%	1/16W
R113	1-216-840-11	METAL CHIP	39K	5%	1/16W
R114	1-216-825-11	METAL CHIP	2.2K	5%	1/16W
R115	1-216-827-11	METAL CHIP	3.3K	5%	1/16W

Note : The components identified by mark ⚠ or dotted line with mark ⚠ are critical for safety. Replace only with part number specified.

Ref. No.	Part No.	Description			Remarks
R116	1-216-818-11	METAL CHIP	560	5%	1/16W
R117	1-216-805-11	METAL CHIP	47	5%	1/16W
R118	1-216-815-11	METAL CHIP	330	5%	1/16W
R119	1-216-815-11	METAL CHIP	330	5%	1/16W
R120	1-216-833-11	METAL CHIP	10K	5%	1/16W
R121	1-216-834-11	METAL CHIP	12K	5%	1/16W
R122	1-218-875-11	METAL GLAZE	15K	0.50%	1/16W
R123	1-216-836-11	METAL CHIP	18K	5%	1/16W
R124	1-216-833-11	METAL CHIP	10K	5%	1/16W
R125	1-216-827-11	METAL CHIP	3.3K	5%	1/16W
R130	1-216-834-11	METAL CHIP	12K	5%	1/16W
R131	1-216-839-11	METAL CHIP	33K	5%	1/16W
R132	1-216-815-11	METAL CHIP	330	5%	1/16W
R133	1-216-818-11	METAL CHIP	560	5%	1/16W
R135	1-216-864-11	METAL CHIP	0	5%	1/16W
R136	1-216-821-11	METAL CHIP	1K	5%	1/16W
R138	1-218-891-11	METAL GLAZE	68K	0.50%	1/16W
R139	1-218-897-11	METAL GLAZE	120K	0.50%	1/16W
R140	1-218-897-11	METAL GLAZE	120K	0.50%	1/16W
R141	1-218-915-11	METAL GLAZE	680K	0.50%	1/16W
R142	1-216-853-11	METAL CHIP	470K	5%	1/16W
R143	1-218-871-11	METAL GLAZE	10K	0.50%	1/16W
R144	1-218-857-11	METAL GLAZE	2.7K	0.50%	1/16W
R145	1-216-817-11	METAL CHIP	470	5%	1/16W
R146	1-216-805-11	METAL CHIP	47	5%	1/16W

* A-7066-978-A RV-50 (P) BOARD, COMPLETE
****
(AS,MN,NP,NR,UX,VC)

* A-7066-999-A RV-50 (B) BOARD, COMPLETE (B)
****
(Ref.No.: 3,000 Series)

* 3-957-421-11 HOLDER, SECAM IC (B)

< CAPACITOR >

C002	1-163-033-91	CERAMIC CHIP	0.022uF		50V
C003	1-163-237-11	CERAMIC CHIP	27PF	5%	50V
C005	1-163-033-91	CERAMIC CHIP	0.022uF		50V
C006	1-163-237-11	CERAMIC CHIP	27PF	5%	50V
C007	1-163-033-91	CERAMIC CHIP	0.022uF		50V
C008	1-163-033-91	CERAMIC CHIP	0.022uF		50V
C009	1-163-235-11	CERAMIC CHIP	22PF	5%	50V
C010	1-163-235-11	CERAMIC CHIP	22PF	5%	50V
C011	1-163-033-91	CERAMIC CHIP	0.022uF		50V
C012	1-163-033-91	CERAMIC CHIP	0.022uF		50V
C013	1-163-033-91	CERAMIC CHIP	0.022uF		50V
C014	1-163-033-91	CERAMIC CHIP	0.022uF		50V
C015	1-163-033-91	CERAMIC CHIP	0.022uF		50V
C016	1-163-033-91	CERAMIC CHIP	0.022uF		50V
C021	1-126-154-11	ELECT	47uF	20%	6.3V
C022	1-163-038-00	CERAMIC CHIP	0.1uF		25V
C023	1-163-038-00	CERAMIC CHIP	0.1uF		25V
C024	1-164-232-11	CERAMIC CHIP	0.01uF		50V
C025	1-163-038-00	CERAMIC CHIP	0.1uF		25V
C026	1-163-038-00	CERAMIC CHIP	0.1uF		25V
C027	1-164-232-11	CERAMIC CHIP	0.01uF		50V
C028	1-163-263-11	CERAMIC CHIP	330PF	5%	50V(B)
C029	1-163-127-00	CERAMIC CHIP	270PF	5%	50V
C030	1-163-239-11	CERAMIC CHIP	33PF	5%	50V
C031	1-163-239-11	CERAMIC CHIP	33PF	5%	50V
C032	1-126-154-11	ELECT	47uF	20%	6.3V
C033	1-163-038-00	CERAMIC CHIP	0.1uF		25V
C041	1-164-232-11	CERAMIC CHIP	0.01uF		50V
C046	1-163-227-11	CERAMIC CHIP	10PF	0.5PF	50V
C047	1-163-227-11	CERAMIC CHIP	10PF	0.5PF	50V
C051	1-164-232-11	CERAMIC CHIP	0.01uF		50V
C052	1-126-933-11	ELECT	100uF	20%	10V
C053	1-164-232-11	CERAMIC CHIP	0.01uF		50V
C054	1-126-961-11	ELECT	2.2uF	20%	50V
C055	1-164-232-11	CERAMIC CHIP	0.01uF		50V
C056	1-126-960-11	ELECT	1uF	20%	50V
C057	1-164-232-11	CERAMIC CHIP	0.01uF		50V
C058	1-163-135-00	CERAMIC CHIP	560PF	5%	50V
C059	1-163-038-00	CERAMIC CHIP	0.1uF		25V
C060	1-164-232-11	CERAMIC CHIP	0.01uF		50V
C061	1-163-038-00	CERAMIC CHIP	0.1uF		25V
C062	1-164-232-11	CERAMIC CHIP	0.01uF		50V
C063	1-163-038-00	CERAMIC CHIP	0.1uF		25V
C064	1-163-135-00	CERAMIC CHIP	560PF	5%	50V
C351	1-164-232-11	CERAMIC CHIP	0.01uF		50V
C352	1-163-237-11	CERAMIC CHIP	27PF	5%	50V
C353	1-164-232-11	CERAMIC CHIP	0.01uF		50V
C354	1-126-967-11	ELECT	47uF	20%	10V
C355	1-126-967-11	ELECT	47uF	20%	10V
C356	1-164-232-11	CERAMIC CHIP	0.01uF		50V
C357	1-126-967-11	ELECT	47uF	20%	10V
C371	1-128-551-11	ELECT	22uF	20%	25V
C401	1-164-232-11	CERAMIC CHIP	0.01uF		50V(B)
C403	1-126-967-11	ELECT	47uF	20%	10V(B)
C405	1-164-232-11	CERAMIC CHIP	0.01uF		50V(B)
C451	1-126-967-11	ELECT	47uF	20%	10V(B)
C453	1-124-287-00	ELECT	10uF	20%	10V(B)
C501	1-216-295-00	METAL CHIP	0	5%	1/10W
C502	1-164-232-11	CERAMIC CHIP	0.01uF		50V
C503	1-164-232-11	CERAMIC CHIP	0.01uF		50V
C504	1-163-037-11	CERAMIC CHIP	0.022uF	10%	25V
C505	1-104-760-11	CERAMIC CHIP	0.047uF	10%	50V
C506	1-164-004-11	CERAMIC CHIP	0.1uF	10%	25V
C507	1-164-232-11	CERAMIC CHIP	0.01uF		50V
C508	1-109-982-11	CERAMIC CHIP	1uF	10%	10V
C509	1-164-232-11	CERAMIC CHIP	0.01uF		50V
C510	1-126-964-11	ELECT	10uF	20%	50V
C511	1-164-232-11	CERAMIC CHIP	0.01uF		50V
C512	1-164-232-11	CERAMIC CHIP	0.01uF		50V
C513	1-109-982-11	CERAMIC CHIP	1uF	10%	10V
C514	1-109-982-11	CERAMIC CHIP	1uF	10%	10V
C515	1-163-139-00	CERAMIC CHIP	820PF	5%	50V
C517	1-164-232-11	CERAMIC CHIP	0.01uF		50V
C518	1-163-038-00	CERAMIC CHIP	0.1uF		25V
C519	1-126-097-51	ELECT	15uF	20%	35V
C521	1-164-232-11	CERAMIC CHIP	0.01uF		50V
C522	1-104-760-11	CERAMIC CHIP	0.047uF	10%	50V
C523	1-109-982-11	CERAMIC CHIP	1uF	10%	10V
C524	1-164-346-11	CERAMIC CHIP	1uF		16V
C526	1-126-964-11	ELECT	10uF	20%	50V

Ref. No.	Part No.	Description			Remarks
C528	1-165-321-11	CERAMIC CHIP	0.68uF	10%	16V
C529	1-164-232-11	CERAMIC CHIP	0.01uF		50V
C530	1-164-232-11	CERAMIC CHIP	0.01uF		50V
C531	1-164-346-11	CERAMIC CHIP	1uF		16V
C532	1-164-346-11	CERAMIC CHIP	1uF		16V
C534	1-163-038-00	CERAMIC CHIP	0.1uF		25V
C536	1-164-232-11	CERAMIC CHIP	0.01uF		50V
C538	1-163-037-11	CERAMIC CHIP	0.022uF	10%	25V
C541	1-164-004-11	CERAMIC CHIP	0.1uF	10%	25V
C542	1-163-037-11	CERAMIC CHIP	0.022uF	10%	25V
C546	1-163-263-11	CERAMIC CHIP	330PF	5%	50V
C547	1-163-239-11	CERAMIC CHIP	33PF	5%	50V
C550	1-164-004-11	CERAMIC CHIP	0.1uF	10%	25V
C551	1-164-232-11	CERAMIC CHIP	0.01uF		50V
C552	1-164-232-11	CERAMIC CHIP	0.01uF		50V
C562	1-164-004-11	CERAMIC CHIP	0.1uF	10%	25V
C563	1-163-251-11	CERAMIC CHIP	100PF	5%	50V
C564	1-164-232-11	CERAMIC CHIP	0.01uF		50V
C565	1-164-182-11	CERAMIC CHIP	0.0033uF	10%	50V(B)
C570	1-163-035-00	CERAMIC CHIP	0.047uF		50V
C591	1-163-222-11	CERAMIC CHIP	5PF	0.25PF	50V
C610	1-164-232-11	CERAMIC CHIP	0.01uF		50V
C612	1-164-232-11	CERAMIC CHIP	0.01uF		50V
C901	1-164-232-11	CERAMIC CHIP	0.01uF		50V
C902	1-126-967-11	ELECT	47uF	20%	10V
C903	1-124-290-00	ELECT	47uF	20%	6.3V
C904	1-126-967-11	ELECT	47uF	20%	10V
C905	1-126-967-11	ELECT	47uF	20%	10V
C910	1-164-232-11	CERAMIC CHIP	0.01uF		50V
C911	1-163-227-11	CERAMIC CHIP	10PF	0.5PF	50V
C912	1-163-257-11	CERAMIC CHIP	180PF	5%	50V
C913	1-163-243-11	CERAMIC CHIP	47PF	5%	50V
C921	1-163-235-11	CERAMIC CHIP	22PF	5%	50V
C922	1-163-239-11	CERAMIC CHIP	33PF	5%	50V
C923	1-163-251-11	CERAMIC CHIP	100PF	5%	50V
C924	1-163-127-00	CERAMIC CHIP	270PF	5%	50V (AS,MN,NP,NR,UX,VC)
C924	1-163-251-11	CERAMIC CHIP	100PF	5%	50V(B)
C925	1-216-295-00	METAL CHIP	0	5%	1/10W
C926	1-164-232-11	CERAMIC CHIP	0.01uF		50V
C927	1-163-237-11	CERAMIC CHIP	27PF	5%	50V
C928	1-164-232-11	CERAMIC CHIP	0.01uF		50V
C932	1-163-237-11	CERAMIC CHIP	27PF	5%	50V
C933	1-216-295-00	METAL CHIP	0	5%	1/10W
C935	1-164-232-11	CERAMIC CHIP	0.01uF		50V
C936	1-163-009-11	CERAMIC CHIP	0.001uF	10%	50V
C937	1-164-232-11	CERAMIC CHIP	0.01uF		50V
C938	1-164-232-11	CERAMIC CHIP	0.01uF		50V
C939	1-164-232-11	CERAMIC CHIP	0.01uF		50V
C940	1-164-004-11	CERAMIC CHIP	0.1uF	10%	25V
C941	1-164-232-11	CERAMIC CHIP	0.01uF		50V
C942	1-164-232-11	CERAMIC CHIP	0.01uF		50V
C946	1-126-967-11	ELECT	47uF	20%	10V
C947	1-164-232-11	CERAMIC CHIP	0.01uF		50V
C952	1-164-232-11	CERAMIC CHIP	0.01uF		50V
C956	1-104-760-11	CERAMIC CHIP	0.047uF	10%	50V
C957	1-164-232-11	CERAMIC CHIP	0.01uF		50V

Ref. No.	Part No.	Description			Remarks
C958	1-216-295-00	METAL CHIP	0	5%	1/10W
C961	1-164-232-11	CERAMIC CHIP	0.01uF		50V
C971	1-163-239-11	CERAMIC CHIP	33PF	5%	50V
C972	1-163-259-91	CERAMIC CHIP	220PF	5%	50V(B)
C985	1-163-227-11	CERAMIC CHIP	10PF	0.5PF	50V
C986	1-163-231-11	CERAMIC CHIP	15PF	5%	50V
C987	1-163-035-00	CERAMIC CHIP	0.047uF		50V
C988	1-164-232-11	CERAMIC CHIP	0.01uF		50V
C989	1-163-035-00	CERAMIC CHIP	0.047uF		50V
C990	1-164-346-11	CERAMIC CHIP	1uF		16V
C991	1-164-346-11	CERAMIC CHIP	1uF		16V
C992	1-164-232-11	CERAMIC CHIP	0.01uF		50V
C993	1-164-232-11	CERAMIC CHIP	0.01uF		50V
		< CONNECTOR >			
CN001	1-766-986-11	CONNECTOR, FFC/FPC 13P			
* CN002	1-564-029-00	PIN, CONNECTOR 4P			
CN901	1-573-834-11	CONNECTOR, BOARD TO BOARD 20P			
CN902	1-573-834-11	CONNECTOR, BOARD TO BOARD 20P			
		< DIODE >			
D501	8-719-404-49	DIODE MA111			
D503	8-719-404-49	DIODE MA111			
D505	8-719-404-49	DIODE MA111			
D506	8-719-801-78	DIODE 1SS184			
D951	8-719-800-76	DIODE 1SS226			
		< IC >			
IC001	8-759-352-17	IC HA118195NT			
IC051	8-759-055-49	IC AN3327K			
IC401	8-759-333-99	IC LA7356M (B)			
IC451	1-809-959-12	IC TME656 (B)			
IC501	8-759-349-60	IC LA7438AM-N-MPB			
IC502	8-752-373-18	IC CXL1511M-T6			
IC931	8-759-352-18	IC M52374SP			
		< COIL >			
L021	1-410-482-31	INDUCTOR	100uH		
L022	1-410-391-11	INDUCTOR CHIP	68uH (B)		
L023	1-410-482-31	INDUCTOR	100uH		
L024	1-410-658-31	INDUCTOR CHIP	220uH		
L051	1-410-482-31	INDUCTOR	100uH		
L351	1-410-389-31	INDUCTOR CHIP	47uH		
L401	1-414-398-11	INDUCTOR	10uH (B)		
L502	1-410-388-31	INDUCTOR CHIP	39uH		
L503	1-410-388-31	INDUCTOR CHIP	39uH		
L504	1-410-388-31	INDUCTOR CHIP	39uH		
L505	1-410-387-11	INDUCTOR CHIP	33uH (B)		
L901	1-410-470-11	INDUCTOR	10uH		
L902	1-414-398-11	INDUCTOR	10uH		
L903	1-410-470-11	INDUCTOR	10uH		
L911	1-410-655-31	INDUCTOR CHIP	120uH		
L921	1-410-385-11	INDUCTOR CHIP	22uH		
L922	1-410-657-21	INDUCTOR CHIP	180uH (B)		
L922	1-410-658-31	INDUCTOR CHIP	220uH (AS,MN,NP,NR,UX,VC)		
L931	1-410-482-31	INDUCTOR	100uH		
L933	1-410-390-11	INDUCTOR CHIP	56uH		
L952	1-412-282-41	INDUCTOR	470uH		
L971	1-410-380-31	INDUCTOR CHIP	8.2uH		

RV-50

Ref. No.	Part No.	Description	Remarks
		< TRANSISTOR >	
Q021	8-729-216-21	TRANSISTOR 2SA1162Y-TE85L	
Q022	8-729-230-49	TRANSISTOR 2SC2712-YG	
Q093	8-729-421-19	TRANSISTOR UN2213 (B)	
Q094	8-729-421-19	TRANSISTOR UN2213 (B)	
Q095	8-729-421-19	TRANSISTOR UN2213 (B)	
Q351	8-729-421-19	TRANSISTOR UN2213	
Q352	8-729-230-49	TRANSISTOR 2SC2712-YG	
Q353	8-729-230-49	TRANSISTOR 2SC2712-YG	
Q371	8-729-230-49	TRANSISTOR 2SC2712-YG	
Q503	8-729-421-19	TRANSISTOR UN2213	
Q504	8-729-421-19	TRANSISTOR UN2213	
Q505	8-729-230-49	TRANSISTOR 2SC2712-YG	
Q506	8-729-424-08	TRANSISTOR UN2111	
Q507	8-729-216-21	TRANSISTOR 2SA1162Y-TE85L	
Q508	8-729-230-49	TRANSISTOR 2SC2712-YG	
Q509	8-729-424-56	TRANSISTOR UN211L	
Q514	8-729-230-49	TRANSISTOR 2SC2712-YG	
Q515	8-729-421-19	TRANSISTOR UN2213	
Q518	8-729-230-49	TRANSISTOR 2SC2712-YG	
Q520	8-729-421-19	TRANSISTOR UN2213 (B)	
Q525	8-729-421-19	TRANSISTOR UN2213	
Q610	8-729-230-49	TRANSISTOR 2SC2712-YG	
Q901	8-729-421-19	TRANSISTOR UN2213	
Q912	8-729-421-19	TRANSISTOR UN2213	
Q921	8-729-230-49	TRANSISTOR 2SC2712-YG	
Q922	8-729-230-49	TRANSISTOR 2SC2712-YG	
Q932	8-729-230-49	TRANSISTOR 2SC2712-YG	
Q951	8-729-421-19	TRANSISTOR UN2213	
Q952	8-729-230-49	TRANSISTOR 2SC2712-YG	
Q957	8-729-230-49	TRANSISTOR 2SC2712-YG	
Q991	8-729-216-21	TRANSISTOR 2SA1162Y-TE85L	
		< RESISTOR >	
R001	1-216-035-00	METAL CHIP 270 5% 1/10W	
R002	1-216-035-00	METAL CHIP 270 5% 1/10W	
R003	1-216-295-00	METAL CHIP 0 5% 1/10W	
R004	1-216-295-00	METAL CHIP 0 5% 1/10W	
R005	1-216-295-00	METAL CHIP 0 5% 1/10W	
R008	1-216-295-00	METAL CHIP 0 5% 1/10W	
R021	1-216-295-00	METAL CHIP 0 5% 1/10W	
R022	1-216-049-00	METAL CHIP 1K 5% 1/10W	
R023	1-216-655-11	METAL CHIP 1.5K 0.5% 1/10W	
R024	1-216-049-00	METAL CHIP 1K 5% 1/10W	
R025	1-216-059-00	METAL CHIP 2.7K 5% 1/10W	
R026	1-216-057-00	METAL CHIP 2.2K 5% 1/10W	
R027	1-216-073-00	METAL CHIP 10K 5% 1/10W	
R028	1-216-057-00	METAL CHIP 2.2K 5% 1/10W	
R029	1-216-075-00	METAL CHIP 12K 5% 1/10W	
R030	1-216-081-00	METAL CHIP 22K 5% 1/10W	
R031	1-216-081-00	METAL CHIP 22K 5% 1/10W	
R032	1-216-075-00	METAL CHIP 12K 5% 1/10W	
R033	1-216-081-00	METAL CHIP 22K 5% 1/10W	
R041	1-216-057-00	METAL CHIP 2.2K 5% 1/10W	
R048	1-216-295-00	METAL CHIP 0 5% 1/10W	
R051	1-216-067-00	METAL CHIP 5.6K 5% 1/10W	
R052	1-216-051-00	METAL CHIP 1.2K 5% 1/10W	
R053	1-216-073-00	METAL CHIP 10K 5% 1/10W	
R054	1-216-681-11	METAL CHIP 18K 0.5% 1/10W	

Ref. No.	Part No.	Description			Remarks
R056	1-216-097-91	METAL GLAZE	100K	5%	1/10W
R057	1-216-035-00	METAL CHIP	270	5%	1/10W
R058	1-216-033-00	METAL CHIP	220	5%	1/10W
R059	1-216-035-00	METAL CHIP	270	5%	1/10W
R061	1-216-073-00	METAL CHIP	10K	5%	1/10W
R062	1-216-097-91	METAL GLAZE	100K	5%	1/10W
R097	1-216-295-00	METAL CHIP	0	5%	1/10W
R304	1-216-295-00	METAL CHIP	0	5%	1/10W
R351	1-216-041-00	METAL CHIP	470	5%	1/10W
R352	1-216-045-00	METAL CHIP	680	5%	1/10W
R353	1-216-041-00	METAL CHIP	470	5%	1/10W
R354	1-216-049-00	METAL CHIP	1K	5%	1/10W
R355	1-216-049-00	METAL CHIP	1K	5%	1/10W
R356	1-216-075-00	METAL CHIP	12K	5%	1/10W
R357	1-216-073-00	METAL CHIP	10K	5%	1/10W
R358	1-216-035-00	METAL CHIP	270	5%	1/10W
R359	1-216-049-00	METAL CHIP	1K	5%	1/10W
R371	1-216-295-00	METAL CHIP	0	5%	1/10W
R373	1-216-089-91	METAL GLAZE	47K	5%	1/10W
R401	1-216-295-00	METAL CHIP	0	5%	1/10W (B)
R403	1-216-053-00	METAL CHIP	1.5K	5%	1/10W (B)
R404	1-216-067-00	METAL CHIP	5.6K	5%	1/10W (B)
R451	1-216-057-00	METAL CHIP	2.2K	5%	1/10W (B)
R501	1-216-073-00	METAL CHIP	10K	5%	1/10W
R502	1-216-073-00	METAL CHIP	10K	5%	1/10W
R503	1-208-784-11	METAL GLAZE	1.2K	0.50%	1/10W
R504	1-208-790-11	METAL GLAZE	2.2K	0.50%	1/10W
R505	1-208-784-11	METAL GLAZE	1.2K	0.50%	1/10W
R506	1-216-053-00	METAL CHIP	1.5K	5%	1/10W
R507	1-216-077-00	METAL CHIP	15K	5%	1/10W
R510	1-216-049-00	METAL CHIP	1K	5%	1/10W
R511	1-216-049-00	METAL CHIP	1K	5%	1/10W
R512	1-216-081-00	METAL CHIP	22K	5%	1/10W
R513	1-216-053-00	METAL CHIP	1.5K	5%	1/10W
R515	1-216-052-00	METAL CHIP	1.3K	5%	1/10W
R518	1-216-036-00	METAL CHIP	300	5%	1/10W
R527	1-216-071-00	METAL CHIP	8.2K	5%	1/10W
R532	1-216-055-00	METAL CHIP	1.8K	5%	1/10W
R533	1-216-057-00	METAL CHIP	2.2K	5%	1/10W
R535	1-216-073-00	METAL CHIP	10K	5%	1/10W
R536	1-216-073-00	METAL CHIP	10K	5%	1/10W
R538	1-216-095-00	METAL CHIP	82K	5%	1/10W
R539	1-216-049-00	METAL CHIP	1K	5%	1/10W
R555	1-216-121-91	METAL GLAZE	1M	5%	1/10W
R558	1-216-041-00	METAL CHIP	470	5%	1/10W
R559	1-216-053-00	METAL CHIP	1.5K	5%	1/10W
R560	1-216-041-00	METAL CHIP	470	5%	1/10W
R568	1-216-089-91	METAL GLAZE	47K	5%	1/10W
R581	1-216-069-00	METAL CHIP	6.8K	5%	1/10W
R582	1-216-076-00	METAL CHIP	13K	5%	1/10W
R591	1-216-041-00	METAL CHIP	470	5%	1/10W
R601	1-216-295-00	METAL CHIP	0	5%	1/10W
R604	1-216-295-00	METAL CHIP	0	5%	1/10W
R606	1-216-295-00	METAL CHIP	0	5%	1/10W
R610	1-216-067-00	METAL CHIP	5.6K	5%	1/10W

Ref. No.	Part No.	Description			Remarks
R611	1-216-069-00	METAL CHIP	6.8K	5%	1/10W
R613	1-216-085-00	METAL CHIP	33K	5%	1/10W
R614	1-216-081-00	METAL CHIP	22K	5%	1/10W
R615	1-216-049-00	METAL CHIP	1K	5%	1/10W
R620	1-216-295-00	METAL CHIP	0	5%	1/10W
R901	1-216-057-00	METAL CHIP	2.2K	5%	1/10W
R905	1-216-091-00	METAL CHIP	56K	5%	1/10W
R911	1-216-653-11	METAL CHIP	1.2K	0.5%	1/10W
R913	1-208-772-11	METAL GLAZE	390	0.50%	1/10W
R920	1-216-295-00	METAL CHIP	0	5%	1/10W
R921	1-216-055-00	METAL CHIP	1.8K	5%	1/10W
R922	1-216-067-00	METAL CHIP	5.6K	5%	1/10W
R923	1-216-081-00	METAL CHIP	22K	5%	1/10W
R924	1-216-081-00	METAL CHIP	22K	5%	1/10W
R925	1-216-045-00	METAL CHIP	680	5%	1/10W
R926	1-216-051-00	METAL CHIP	1.2K	5%	1/10W
R927	1-216-049-00	METAL CHIP	1K	5%	1/10W
R928	1-216-667-11	METAL CHIP	4.7K	0.5%	1/10W
R929	1-216-295-00	METAL CHIP	0	5%	1/10W
R930	1-216-295-00	METAL CHIP	0	5%	1/10W
R935	1-216-049-00	METAL CHIP	1K	5%	1/10W
R936	1-216-049-00	METAL CHIP	1K	5%	1/10W
R945	1-216-067-00	METAL CHIP	5.6K	5%	1/10W
R946	1-216-075-00	METAL CHIP	12K	5%	1/10W
R949	1-216-031-00	METAL CHIP	180	5%	1/10W
R951	1-216-065-00	METAL CHIP	4.7K	5%	1/10W
R952	1-216-045-00	METAL CHIP	680	5%	1/10W
R953	1-216-069-00	METAL CHIP	6.8K	5%	1/10W
R954	1-216-065-00	METAL CHIP	4.7K	5%	1/10W
R955	1-216-037-00	METAL CHIP	330	5%	1/10W
R956	1-216-033-00	METAL CHIP	220	5%	1/10W
R962	1-216-075-00	METAL CHIP	12K	5%	1/10W
R963	1-216-077-00	METAL CHIP	15K	5%	1/10W
R967	1-216-057-00	METAL CHIP	2.2K	5%	1/10W
R968	1-216-295-00	METAL CHIP	0	5%	1/10W
R973	1-216-041-00	METAL CHIP	470	5%	1/10W
R980	1-216-081-00	METAL CHIP	22K	5%	1/10W
R981	1-216-107-00	METAL CHIP	270K	5%	1/10W
R983	1-216-295-00	METAL CHIP	0	5%	1/10W
R984	1-216-295-00	METAL CHIP	0	5%	1/10W
R985	1-216-045-00	METAL CHIP	680	5%	1/10W
R986	1-216-075-00	METAL CHIP	12K	5%	1/10W
R988	1-216-069-00	METAL CHIP	6.8K	5%	1/10W
R989	1-216-295-00	METAL CHIP	0	5%	1/10W
R990	1-216-071-00	METAL CHIP	8.2K	5%	1/10W
R991	1-216-045-00	METAL CHIP	680	5%	1/10W
R992	1-216-029-00	METAL CHIP	150	5%	1/10W
R996	1-216-295-00	METAL CHIP	0	5%	1/10W
R997	1-216-077-00	METAL CHIP	15K	5%	1/10W
R998	1-216-295-00	METAL CHIP	0	5%	1/10W
		< VIBRATOR >			
X502	1-579-608-11	VIBRATOR, CRYSTAL 4.433619MHz			

Ref. No.	Part No.	Description			Remarks
⚠CP401	1-468-034-21	POWER BLOCK(SR665)			
		**********			
		< CAPACITOR >			
C202	1-111-044-11	ELECT	2200uF		16V
C203	1-111-019-11	ELECT	2200uF		10V
C204	1-111-019-11	ELECT	2200uF		10V
C207	1-111-035-11	ELECT	330uF		16V
		< DIODE >			
D101	8-719-054-32	DIODE ERA15-06			
D102	8-719-030-24	DIODE EG01C			
D103	8-719-920-32	DIODE ERA15-02			
D105	8-719-038-80	DIODE RD3.0ES			
D106	8-719-038-80	DIODE RD3.0ES			
D202	8-719-050-64	DIODE SF5LC20U			
D203	8-719-062-28	DIODE SF10SC4			
D204	8-719-059-45	DIODE AU02Z			
D205	8-719-160-62	DIODE RD15FB			
		< IC >			
IC201	8-759-064-03	IC AN1431			
		< TRANSISTOR >			
Q102	8-729-281-53	TRANSISTOR 2SC1815GR			
Q103	8-729-012-30	TRANSISTOR 2SC4040			
Q104	8-729-012-30	TRANSISTOR 2SC4040			
		< RESISTOR >			
R113	1-247-827-11	CARBON	680	5%	1/4W
R114	1-247-828-11	CARBON	750	5%	1/4W
R203	1-247-835-11	CARBON	1.5K	5%	1/4W

Ref. No.	Part No.	Description	Remarks
		MISCELLANEOUS	
		**********	
16	1-777-675-11	CABLE, FLAT (FuF-19) 5P	
17	1-777-671-11	CABLE, FLAT (FuF-17)	
18	1-762-844-21	SWITCH, ROTARY	
53	1-777-669-11	CABLE, FLAT (FMR-5)	
54	1-777-668-11	CABLE, FLAT (FMR-4)	
59	1-777-674-11	CABLE, FLAT (FMC-9) 15P	
60	1-777-673-11	CABLE, FLAT (FMC-8) 23P	
61	1-764-137-11	CONNECTOR, TRANSLATION 15P	
62	1-777-667-11	CABLE, FLAT (FMD-10)	
103	1-777-340-11	CABLE, FLAT (FMD-11) 19P	
105	1-777-848-11	CABLE, FLAT (FMM-20)	
158	1-500-144-11	HEAD, FE	
203	8-848-622-02	UPPER DRUM ASSY DZR-66-R	
221	8-848-666-11	LOWER DRUM ASSY DZL-51B/J-RP(M901)	
260	1-762-076-11	SWITCH, ROTARY	
518	1-692-498-11	SWITCH, ROTARY	
M902	1-698-409-14	MOTOR, DC(CAPSTAN)	
M903	X-3943-883-1	MOTOR ASSY, CAM	
M904	A-7048-853-A	DRUM ASSY DGH-0D8A-R	
M905	8-835-499-01	MOTOR, DC SCE-0501A(CAPSTAN)	
M906	X-3942-946-1	MOTOR ASSY, CAM	

Ref. No.	Part No.	Description	Remarks
		ACCESSORIES & PACKING MATERIALS	
		**********	
⚠	1-574-056-11	CORD, POWER (B,NP,NR,VC)	
⚠	1-575-131-11	CORD, POWER SUPPLY (AS,MN)	
	1-575-334-11	CORD, CONNECTION(FOR VIDEO/AUDIO) 1.5m	
	1-575-335-21	CORD, CONNECTION(FOR S VIDEO) 1.5m	
	1-696-593-11	CORD, CONNECTION (PAL)(FOR RF) 1.5m	
⚠	1-696-819-11	CORD, POWER (AS,MN)	
	1-770-321-11	ADAPTOR, CONVERSION 6P (AS,MN)	
⚠	1-775-843-11	CORD, POWER (WITH FILTER) (UX)	
	3-858-679-11	MANUAL, INSTRUCTION(ENGLISH)(UX)	
	3-858-679-21	MANUAL, INSTRUCTION(FRENCH)(B)	
	3-859-667-11	MANUAL, INSTRUCTION(FRENCH)(NP,VC)	
	3-859-667-21	MANUAL, INSTRUCTION(GERMAN)(NP,VC)	
	3-859-667-31	MANUAL, INSTRUCTION(SPANISH)(NP)	
	3-859-667-41	MANUAL, INSTRUCTION(DUTCH)(VC)	
	3-859-667-51	MANUAL, INSTRUCTION(SWEDISH)(NR)	
	3-859-667-61	MANUAL, INSTRUCTION(ITALIAN)(NP,VC)	
	3-859-667-71	MANUAL, INSTRUCTION(PORTUGUESE)(NP)	
	3-859-667-81	MANUAL, INSTRUCTION(FINNISH)(NR)	
	3-859-667-91	MANUAL, INSTRUCTION(DANISH)(NR)	
	3-860-334-11	MANUAL, INSTRUCTION(ENGLISH)(AS,MN)	
*	3-974-297-01	CUSHION (UPPER)	
*	3-974-298-01	CUSHION (LOWER)	
*	3-974-299-01	INDIVIDUAL CARTON (UX)	
*	3-974-299-11	INDIVIDUAL CARTON (NP,NR,VC)	
*	3-974-299-21	INDIVIDUAL CARTON (B)	
*	3-977-832-01	INDIVIDUAL CARTON (MN)	
*	3-977-832-11	INDIVIDUAL CARTON (AS)	

	**********	
	HARDWARE LIST	
	**********	
#1	7-682-547-04	SCREW +P 3X6
#2	7-685-646-79	SCREW (3X8)
#3	7-682-548-04	SCREW +P 3X8
#4	7-682-948-01	SCREW +PSW 3X8
#9	7-685-648-79	SCREW +BVTP 3X12 TYPE2 IT-3
#12	7-688-001-01	W 2, MIDDLE
#13	7-688-003-01	W 3, SMALL
#14	7-621-772-08	SCREW +B 2X3

Note : The components identified by mark ⚠ or dotted line with mark ⚠ are critical for safety.
Replace only with part number specified.

6-1. Video 8 SYSTEM

6-1-1. Interface between Video 8 system control and video, audio block (MH-18 board IC002)

Signal name	Pin No.	VTR mode													
		I/O	STOP	FF	REW	×2	−×2	PB	PICTURE SEARCH		PB · PAUSE	SLOW	REVERSE SLOW	REC	REC PAUSE
									(Hi) CUE	(Hi) REVIEW					
SP/$\overline{LP}$	IC002 ㉜	O	*1	H	H	*1	*1	*2	*2	*2	*1	*1	*1	*9	H/L
VA PB MODE	IC002 ㊾	O	L	L	L	H	H	H	H	H	H	H	H	L	L
JOG VD *3	IC002 ②	O	L	L	L	L	L	L	L	L	L	L	L	L	L
$\overline{RP\ PB\ MODE}$	IC002 ⑤	O	L	L	L	L	L	L	L	L	L	L	L	H	L
$\overline{FE\ ON}$	IC002 ⑥	O	H	H	H	H	H	H	H	H	H	H	H	L	H
RF SWP	IC002 ㊾	O	L	*4	*4	*4	*4	*4	*4	*4	*4	*4	*4	*4	*4
JOG	IC002 ④	O	L	L	L	H	H	L	H	H	H	H	H	L	L
PB SP DET	IC002 ㊸	I	L	*5	*5	*5	*5	L	*5	*5	*5	—	—	H	H
CLOG DET	IC002 ㊿	I	H	*6	*6	*6	*6	*6	*6	*6	*6	*6	*6	H	*6
V SYNC	IC002 ㊽	I	*7	*7	*7	*7	*7	*7	*7	*7	*7	*7	*7	*7	*7
AUDIO PB	IC002 ㊳	O	L	L	L	*8	*8	H	*8	*8	H	*8	*8	L	L
AUDIO MUTE	IC002 ⑫	O	L	L	L	H	H	L	H	H	H	H	H	L	L
$\overline{VIDEO\ CS}$	IC002 ㉕	O	"L" pulse train of vertical interval												
C SO2	IC002 ㊵	O	Pulse train of vertical interval												
SCK2	IC002 ㊶	O	"L" pulse train of vertical interval												

*1. Outputs the identification result of the immediately previous mode. SP mode at H and LP mode at L.
*2. Outputs the identification result of the recording mode of a playback tape. SP mode at H and LP mode at L.
*3. Pseudo VD signal.
*4. 25 Hz pulse with 50 % duty cycle. (Synchronized with rotation of drum).
*5. The SP recorded segment of a tape: H. LP recorded segment: L.
*6. Non-recorded segment or dropout portion of a tape: H.
*7. LINE IN video signal, or the composite sync signal input which is separated from the playback video signal (Positive + polarity).
*8. Ring shuttle mode from REC PAUSE: L. Other modes: H.
*9. Recording time (SP), SP mode: H.

6-1-2. Interface between Video 8 servo control and servo block (MH-18 board IC002)

Signal name	Pin No.	VTR mode													
		I/O	STOP	FF	REW	×2 ×4	−×2 −×2	PB	PICTURE SEARCH (Hi) CUE	PICTURE SEARCH (Hi) REVIEW	PB · PAUSE	SLOW	REVERSE SLOW	REC	REC PAUSE
T.REEL FG	IC002 ⑰	I	—	*1	*1	*1	*1	*1	*1	*1	—	*1	*1	*1	—
S.REEL FG	IC002 ⑭	I	—	*1	*1	*1	*1	*1	*1	*1	—	*1	*1	*1	—
ATF ERROR	IC002 ⑪	I	—	*2	*2	*2	*2	*2	*2	*2	*2	*2	*2	*2	*2
DRUM PG	IC002 ⑱	I	—	*3	*3	*3	*3	*3	*3	*3	*3	*3	*3	*3	*3
DRUM FG	IC002 ⑲	I	—	*4	*4	*4	*4	*4	*4	*4	*4	*4	*4	*4	*4
CAP FG/HMS CAP FG	IC002 ⑳㉗	I	—	*5	*5	*5	*5	*5	*5	*5	—	*5	*5	*5	—
CAP ON	IC002 ㉑	O	L	H	H	H	H	H	H	H	L	*8	*8	H	L
REF PILOT	IC002 ㉕	O	*7	*6	*6	*6	*6	*6	*6	*6	*6	*6	*6	*6	*6
DRUM RVS *11	IC002 ㉔	O	L	L	L	L	L	L	L	L	L	L	L	L	L
CAP FWD	IC002 ㉒	O	L	H	L	H	L	H	H	L	L	*8	*9	H	L
DRUM PWM	IC002 ㉖	O	*10	*10	*10	*10	*10	*10	*10	*10	*10	*10	*10	*10	*10
CAP PWM	IC002 ㉕	O	L	*10	*10	*10	*10	*10	*10	*10	L	*10	*10	*10	L

*1. The pulse is input whose cycle corresponds to the reel rotation.
*2. ATF error voltage input.
*3. Approx. 25 Hz.
*4. Approx. 300 Hz.
*5. Approx. 560 Hz during REC/PB (SP).
*6. The four frequencies which are synchronized with drum rotation are output. f1 = 101.02 kHz. f2 = 117.18 kHz. f3 = 162.76 kHz, f4 = 146.48 kHz.
*7. f1 = 101.02 kHz and f3 = 162.76 kHz are output.
*8. "H" pulse during tape is advanced.
*9. "L" pulse during tape is advanced.
*10. PWM signal.
*11. Normally "L". Temporarily "H" only during transition of FF → PB, FF → STOP, FF → CUE. (Drum rotation is reversed.)

6-2. VHS SYSTEM

6-2-1. Interface between VHS system control and video block (MV-34 board IC201)

Signal name	Pin No.	I/O	STOP/ FF/ REW	TAPE THREAD-ING	TAPE UNTHREAD-ING	PB	PB · PAUSE	SLOW	×2	CUE	REVIEW	REC	REC · PAUSE
$\overline{V \cdot PB}$	IC201 ⑯	O	H	H	H	L	L	L	L	L	L	H	H
RF SW P (SW30)	IC201 ①	O	*1	*1	*1	*1	*1	*1	*1	*1	*1	*1	*1
Q VD/V MUTE	IC201 ②	O	L	L	L	*2	*3	*3	*3	*3	*3	L	L
$\overline{SP}$	IC201 ⑬	O	*4	*4	*4	*5	*5	*5	*5	*5	*5	*4	*4
LP	IC201 ⑫	O	L	L	L	*5	*5	*5	*5	*5	*5	*6	*6
REC	IC201 ⑭	O	L	L	L	L	L	L	L	L	L	H	H
V SYNC	IC201 ⑯	I	*7	*7	*7	*7	*7	*7	*7	*7	*7	*7	*7
CTL REC	IC201 ⑮	O	L	L	L	L	L	L	L	L	L	H	L
JOG	IC201 ⑰	O	L	L	L	L	H	H	H	H	H	L	L
ORC SETTEI	IC201 ⑪	O	L	L	L	L	L	L	L	L	L	*8	*8

*1. 25 Hz pulse with 50 % duty cycle. Synchronized with rotation of drum.
*2. Normally "L". "H" when CTL signal is not played back.
*3. "H" pulse of vertical rate.
*4. Selected by the recording time (SP/LP). "L" during SP mode.
*5. Selected by the tape recording mode.

Signal \ Recording mode	SP	LP
$\overline{SP}$ ⑬	L	H
LP ⑫	L	H

*6. Selected by REC mode. "L" at SP mode.
*7. Composite sync signal (positive polarity).
*8. "H" during APC measurement.

6-2-2. Interface between VHS system control and servo peripheral circuit (MV-34 board IC201)

Signal name	Pin No.	I/O	STOP	FF	REW	TAPE THREAD-ING	TAPE UNTHREAD-ING	PB	PB · PAUSE	SLOW	× 2	CUE	REVIEW	REC	REC · PAUSE	PB INDEX WRT/ERS
REC CTL	IC201 ⑦	O	✻1	✻1	✻1	✻1	✻1	✻1	✻1	✻1	✻1	✻1	✻1	✻1	✻1	
$\overline{\text{CAP STOP}}$	IC201 ⑮	O (O.D)	L	HI-Z (O.D)	HI-Z (O.D)	HI-Z (O.D)	HI-Z (O.D)	HI-Z (O.D)	L	✻3	HI-Z (O.D)	HI-Z (O.D)	HI-Z (O.D)	HI-Z (O.D)	HI-Z (O.D)	
STEP PLS	IC201 ⑨	O	L	L	L	L	L	L	L	✻2	L	L	L	L	L	
CTL REC	IC201 ⑮	O	L	L	L	L	L	L	L	L	L	L	L	H	L	H
CTL-INDEX	IC201 ⑲	O	L	L	L	L	L	L	L	L	L	L	L	L	L	H
PB CTL	IC201 ⑰	I	H	✻6	✻6			✻1	H/L	✻2	✻6	✻6	✻6	✻1	H	
DRUM PG	IC201 ⑱	I	✻4	✻7	✻7	✻5	✻5	✻7	✻7	✻7	✻7	✻7	✻7	✻7	✻7	
DRUM FG	IC201 ⑲	I	✻4	✻8	✻8	✻5	✻5	✻8	✻8	✻8	✻8	✻8	✻8	✻8	✻8	
CAP FG	IC201 ⑳	I	H/L	✻6	✻6	✻5	✻5	✻6	H/L	✻9	✻6	✻6	✻6	✻6	H/L	
CAP DA	IC201 ㉓	O	✻10	✻10	✻10	✻10	✻10	✻11	✻10	✻10	✻11	✻11	✻11	✻11	✻10	
DRUM DA	IC201 ㉔	O	✻12	✻12	✻12	✻12	✻12	✻12	✻12	✻12	✻12	✻12	✻12	✻12	✻12	
CTL STEP	IC201 ㉖	O	L	L	L	L	L	L	L	✻13	L	L	L	L	L	

✻1. 25 Hz pulse.
✻2. Pulse which occurs while tape is running.
✻3. Inverted logic pulse of step pulse.
✻4. "L" while drum is stopped.
✻5. Random pulse.
✻6. The pulse whose cycle is proportional to tape speed.
✻7. 25 Hz pulse.
✻8. 300 Hz pulse.
✻9. Pulse which occurs while tape is running.
✻10. "H" or "L" pulse of about 2 ms rate.
✻11. "H" or "L" pulse of about 1.5 ms rate.
✻12. "H" or "L" pulse of about 3 ms rate.
✻13. "H" during forward direction and during step drive.

6-2-3. Interface between system control and mechanism block (MV-34 board IC201)

Signal name	Pin No.	I/O	EJECTED	CASSETTE LOADING	CASSETTE UNLOADING	TAPE THREAD-ING	TAPE UNTHREAD-ING	STOP	FF	REW	PB	PB · PAUSE	SLOW	× 2	CUE	REVIEW	REC	REC · PAUSE
CAM LOAD	IC 201 ⑬	O	L	H	L	H	L	L	L	L	L	L	L	L	L	L	L	L
CAM UNLOAD	IC 201 ⑭	O	L	L	H	L	H	L	L	L	L	L	L	L	L	L	L	L
CAM 12V	IC 201 ㉛	O		H	H	L	L											
MODE 1	IC 201 ㉚	I	H	L	L	Not fixed	Not fixed	H	H	H	H	H	H	H	H	L	H	H
MODE 2	IC 201 ㉙	I	L	L	L	Not fixed	Not fixed	L	L	L	H	H	H	H	H	H	H	H
MODE 3	IC 201 ㉘	I	L	L	L	Not fixed	Not fixed	H	H	H	L	H	L	L	L	H	L	H
MODE 4	IC 201 ㉗	I	L	H	H	Not fixed	Not fixed	H	H	H	L	L	L	L	L	L	L	L
C IN/REC PRF	IC 201 ⑮	I	L	✻1	✻1	✻1	✻1	✻1	✻1	✻1	✻1	✻1	✻1	✻1	✻1	✻1	✻1	✻1
T REEL FG	IC 201 ㊹	I	H/L	H/L	H/L	H/L	H/L	H/L	✻2	✻2	✻2	H/L	✻2	✻2	✻2	✻2	✻2	H/L
S REEL FG	IC 201 ㊸	I	H/L	H/L	H/L	✻2	✻2	H/L	✻2	✻2	✻2	H/L	✻2	✻2	✻2	✻2	✻2	H/L
T/E LED	IC 201 ㊷	O (O.D)	✻3	✻3	✻3	✻3	✻3	✻3	✻3	✻3	✻3	✻3	✻3	✻3	✻3	✻3	✻3	✻3
CAP TRQ 1	IC 201 ㉞	O (O.D)											Not fixed					
CAP TRQ 2	IC 201 ㉝	O (O.D)										L	Not fixed					L
CAP TRQ 3	IC 201 ⑧	O (O.D)							H	H			Not fixed		H	H		
$\overline{\text{CAP STOP}}$	IC 201 ㉟	O (O.D)	L	L	L	H	H	L	H	H	H	L	✻4	H	H	H	H	L
CAP RVS	IC 201 ㉜	O	H			L	H	H/L	L	H	L	L	L/✻4	L	L	H	L	L
CAP DA	IC 201 ㉓	O																
T SENS	IC 201 ㊶	I	✻3	✻3	✻3	✻5	✻5	✻5	✻5	✻5	✻5	✻5	✻5	✻5	✻5	✻5	✻5	✻5
S SENS	IC 201 ㊷	I	✻4	✻4	✻4	✻5	✻5	✻5	✻5	✻5	✻5	✻5	✻5	✻5	✻5	✻5	✻5	✻5

✻1. "L" when a cassette record enable table is broken. "H" when it is not broke.
✻2. The pulse whose cycle corresponds to the reel rotation.
✻3. "H" pulse of about 2 ms rate.
✻4. Pulse which occurs while tape is running.
✻5. Normally "L". "H" pulse of about 2 ms rate when tape top of tape end is detected.

6-2-4. Interface between VHS system control and system control peripheral circuit (MV-34 board IC201)

Signal mane	Pin No.	I/O	Input/output level
$\overline{\text{ASURA RESET}}$	IC201 ㊵	I	Normally "H". Goes to "L" when power failure is detected or when returned from power failure.
$\overline{\text{ASURA CS}}$	IC201 ㊹	I	Chip select signal from the tuner/mode control microprocessor (FR-113 board. IC001). "L" pulse of vertical rate.
SI (SO BUS)	IC201 ㊺	I	Serial communication data from the tuner/mode control microprocessor (FR-113 board, IC001). "L" pulse of vertical rate.
SO (SI BUS)	IC201 ㊻	O	Serial communication data to the tuner/mode control microprocessor (FR-113 board, IC001). "L" pulse of vertical rate.
S CLK	IC201 ㊼	I	Serial communication clock from the tuner/mode control microprocessor (FR-113 board. IC001). "L" pulse of vertical rate.

6-2-5. Interface between VHS system control and audio block (MV-34 board IC201)

Signal mane	Pin No.	I/O	STOP FF/ REW	TAPE LOADING	TAPE UNLOADING	PB	PB · PAUSE	SLOW	×2	CUE	REVIEW	REC	REC · PAUSE
AF ENVELOP	IC201 ㊽		AF RF envelope signal input pin for auto tracking.										
REC	IC201 ㊾	O	L	L	L	L	L	L	L	L	L	H	L
A MUTE	IC201 ㊷	O (O.D)	L	L	L	L	H	H	H	H	H	L	L
$\overline{\text{SP}}$	IC201 ㊸	O	*2	*2	*2	*3	*3	*3	*3	*3	*2	*2	*2
$\overline{\text{NA REC · P}}$	IC201 ⑪	O	L	L	L	L	L	L	L	L	L	H	L
AF REC · $\overline{\text{P}}$	IC201 ④	O	L	L	L	L	L	L	L	L	L	H	L
AF SWP	IC201 ⑩	O	*1	*1	*1	*1	*1	*1	*1	*1	*1	*1	*1

*1. 25 Hz pulse with 50 % duty cycle. Delayed about 5 ms after the RF switching pulse.
*2. Depending upon the recording mode selection. "L" during SP mode.
*3. Depending upon the recording mode of a tape. "L" during SP mode.

6-2-6. VHS servo/system control microprocessor (MV-34 board IC201)

Pin.No.	Signal name	I/O	Function
1	RF SWP	O	RF switching pulse
2	QVD	O	Quasi VD
3	QHD ENBL	O	Quasi HD voltage level control
4	AF REC P	O	HiFi recording control
5	NTSC	O	Not used
6	FE ON	O	Flying erase control
7	REC CTL	O	REC CTL
8	CAP TRQ3	I/O	Capstan torque control 3
9	APC2	O	APC
10	APC1	O	APC
11	NA REC P	I/O	Normal audio REC P
12	LP	O	LP/SP
13	CAM LOAD	O	Cam motor loading drive
14	CAM UNLOAD	O	Cam motor unloading drive
15	C IN(REC PROOF)	I	"Mis-erasing protection tab, cassette in detection signal input"
16	YNR	I	YNR control signal
17	REC P	I	R/P recording signal
18	NC	I	Not used
19	NC	O	Oscillator for chroma processing system frequency select 3.58/4.43
20	NT JUDGE	I	3.58/4.43 NTSC discriminating signal input
21	BLUE BACK ON	O	Force blue back
22	NTSC PB(HEAD CONT)	O	NTSC PB on PAL-TV signal
23	TV/VTR	O	Not used
24	SECAM	O	Not used
25	MESECAM	O	Not used
26	NC	O	Not used
27	MODE4	I	Cam encoder data 4
28	MODE3	I	Cam encoder data 3
29	MODE2	I	Cam encoder data 2
30	MODE1	I	Cam encoder data 1
31	CAM 12V	O	Cam motor 12V drive
32	T/E LED	O	Top/End sensor light up control
33	CAP TRQ2	O	Capstan torque control 2
34	CAP TRQ1	O	Capstan torque control 1
35	CAP STOP	O	Capstan stop control
36	FULL ERS	O	Full erase head control
37	NC	O	Not used
38	NC	O	Not used
39	MP(GND)	I	"Fixed to ""L"""
40	ASURA RESET	I	System reset signal
41	VSS	—	Ground
42	XTAL	—	System clock 16MHz
43	EXTAL	—	System clock 16MHz
44	ASURA CS	I	Servo/system control microprocessor chip select signal
45	S IN	I	Serial communication signal
46	S OUT	O	Serial communication signal
47	SCLK	O	Serial communication signal
48	AC ONLINE	—	Not used
49	NC	—	Not used
50	EDIT	O	Edit

Pin.No.	Signal name	I/O	Function
51	LINE3	—	Not used
52	AVSS	—	Unswitched ground
53	AVREF	—	AD port reference input UNSW 5V
54	AVDD	I	UNSW 5V
55	APC ERROR	—	APC error feedback
56	DEW	—	Not used
57	NC	I	Not used
58	VA ADJ	I	Switching position test mode
59	AF ENV	I	AF envelope level input
60	RF ENV	I	RF envelope level input
61	T SENS	I	Tape top sensor input
62	S SENS	I	Tape end sensor input
63	S REEL FG	I	Supply reel FG input
64	T REEL FG	I	Take-up reel FG input
65	NC	I	Not used
66	V SYNC	I	V sync. signal input
67	PB CTL	I	CTL input
68	DRM PG	I	Drum PG input
69	DRM FG	I	Drum FG input
70	CAP FG	—	Capstan FG input
71	POWER SAVE CONT	O	Not used
72	CAP RVS	O	Capstan RVS/FWD control
73	CAP DA	O	Capstan rotation control D/A output
74	DRM DA	O	Drum rotation control D/A output
75	CTL REC	O	CTL amp recording inhibition
76	CTL STEP	I	CTL amp step control
77	NC	I	Not used
78	NC	O	Not used
79	CTL INDEX	O	CTL amp index control
80	SO1	O	SSB serial data output
81	SCK1	O	SSB serial clock output
82	LINE 2	O	Not used
83	LINE 1	O	Not used
84	APC PWM	O	APC PWM output
85	NC	—	Not used
86	NC	—	—
87	NC	—	Not used
88	VSS	—	Ground
89	VDD	—	5V
90	NC	—	5V
91	QRC SETTEI	O	"EE/REC/PB: 0, Output setting: 1"
92	A MUTE	O	HiFi audio mute
93	SP	O	SP
94	NC	O	Not used
95	NC	O	Not used
96	REC	O	HiFi rec control
97	JOG	O	Variable speed playback: H (for video)
98	VPB	O	Video playback output control
99	STEP PLS	O	Capstan pulse drive control output
100	AF SWP	O	HiFi switching pulse

6-2-7. VHS mode control microprocessor (MV-34 board IC801)

Pin.No.	Signal name	I/O	Function
1	VPS SEL $\overline{R}$/V	O	Selection of video signal to VPS/PDC IC either R or V.
2	AUTO PRESET	O	H during auto reset.
3	OSD COLOR CONT	O	OSD chroma through control during SECAM.
4	MOD CONT	O	VTR or TV selection of RF modulator.
5	N.C.	O	Not used.
6	N.C.	O	Not used.
7	POWER CONT	O	Power ON/OFF control.
8	CLK ADJ	I	H during clock adjustment for watch mode.
9	C+ $\overline{ON}$/OFF	O	ON/OFF control of CANAL+ circuit power supply.
10	C+ DET	I	CANAL+ signal detection input.
11	$\overline{HIT\ RESET}$	O	HIT microprocessor reset output.
12	$\overline{RESET\ ENABLE}$	I	Resettable during L.
13	$\overline{POWER\ FAIL\ REQ}$	O	Reset request output to HIT microprocessor
14	$\overline{POWER\ FAIL}$	I	Power failure detection signal input.
15	N.C.	I	Not used.
16	N.C.	I	Not used.
17	N.C.	I	Not used.
18	N.C.	I	Not used.
19	N.C.	I	Not used.
20	N.C.	I	Not used.
21	N.C.	I	Not used.
22	N.C.	I	Not used.
23	$\overline{POWER\ SAVE\ CONT}$	O	DC - DC converter control during POWER SAVE.
24	N.C.	O	Not used.
25	N.C.	O	Not used.
26	N.C.	O	Not used.
27	QM DET	O	Macro-vision detected output.
28	N DET	O	Macro-vision detected output.
29	MV DET2	O	Macro-vision detected output.
30	MV DET1	O	Macro-vision detected output.
31	N.C.	O	Not used.
32	VHS EE S/$\overline{V}$	O	VHS video/S-video selection output.
33	N.C.	O	Not used.
34	N.C.	O	Not used.
35	SDA	O	Data output for I2C control.
36	SCL	O	Clock output for I2C control.
37	N.C.	O	Not used.
38	$\overline{OSD\ CS}$	O	OSD IC chip select signal output.
39	MP	I	Fixed to L.
40	$\overline{RESET}$	I	Reset input.
41	Vss		GND.
42	XTAL		System clock 16 MHz.
43	EXTAL		System clock 16 MHz.
44	WT CS	I	Chip select signal input.
45	SI	I	Serial communication data input.
46	SO	O	Serial communication data output.
47	SCLK	I	Serial communication clock input.
48	N.C.	O	Not used.
49	N.C.	O	Not used.
50	N.C.	O	Not used.

Pin.No.	Signal name	I/O	Function
51	N.C.	O	Not used.
52	AVss		GND.
53	AVref		Power supply 5 V.
54	AVdd		Power supply 5 V.
55	N.C.	I	Not used.
56	N.C.	I	Not used.
57	N.C.	I	Not used.
58	N.C.	I	Not used.
59	N.C.	I	Not used.
60	N.C.	I	Not used.
61	N.C.	I	Not used.
62	N.C.	I	Not used.
63	N.C.	I	Not used.
64	VHS H DET	I	VHS video signal detection input signal.
65	SECAM	I	SECAM identification signal input.
66	COMP SYNC	I	Composite sync input.
67	$\overline{S2\ SW}$	I	S-video connection to input-2 detection input signal.
68	$\overline{DAV}$	I	VPS/PDC data validity signal input.
69	H DET	I	Video signal detection input signal.
70	ACK VHS	I	VHS ACK signal input.
71	POWER MUTE	O	Audio mute signal.
72	N.C.	O	Not used.
73	N.C.	O	Not used.
74	ACK OUT	O	ACK signal output.
75	N.C.	O	Not used.
76	N.C.	O	Not used.
77	CMP SYNC	I	Composite sync input.
78	N.C.	I	Not used.
79	N.C.	I	Not used.
80	CG SO	O	OSD IC serial data
81	CG SCLK	O	OSD IC serial clock.
82	N.C.	O	Not used.
83	CLK OUT	O	Clock output for watch adjustment.
84	SDA IN	I	Data input for I2C control.
85	SCL IN	I	Clock input for I2C control.
86	TEX		Sub clock 32 kHz.
87	TX		Sub clock 32 kHz.
88	Vss		GND.
89	Vdd		Power supply 5 V.
90	Vdd		Power supply 5 V.
91	I CONT	O	CANAL+ I-signal control.
92	EURO AV CONT	O	AV CONT signal of EURO AV.
93	N.C.	O	Not used.
94	N.C.	O	Not used.
95	AV OUT SEL	O	AV output C+ decoder direct/EE selection output.
96	AV $\overline{V}$/S	O	EURO AV video/S-video selection output.
97	N.C.	O	Not used.
98	C+ SEL	O	CANAL+ decoder input TV/VTR selection.
99	LINE2 V/S	O	LINE 2 video/S-video selection output.
100	LINE3 V/S	O	LINE 3 video/S-video selection output.

6-2-8. Mode control microprocessor (FR-113 board IC001)

Pin.No.	Signal name	I/O	Function
1	32K X' tal		Pin to which an external sub oscillator is connected.
2	32K X' tal		Pin to which an external sub oscillator is connected.
3	MOD0	I	GND.
4	MOD1	I	GND.
5	X' tal		Pin to which an external main oscillator is connected.
6	X' tal		Pin to which an external main oscillator is connected.
7	Vss		GND.
8	RESET	I	Reset signal input (from WT).
9	N.C.	O	Not used.
10	N.C.	O	Not used.
11	N.C.	O	Not used.
12	N.C.	O	Not used.
13	N.C.	O	Not used.
14	N.C.	O	Not used.
15	N.C.	O	Not used.
16	N.C.	O	Not used.
17	$\overline{\text{POWER FAIL REQ}}$	I	Power failure processing request signal input (from WT).
18	$\overline{\text{CG V SYNC}}$	I	V. sync signal input.
19	$\overline{\text{RESET ENABLE}}$	O	Power failure processing completion signal output (to WT).
20	$\overline{\text{VHS SYS CS}}$	O	VHS system control microprocessor chip select signal output.
21	DMS1	I	Rotation pulse input-1 of CLICK SHUTTLE.
22	DMS2	I	Rotation pulse input-2 of CLICK SHUTTLE.
23	SCL	I/O	I2C bus (clock).
24	SDA	I/O	I2C bus (data).
25	$\overline{\text{8mm SYS CS}}$	O	8 mm system control microprocessor chip select signal output.
26	$\overline{\text{SYS RESET}}$	O	System control microprocessor reset output.
27	$\overline{\text{WT CS}}$	O	WT microprocessor chip select signal output.
28	CMOD		5 V.
29	TA MUTE1	O	Tuner-1 audio mute output.
30	LED CS	O	Strobe signal for LED driver.
31	N.C.	O	Not used.
32	SIRCS IN	I	Remote control signal input.
33	PLL CLK1	O	Tuner-1 clock signal.
34	PLL DATA1	O	Tuner-1 data signal.
35	PLL ENABLE1	O	Tuner-1 enable signal.
36	$\overline{\text{TU V DET1}}$	I	Tuner-1 video signal detection signal input.
37	$\overline{\text{BG/L}}$	O	Tuner system selection-1 for B destination.
38	$\text{L}/\overline{\text{L}}$	O	Tuner system selection-2 for B destination.
39	SEG1	O	VFP segment 1.
40	SEG2	O	VFP segment 2.
41	SEG3	O	VFP segment 3.
42	SEG4	O	VFP segment 4.
43	SEG5	O	VFP segment 5.
44	SEG6	O	VFP segment 6.
45	SEG14	O	VFP segment 14.
46	SEG15	O	VFP segment 15.
47	SEG16	O	VFP segment 16.
48	SEG7	O	VFP segment 7.
49	Vcc		Power input pin (4.5 V to 5.5 V).
50	SEG8	O	VFP segment 8.

Pin.No.	Signal name	I/O	Function
51	SEG9	O	VFP segment 9.
52	SEG10	O	VFP segment 10.
53	Vfdp		High withstand voltage pull-down power supply terminal.
54	SEG11	O	VFP segment 11.
55	SEG12	O	VFP segment 12.
56	SEG13	O	VFP segment 13.
57	SEG17	O	VFP segment 17.
58	Vss		GND.
59	SEG18	O	VFP segment 18.
60	SEG19	O	VFP segment 19.
61	SEG20	O	VFP segment 20.
62	SEG21	O	VFP segment 21.
63	SEG22	O	VFP segment 22.
64	SEG23	O	VFP segment 23.
65	SEG24	O	VFP segment 24.
66	GRID8	O	VFP grid 8.
67	Vcc		Power input pin (4.5 V to 5.5 V).
68	GRID7	O	VFP grid 7.
69	GRID6	O	VFP grid 6.
70	GRID5	O	VFP grid 5.
71	GRID4	O	VFP grid 4.
72	GRID3	O	VFP grid 3.
73	GRID2	O	VFP grid 2.
74	GRID1	O	VFP grid 1.
75	N.C.	O	Not used.
76	N.C.	O	Not used.
77	SI BUS	I	Serial data input.
78	SO BUS	O	Serial data output.
79	SCLK	O	Serial data clock.
80	MEM CS	O	EEPROM chip select signal output.
81	MEM CLK	O	EEPROM clock.
82	MEM DATA	I/O	EEPROM data.
83	AVss		Analog GND.
84	AFT1	I	Tuner-1 AFT input.
85	N.C.	O	Not used.
86	A/D2	I	Key data read A/D 2 input.
87	A/D3	I	Key data read A/D 3 input.
88	A/D4	I	Key data read A/D 4 input.
89	A/D5	I	Key data read A/D 5 input.
90	A/D6	I	Key data read A/D 6 input.
91	A/D7	I	Key data read A/D 7 input.
92	AVcc	I	Analog power input pin (4.5 V to 5.5 V).
93	A/D8	I	Key data read A/D 8 input.
94	A/D9	I	Key data read A/D 9 input.
95	N.C.	O	Not used.
96	N.C.	O	Not used.
97	LANC IN	I	LANC input.
98	LANC OUT	O	LANC output.
99	BUZZER	O	Buzzer output.
100	Vcc		Power input pin (4.5 V to 5.5 V).

SECTION 7
ADJUSTMENTS

⟨SERVICE MODE⟩

1. SETTING THE SERVICE MODE

The service mode consists of the adjustment mode which adjusts the EVR and the test mode which shows the condition of the unit. The unit can be set into the test mode and adjustment mode by connecting the adjustment remote commander (Set the HOLD switch to "HOLD").

(1) Service LANC memory map

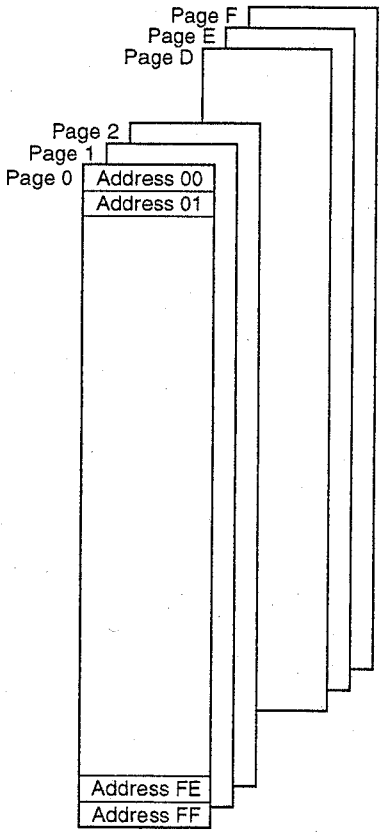

Page	Page Layout
0	
1	Shared by VTR section (Note 1)
2	Mode controller RAM, I/O (Note 1)
3	Mechanism controller RAM, I/O (Note 1)
4	
5	
6	F page write protect
7	
8	
9	
A	
B	T/T controller RAM, I/O (Note 1)
C	
D	VTR EEPROM (Note 2)
E	
F	

LCD Display of the adjusting Remote Controller

Adjustment remote commander RM-95 (J-6082-053-B)

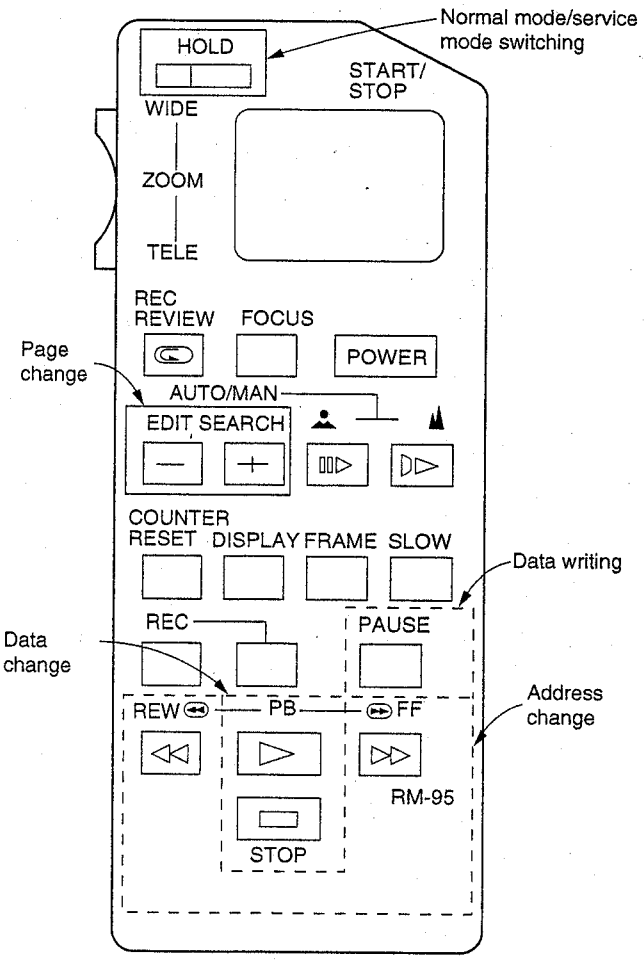

Note 1: When data on this page is rewritten with adjustment remote control to set the adjustment mode or test mode, that data will not be written to EEPROM. Therefore, simply disconnect the main power to return to the original state (normal state).

Note 2: The data of this page is written in the EEPROM (IC002 of FR-113 board).

[Shifting to the service mode using the adjustment remote commander]

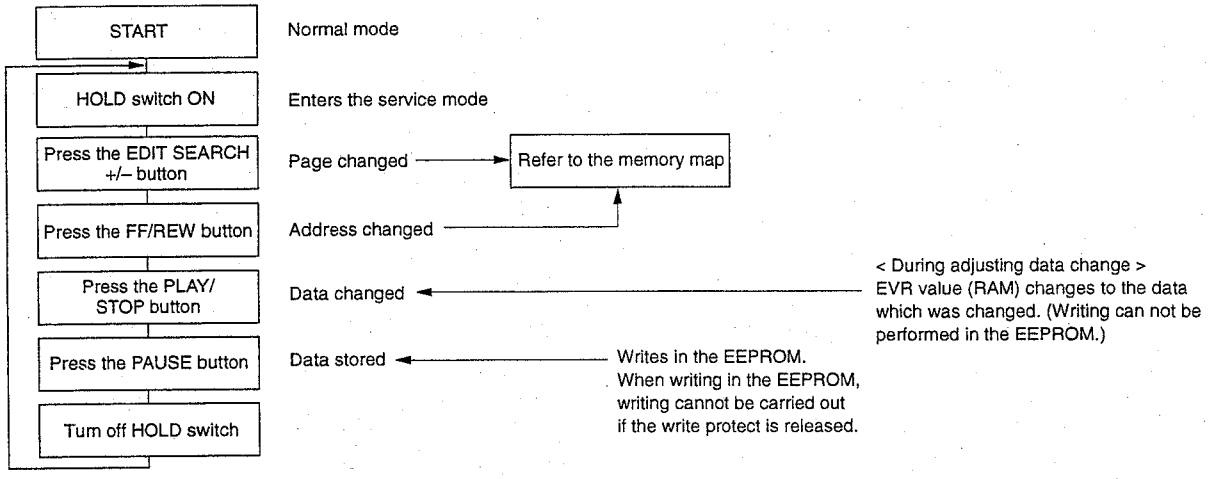

Command Name	Command Function	Normal LANC Command
Page Up	Page +1	Edit Search +
Page Down	Page –1	Edit Search –
Direct Page Set	Sets to the specified page	Event Clear
Address Up	Address +1	Fast Forward
Address Down	Address –1	Rewind
Data Up	Data +1	Play Back
Data Down	Data –1	Stop
Store	Writes data in the EEPROM, RAM	Pause

(2) Adjustment remote commander connecting procedure.

SLV-T2000 series dose not have the LANC jack for LANC adjusting remote commander. When adjusting, connect the LANC jig (J-6090-051-A) to CN403 on MV-34 board.

Note : When connecting or disconnecting LANC jig to CN403 on MV-34 board, first connect the adjusting remote commander to the jack on LANC jig before connecting LANC jig to CN403.
Connection or disconnection of the adjusting remote commander in the condition LANC jig is connected to CN403 causes IC link to damage itself.

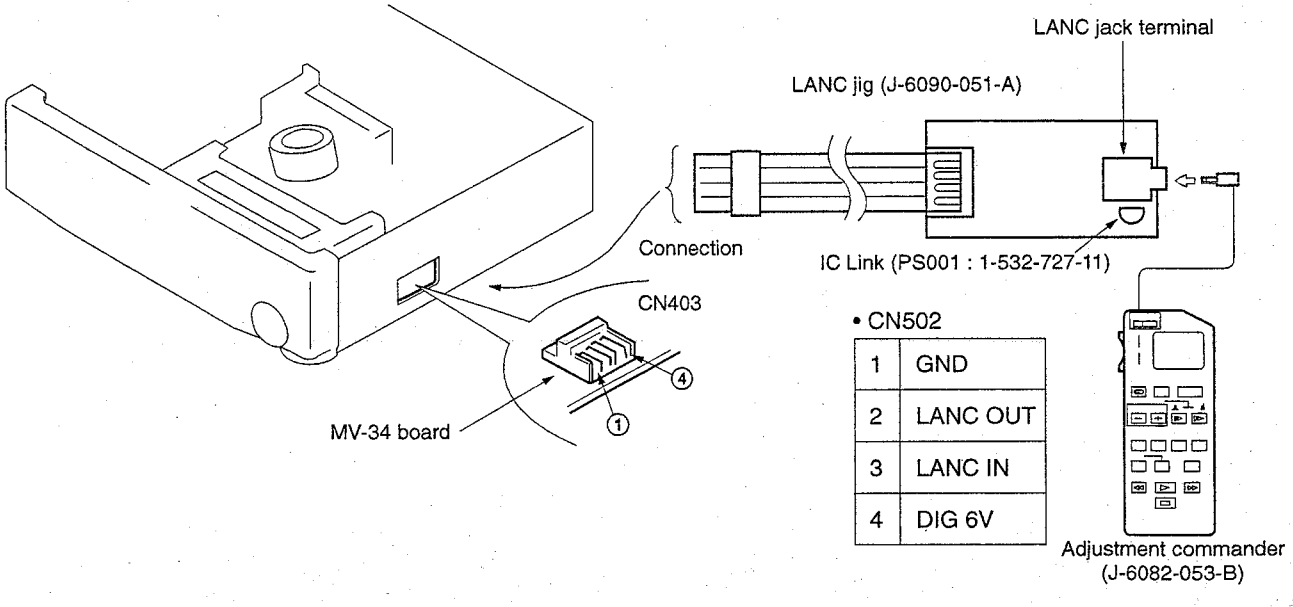

2. TEST MODE SETTING

(1) Servo/System Control Micom

1. Set page : 3, address : 00, data : 02.
2. The system goes to the test mode by setting data as following of page : 3, address : 01.

Note : Test mode is released by turning power off.

3. EMERGENCY CODES

These codes can be used to check the condition of failure (abnormality) that occurred.

	Video 8	VHS
Page D	Address EC	Address E0

First Emergency Code
...The code of the first failure that occurred.

Page D	Address E8	Address DC

Second Emergency Code
...The code of the second failure that occurred.

Page D	Address E4	Address D8

Last Emergency Code
...The code of the last failure that occurred (This data will be renewed each time a failure occurs).

Note 1 : After completing necessary adjustments/repairs, be sure to rewrite the data address EC, E8, E0, DC and D8 to 00.
Note 2 : When writing data, after setting the data, be sure to press the PAUSE button on the adjustment remote control.

Code	Condition of Failure
00	No failure
10	Load Direction, Cam Encoder Failure
11	Unload Direction, Cam Encoder Failure
20	Not used.
21	Not used.
22	T Reel Rotational Failure
23	S Reel Rotational Failure
24	FG Failure at Start of T Reel
25	FG Failure at Start of S Reel
26	Failure at Start of Capstan
31	Failure During Stationary Operation of Capstan
40	FG Failure at Start of Drum
41	PG Failure at Start of Drum
42	FG Failure During Stationary Operation of Drum
43	Not used
44	Not used
50	Not used
60	FL Cassette Compartment Failure
70	DEW EJECT Failure

4. D PAGE MEMORY MAP

Note : When replacing EEPROM on the MA board, set data on page D as follows.

Address	Function	Initial Value
00 – 07		00
08 – 10		00
11	Video 8 Adjustment Mode	10
12	Video 8 Switching Position Adjustment (LOW)	*1
13	Video 8 Switching Position Adjustment (HIGH)	*1
14	SP Mode FWD X2	00
15	SP Mode FWD Slow	00
16	Cap. Duty (LOW)	00 *1
17	Cap. Duty (HIGH)	20 *1
18 – 1F		
20	SP Slow Adjustment (Video 8)	80
21	LP Slow Adjustment (Video 8)	80
22	SP — Slow Adjustment (Video 80	80
23	LP — Slow Adjustment (Video 8)	80
24	SP X 2 Adjustment (Video 8)	80
25	LP X2 Adjustment (Video 8)	80
26 – D7		
D8	Emergency Code (LAST)(VHS)	00
D9 – DB		00
DC	Emergency Code (2nd)(VHS)	00
DD – DF		00
E0	Emergency Code (1st)(VHS)	00
E1 – E3		00
E4	Emergency Code (LAST) (Video 8)	00
E5 – E7		00
E8	Emergency Code (2nd)(Video 8)	00
E 9 – EB		00
EC	Emergency Code (1st)(Video 8)	00
ED – EF		00
F0 – FF	Factory Data	

*1 Center Value

7-1. MECHANICAL ADJUSTMENTS

1-1. VHS MECHANICAL ADJUSTMENTS

For Mechanical Adjustments

For the procedures how to adjust and check the mechanism, as well as how to replace mechanical parts. Refer to the separate VHS Video Mechanical Adjustment Manual (H MECHANISM)(9-973-623-11)

However, for the procedures how to set the Track Shift mode, refer to the following text.

1-2. Video 8 MECHANICAL ADJUSTMENTS

For Mechanical Adjustments

For the procedures how to check the mechanism, as well as how to replace mechanical parts, refer to the separate 8mm Video Mechanical Adjustment Manual V (F MECHANISM) (9-973-445-11).

However, for the procedures how to set the Track Shift mode, refer to the following text.

1-2-1. TAPE PATH ADJUSTMENT (TRACK SHIFT)

The 8mm Video Tape Recorder system uses the ATF (Automatic Track Finding) function in which four different pilot signals are used for controlling the tape speed instantaneously to provide high precision tracking. This eliminates the Tracking Adjustment control, thus allowing accurate tracing.

In spite of its advantageous feature, the ATF system may have a difficulty in adjusting the tape path system. The ATF will automatically corrects tracing even if impossible to perform a complete adjustment.

Therefore, when performing a fine adjustment for tracking, the Track Shift mode should be entered before starting this adjustment. This mode will force to operate the ATF to shift the amount of tracking by a given quantity (approximately 1/4), so that tracking can be easily fine adjusted. Furthermore, no track shift jig is needed.

1. Setting the Track Shift Mode

1) Place the adjustment remote control RM-95 (J-6082-053-B) in the HOLD ON position.
2) Category code setting
   Page : 3, address : 00, data : 02.
3) Track shift playback
   Page : 3, address : 01, data : 01.

(To change the quantity fo track shift, data stored at category 02, address 08 should be changed.)

Note 1 : For details of the Test Mode, refer to "SECTION 7 SERVICE MODE."

Note 2 : If the LP mode is recognized by the system wrongly, operate the Recording Time SP/LP button to enter the SP mode.

Note 3 : After adjustment, operate the PB/STOP button to reset to adjustment data 00. Place the remote control in the HOLD OFF position to return to the normal mode.

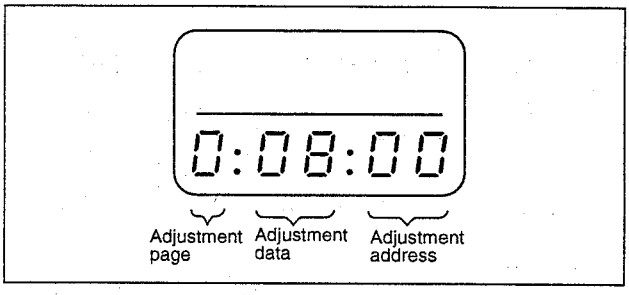

Fig. 7-1-1

2. Preparation before Adjustment

1) Clean the surfaces over which tape moves past (of the tape guides, drum, capstan shaft and pinch rollers).
2) Oscilloscope Connection and Waveform Output:
   1 ch : Drum head's RF signal output, MH-18 board CN102 pin ③ (PB RF).
   External trigger input : MH-18 board CN102 pin ② (RF SWP)
   GND : MH-18 board CN102 pin ① (GND)
3) Playback alignment tape for tracking (WR5-1CP).
4) Check that RF waveform observed on the oscilloscope is flat on both entrance and exit sides.
   If not flat, perform necessary adjustment according to the separate 8mm Video Mechanical Adjustment V (F MECHANISM).

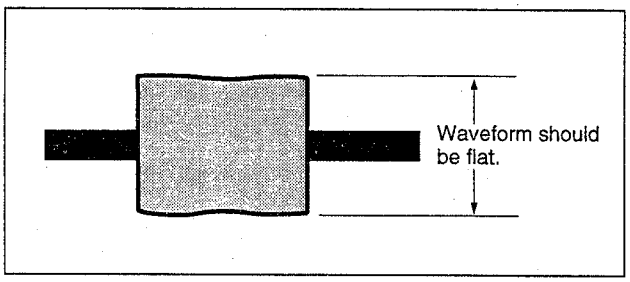

Fig. 7-1-2

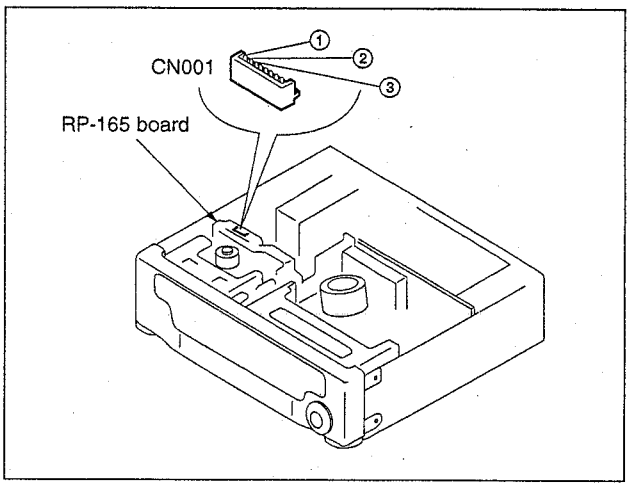

Fig. 7-1-3

7-2. ELECTRICAL ADJUSTMENT

See the adjusting parts location diagram from on page 7-30 for the adjustment.

For details of the SENSOR LANC, refer to page 7-1 〈SERVICE MODE〉.

2-1. PREPARATION BEFORE ADJUSTMENT

2-1-1. Equipment Required

The measuring instruments used for this alignment include:

1) Monitor TV
2) Oscilloscope, dual-trace, bandwidth of 30MHz or more, with delay mode (A probe 10 : 1 should be used unless otherwise specified.)
3) Frequency counter
4) Pattern generator (with Video Output terminal; refer to Section 7-2-1-2. Equipment Connection.)
5) Digital voltmeter
6) Audio generator
7) Audio level meter
8) Audio distortion meter
9) Audio attenuator
10) Vector scope
11) Alignment tapes

① For video 8

- For tracking adjustment (WR5-1CP)
  Parts No. : 8-967-995-07
- For video frequency adjustment (WR5-7CE)
  Parts No. : 8-967-995-18
- For L mode operation check
  For SP (WR5-5CSP)
  Parts No. : 8-967-995-46
  or (WR5-4CSP)
  Parts No.: 8-967-995-47
  For LP (WR5-4CL)
  Parts No. : 8-967-995-56
- For E mode operation check (ME tape)
  For SP (WR5-8CSE)
  Parts No. : 8-967-995-48
  For LP (WR5-8CLE)
  Parts No. : 8-967-955-57
- For AFM stereo operation check (WR5-9CS)

② For VHS

- Alignment type (KRV-51P)
  Parts No. : 8-192-605-36

12) Adjustment remote commander (J-6082-053-B)
- LANC jig (LA-LA2)
  Parts No. : J-6090-051-A

13) AFM DEV. jig
  Parts No. : J-6082-312-A

2-1-2. Equipment Connection

According to the specification of the input terminal (S VIDEO or VIDEO), connect required measuring instruments as shown in Fig. 7-2-1 and perform adjustment. The input terminal is specified in the parentheses ( ) in the signal column. Unless otherwise specified, either terminal takes precedence. When performing adjustment with the VIDEO input terminal, pull out the connector from the S VIDEO input terminal.

Note 1 : When S VIDEO input is specified for a specific adjustment, if the adjustment is performed with VIDEO input, the product specifications for this unit may not be satisfied. The specified input must be always used.

Note 2 : If an adjustment is performed by using a VTR with S VIDEO output terminal as a signal source, the performance of this unit will be affected by that VTR. A pattern generator with Y/C separation output terminal should be used wherever possible.

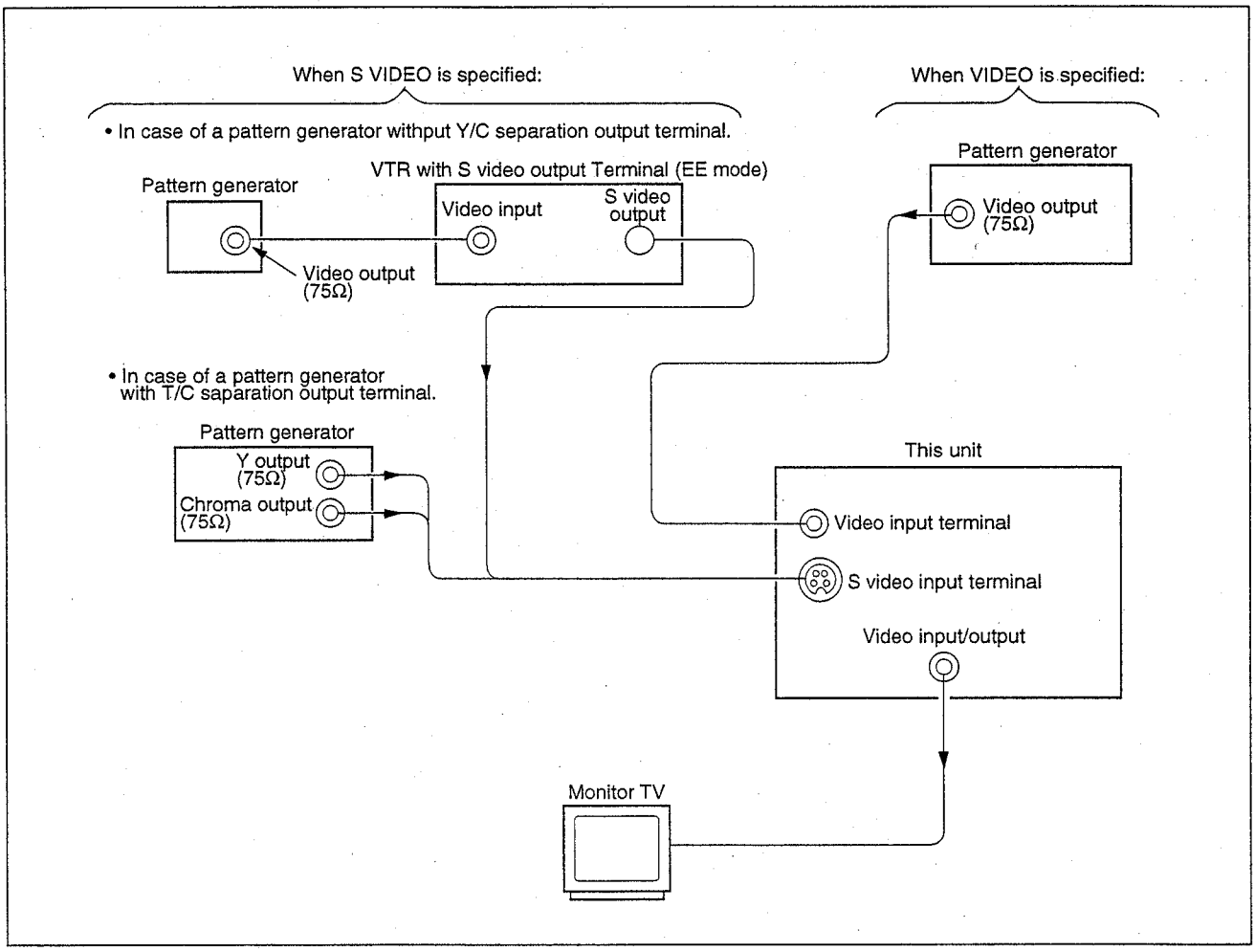

Fig. 7-2-1

2-1-3. Input Signal Check

Video signal produced by a pattern generator is used as an adjustment signal to perform electrical alignment for this unit. This video signal must satisfy the specification.

1) S VIDEO Input

Connect an oscilloscope to the Y Signal terminal of the S Video input terminal. Check that the synchronizing signal of the Y signal is approximately at 0.3Vp-p and that its video portion has an amplitude of approximately 0.7Vp-p. (When a VTR with S Video output terminal is used, in addition to these checks, make sure that there are no residual chroma and burst signals.) Then, connect the scope to the Chroma signal terminal of the S Video Input terminal and check that the chroma signal has a burst signal amplitude of 0.3Vp-p and the burst signal waveform is flat. And check that the amplitude ratio of burst signal to chroma signal is 0.30 : 0.66. The Y and chroma signals used for electrical alignment are shown in Fig. 7-2-2.

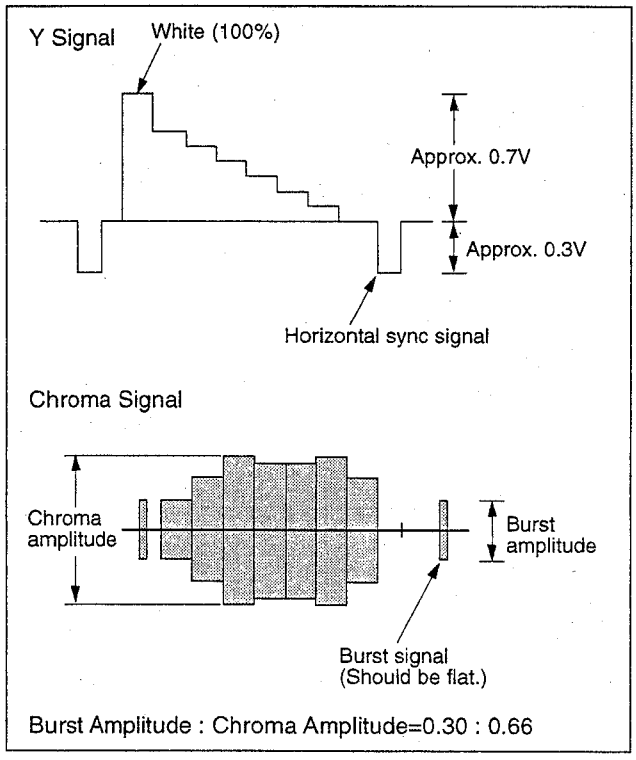

Fig. 7-2-2 Color Bar Signals of Pattern Generator

Note : VIDEO input usually selected in this set. To select S VIDEO input, use remote commander to enter the MENU mode and change Video Input of Line 3 in mode setting from Video to S Video.

Unless otherwise specified, place the switches and controls of this unit in the following positions:

• Input Select switch ..... LINE 2

2) VIDEO Input

Connect an oscilloscope to the Video Input terminal. Check that the synchronizing signal of the Y signal has an amplitude of approximately 0.7V and that the burst signal has an amplitude of approximately 0.3V and its waveform is flat. And check that the level ratio of burst signal to "red" signal is 0.30 : 0.66.

The video signal (color bar) used for electrical aligning this unit is shown in Fig. 7-2-3.

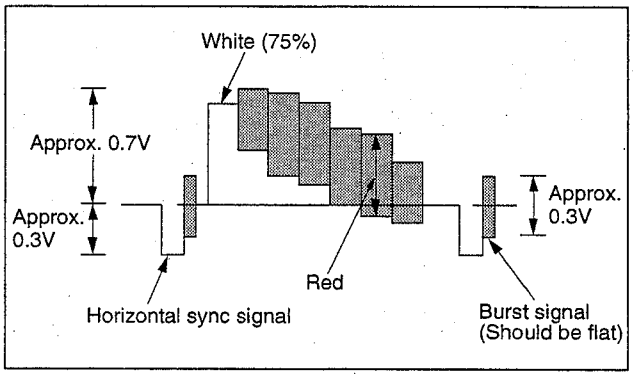

Fig. 7-2-3 Color Bar Signals of Pattern Generator

2-1-4. VHS Alignment Tape

• Contents of KRV-51P

	Mode	Period	Video signal	Audio signal	
				Hi-Fi	Normal
1	SP	7 minutes	Color bar	400Hz (L/R)	400Hz
2		3 minutes	Monoscope		
3	LP	7 minutes	Color bar		
4		3 minutes	Monoscope		

2-1-5. Video 8 Alignment Tape

The following alignment tapes are available.
The tape specified in the signal column for the adjustment to be performed should be used.

Note that if no tape code is specified for the adjustments in which alignment tapes for operation check may be used.

Alignment Tape	Record Mode	Tape Type	Tape Speed	Contents of Record		Application
				Video Area	PCM Area	
Tracking WR5-1CP	L	MP	SP	CH2 : 1MHz tape path adjustment signal Switching position adjustment marker (CH1 : 9MHz)		Tape path adjustment Switching position adjustment
Video frequency characteristic WR. -7CE	E	ME	SP	RF sweep 0~15MHz Marker 2, 4.5, 7, 8.5, 10MHz		Frequency characteristic
Operation check WR5-5CSP	L	MP	SP	• Video signal Color bar 4min. Monoscope 4min. • Audio signal (AFM) 400Hz 60% modulated	• Audio signal (PCM) Monoscope portion 20Hz 20sec. } This cycle 400Hz 20sec. } is repeated 14kHz 20sec. } 4 times. Color bar portion 1kHz, 4min.	Operation check
WR5-8CSE	E	ME	SP		400Hz, 8min.	
WR5-4CL	L	MP	LP	• Video signal Color bar 4min. Monoscope 4min. • Audio signal (AFM) 400Hz 60% modulated		
WR5-3CL	L	MP	LP			
WR5-8CLE	E	ME	LP		• Audio signal (PCM) 400Hz	
AFM stereo operation check WR5-9CS	L	MP	SP	• Video signal Color bar 4min. Monoscope 4min. • Audio signal (AFM) Stereo portion (color bar) Lch : 400Hz Rch : 1kHz (L+R 1.5MHz ± 60kHz dev) (L-R 1.5MHz ± 30kHz dev) Bilingual portion (monoscope) MAIN : 400Hz (1.5MHz ± 60kHz dev) SUB : 1kHz (1.7MHz ± 30kHz dev)	• Audio signal (PCM) 400Hz, 8min.	AFM stereo operation check

Note : Recording Mode
L ····· Conventional mode
E ····· Hi8 (High Band) mode

Tape Type
MP ····· Metal powder tape
ME ····· Metal evaporated tape

The color bar signal recorded on these alignment tapes are shown in Fig. 7-2-4.

Note : This waveform is measured at the VIDEO OUT terminal (terminated at 75Ω).

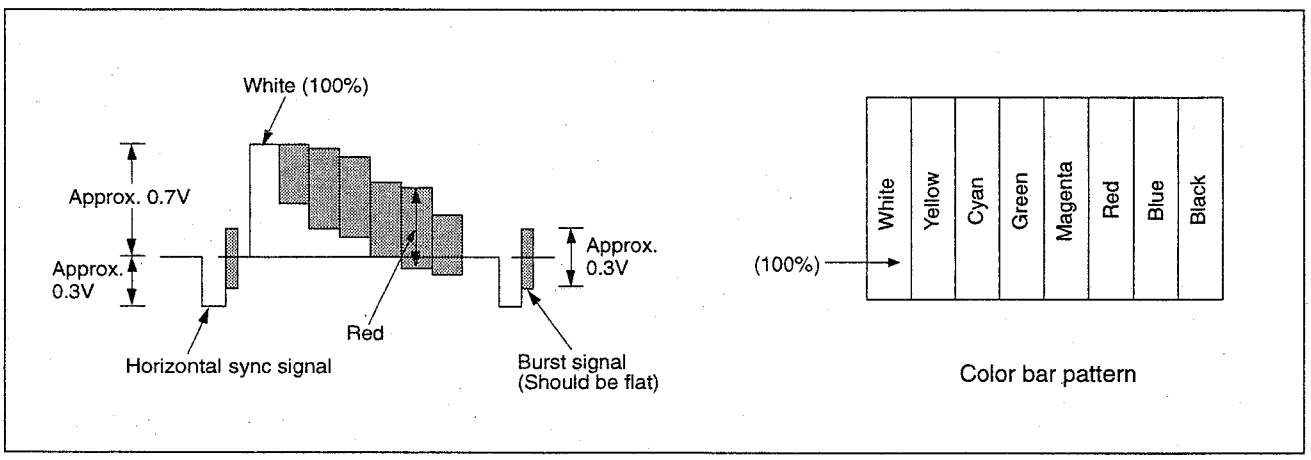

Fig. 7-2-4 Color Bar Signal of Alignment Tape

2-1-6. Input/Output Levels and Impedance

Video input : LINE-1 (EURO-AV)
Pin 20
LINE-2 IN
(phono jack) (1)
Input signal : 1Vp-p, 75ohms, unbalanced, sync negative

Video output : LINE-1 (EURO-AV)
Pin 19
LINE OUT
(phono jack) (1)
Output signal : 1Vp-p, 75ohms, unbalanced, sync negative

S VIDEO input : LINE-2 IN
(4-pin, mini-DIN) (1)
Luminance (Y) : 1Vp-p, 75ohms, unbalanced, sync negative
Chrominance (C) : 0.3Vp-p, (color burst), 75ohms, unbalanced

S VIDEO output : LINE-1 (EURO-AV)
Y : Pin 19
C : Pin 15
LINE OUT
(4-pin, mini-DIN)
Y : 1Vp-p, 75ohms, unbalanced, sync negative
C : 0.3Vp-p, (color burst), 75ohms, unbalanced

Audio input : LINE-1 (EURO-AV)
R : Pin 2
L : Pin 6
LINE-2 IN
(phono jack) (2)
Input level : –7.5dBs (0dBs=0.775Vrms)
Input impedance : more than 47kilohms

Audio output : LINE-1 (EURO-AV)
R : Pin 1
L : Pin 3
LINE OUT
(phono jack) (2)
Standard level : –7.5dBs at load impedance 47kilohms
Output impedance : less than 10kilohms

2-1-7. Recording Mode (Normal/Hi8) Select

The set selects the recording mode automatically according to the tape type.

2-1-8. Adjustment Sequence

The adjustment should be performed in the following sequence.

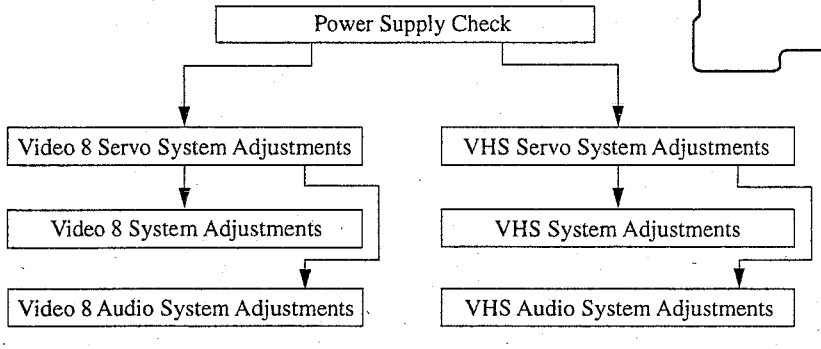

2-2. POWER SUPPLY CHECK

2-2-1. Output Voltage Check (PS-380 Board)

Mode	Playback (Both Video 8 and VHS)
Measuring Instrument	Digital voltmeter
D 6V Check	
Measurement point	CN401 pin ①, CN402 pin ①
Specified value	5.8 ± 0.1Vdc
SW 9V Check	
Measurement point	CN402 pin ③
Specified value	9.00 ± 0.25Vdc
UN 6V Check	
Measurement point	CN401 pins ④, ⑤
Specified value	5.8 ± 0.1Vdc
UNREG 13V Check	
Measurement point	CN401 pins ⑦,⑧, CN402 pins ⑩,⑪
Specified value	13.3 ± 0.3Vdc
SW –8V Check	
Measurement point	CN402 pin ⑧
Specified value	–8.4 ± 0.4Vdc
SW 5V Check	
Measurement point	CN402 pins ⑤, ⑥
Specified value	5.00 ± 0.12Vdc

[Check Method]

1) Each of these supply voltages must meet its specified value.

PS-380 BOARD (CONDUCTOR SIDE)

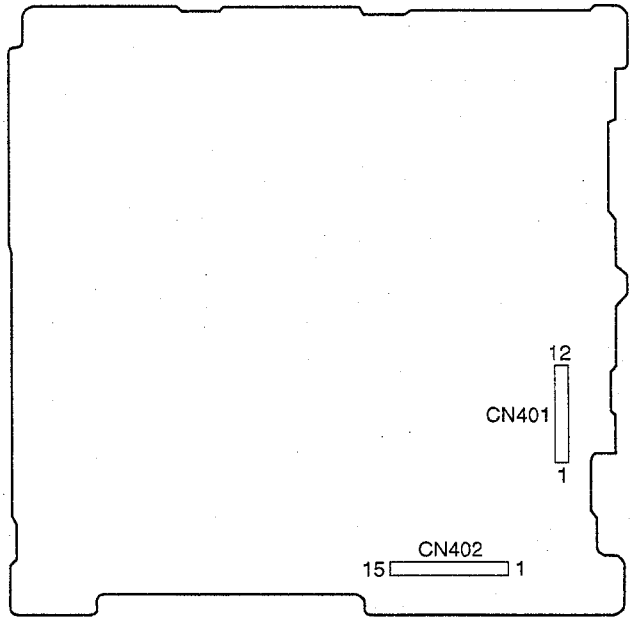

2-3. SYSTEM CONTROL/TIMER ADJUSTMENT

1. EEPROM Data Initial Value Writing

When the EEPROM (FR-113 board IC002) is replaced, write the EEPROM data initial value before starting the adjustment.
Refer to "Page D Memory Map" of section "7-1. SERVICE MODE" for the initial value.

Mode	E-E
Signal	Any signals
Adjustment page	D
Adjustment address	00 to 25, D8 to EF

Input method

1) Set the data : 01 to the page : 1, address : 00.
2) Select the page D and enter the initial values to the respective addresses.
(Be sure to press the PAUSE button after setting data (initial value) before changing the address.)

2. Timer Clock Adjustment (MV-34 Board)

Adjusts accuracy of the watch.
If this adjustment is poor, the watch will be faster or slower.

Measurement point	IC801 pin ⑧③ (JL833, CLK OUT)
Measuring instrument	Frequency counter (Interval counter mode)
Adjustment element	CT801
Specified value	0.1249995 ± 0.0000005 seconds

Note : Do not adjust CT801 unless IC801 is exchanged.

[Adjustment Method]

1) Connect IC801 pin ⑧ (JL835) to IC802 pin ⑤ (5 V). (Setting the adjustment mode)
2) Connect a frequency counter as shown below.
3) Adjust CT801 for the specified value of oscillating rate.

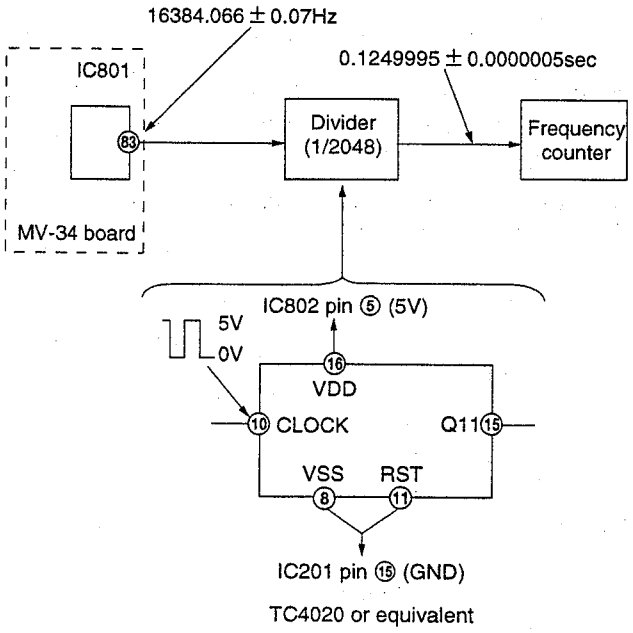

Fig. 7-2-5

2-4. Video 8 SERVO SYSTEM ADJUSTMENT

1. Switching Position Adjustment (MH-18 Board)

If deviated, the skew distortion becomes visible on playback display.

Mode	Playback
Signal	Alignment tape for tracking adjustment (WR5-1CP)
Measurement point	CH1 : CN102 pin ② (RF SWP) CH2 : CN102 pin ③ (PB RF)
Measuring instrument	Oscilloscope
Adjustment page	D
Adjustment address	12, 13
Specified value	$t_1 = 0 \pm 5\mu sec$

[Adjustment Method]

1) Set data : 01 to page : 1, address : 00.
2) Set data : 07 to page : D, address : 13.
3) Change the data of page : D address : 13 (for coarse adjustment) and address : 12 (for fine adjustment) until the switching position (t_1) satisfies the specified value.

Note : Before changing the address, be sure to press the PAUSE button of the adjustment remote commander. If it is not pressed, the new data will not be saved in memory.

4) Press the PAUSE button of the adjustment remote commander.
5) Set data : 00 to page : 1, address : 00.

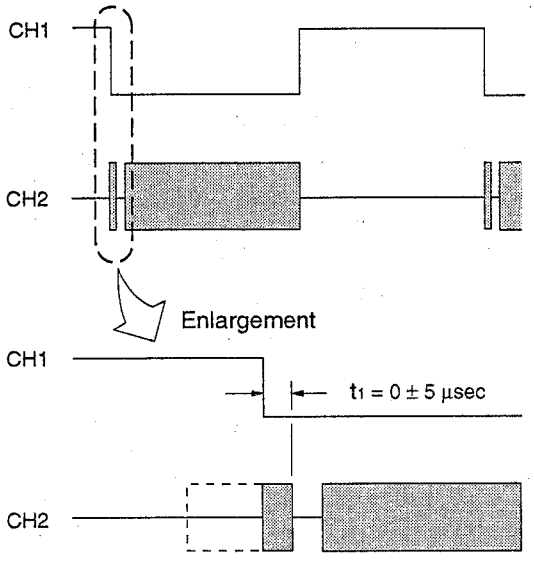

Fig. 7-2-6

2. Capstan Duty Automatic Adjustment

Adjust the duty cycle of the capstan FG signal to improve the servo characteristics. If deviated, jitter will increase.

Mode	Forced record (SP mode)

[Adjustment Method]

1) Set data : 01 to page : 1, address : 00.
2) Set data : 02 to page : 3, address : 00.
3) Set data : 07 to page : 3, address : 02.
4) Recording starts, the capstan duty is automatically adjusted and recording ends.
5) Confirm that "41 : 41 : 41" is displayed on the FL display tube.
6) Set data : 00 to page : 3, address : 02.
7) Set data : 00 to page : 3, address : 00.
8) Turn off the main power.

3. Reverse Direction SLOW Adjustment

Mode	Record and reverse direction SLOW playback (SP mode)
Signal	Color bar
Measurement point	CH1 : CN102 pin ② (RF SWP) CH2 : CN102 pin ③ (PB RF)
Measuring instrument	Oscilloscope
Adjustment page	D
Adjustment address	22
Specified value	A = B

[Adjustment Method]

1) Record the color bar signal in the SP mode.
2) Playback the recorded segment in the reverse direction SLOW mode.
   When noise appears on the playback picture, perform the following adjustment.
3) Connect the adjustment remote commander and set the HOLD switch to ON.
4) Set data : 02 to page : 3, address : 00.
5) Set data : 02 to page : 3, address : 01.
6) Change the data of page : 3, address : 1B until amplitude of the portion A and the portion B of the PB RF signal are equal. (Adjust it in the reverse direction SLOW playback mode.)
7) Take reading of the data of page : 3, address : 1B.
8) Set data : 01 to page : 1, address : 00.
9) Set the data which is read in step 7) into page : D, address : 22.
10) Press the PAUSE button of the adjustment remote commander.
11) Set data : 00 to page : 1, address : 00.
12) Set data : 02 to page : 3, address : 00.
13) Set data : 00 to page : 3, address : 01.
14) Set data : 00 to page : 3, address : 1B.

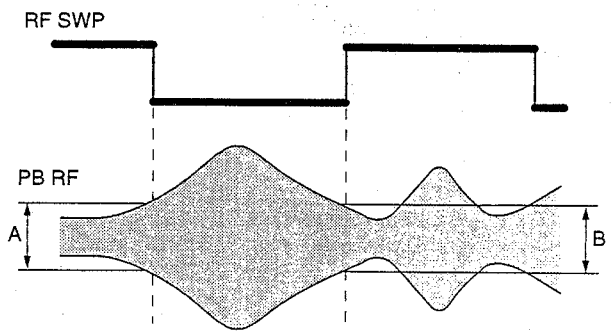

Fig. 7-2-7

4. Double Speed Playback Adjustment

Mode	Record and forward direction double speed playback (Hi8 SP mode)
Signal	Color bar
Measurement point	CH1 : CN102 pin ② (RF SWP) CH2 : CN102 pin ③ (PB RF)
Measuring instrument	Oscilloscope
Adjustment page	D
Adjustment address	24
Specified value	Noise must not appear on the playback picture.

[Adjustment Method]

1) Record the color bar signal in the Hi8 SP mode.
2) Playback the recorded segment in the forward direction double speed mode.
   When noise appears on the playback picture, perform the following adjustment.
3) Connect the adjustment remote commander and set the HOLD switch to ON.
4) Set data : 02 to page : 3, address : 00.
5) Change the data of page : 3, address : 1A until noise does not appear on the playback picture. (Adjust it in the forward direction double speed mode.)
6) Take reading of the data of page : 3, address : 1A.
7) Set data : 01 to page : 1, address : 00.
8) Set the data which is read in step 6) into page : D, address : 24.
9) Press the PAUSE button of the adjustment remote commander.
10) Set data : 00 to page : 1, address : 00.
11) Set data : 02 to page : 3, address : 00.
12) Set data : 00 to page : 3, address : 1A.

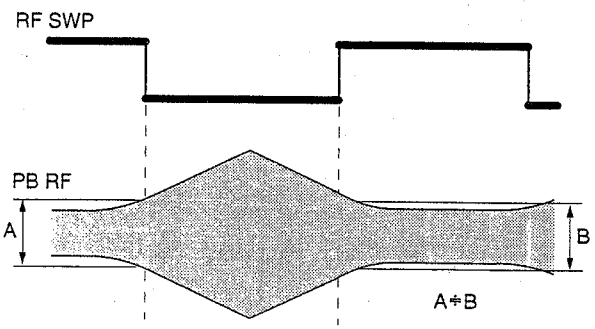

Fig. 7-2-8

2-5. Video 8 VIDEO SYSTEM ADJUSTMENT

2-5-1. Video 8 Video System Adjustment

The color bar video signal which is supplied from pattern generator is used as the video input signal for the record mode video system adjustment. Confirm that the input color bar signal conforms with the specifications specified in Fig. 7-2-2 and Fig. 7-2-3 and the section "Input Signal Check".
Set the switches of the machine to the following position unless otherwise specified.

- VHS/Video 8 selector ..... Video 8
- Input selector ..... LINE 1
- Recording time ..... SP
- LINE OUT 1 selector ..... Video 8

Perform the adjustment in the following order:

[Adjustment Order]

1) Playback Frequency Characteristics Adjustment
2) SYNC AGC Adjustment
3) Chroma Comb Filter Adjustment
4) Pre-emphasis Input Level Adjustment
5) Hi8 Mode De-emphasis Level Adjustment
6) Playback Level Adjustment
7) Normal 8 mode De-emphasis Level Adjustment
8) Normal 8 Mode Y FM Carrier Frequency
   Y FM Deviation Adjustment
9) Hi8 Mode Y FM Carrier Frequency
   Y FM Deviation Adjustment
10) Chroma Emphasis Adjustment
11) Y-FM Record Current Adjustment
12) Chroma Record Current Adjustment
13) Read Clock Adjustment
14) AFC Adjustment
15) APC Adjustment
16) CNR Gain Adjustment

1. Playback Frequency Response Adjustment (RP-211, MH-18 Boards)

Corrects the video head characteristics variation.
If deviated, the playback picture looks rough or generates over-modulation noise (black streaking noise).

Note : The adjustment for CH-2 is shown in parenthesis [ ].

Mode	Playback
Signal	Alignment tape for frequency characteristics adjustment (WR5-7NE)
Measurement point	CN102 pin ③ (PB RF) (MH-18) External trigger : CN102 pin ② (RF SWP) (MH-18) Trigger slope : – [+]
Measuring instrument	Oscilloscope
Adjustment element	RV101 [RV102] (RP-211)
Specified value	4.5MHz level versus 8.5MHz level = 3 : (2 ± 0.2)

[Adjustment Method]

1) Adjust RV101 [RV102] until the ratio of 4.5MHz level versus 8.5MHz level of the PB RF output waveform becomes 3 : (2 ± 0.2)

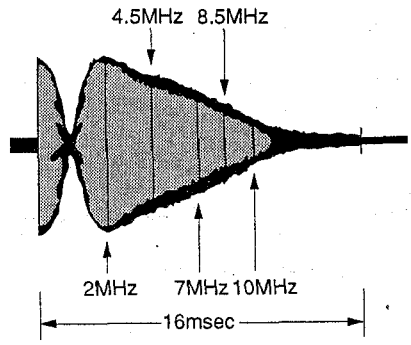

Fig. 7-2-9

2. Sync AGC Adjustment (MH-18 Board)

Adjusts the record Y signal level.
If deviated, the E-E picture or the self record/playback picture will be too bright or too dark. The color will not be reproduced correctly.

Mode	E-E
Signal	Color bar (S VIDEO)
Measurement point	CN501 pin ㉓ (8- Y OUT)
Measuring instrument	Oscilloscope
Adjustment element	RV504 (AGC)
Specified value	A = 1.00 ± 0.02Vp-p

[Adjustment Method]

1) Adjust RV504 until the Y signal level (A) satisfies the specified value.

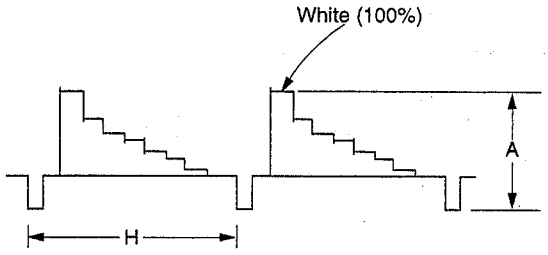

Fig. 7-2-10

3. Chroma Comb Filter Adjustment (MH-18 Board)

Adjusts the level and delay time of the chroma signal comb filter using the 1H delayed video signal.
If deviated, beat will be significant in the playback picture.

Mode	E-E
Signal	Color bar (VIDEO)
Measurement point	IC505 pin ⑭ (Y COMB OUT)
Measuring instrument	Oscilloscope
Adjustment element	RV508 (C CONB G) RV511 (C COMB P)
Specified value	Residual chroma component is minimized. (30mVp-p or less)

[Adjustment Method]

1) Adjust RV508 and RV511 alternately until the residual chroma component is minimized. (30mVp-p or less)

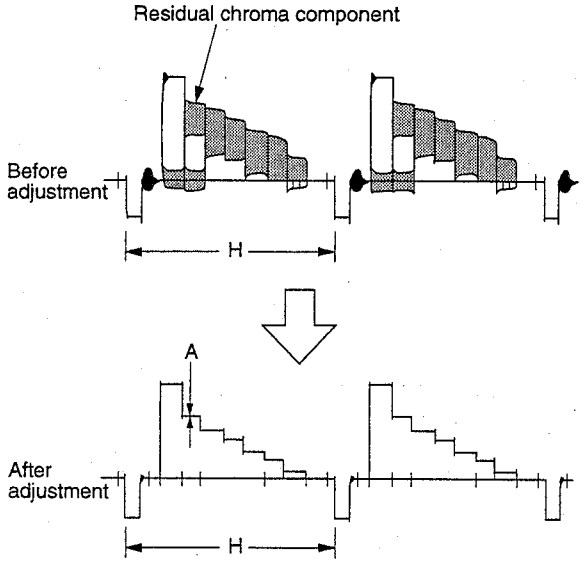

Fig. 7-2-11

4. Pre-emphasis Input Level Adjustment (MH-18 Board)

Set the level of the brightness signal before input to the emphasis circuit. Misalignment will result in excessively dark or bright recorded picture and cause smearing.

Mode	E-E
Signal	Color bar (S VIDEO)
Measurement point	IC505 pin ⑤ (EMPH IN) or IC508 pin ⑦
Measuring instrument	Oscilloscope
Adjustment element	RV513 (EMPH Y)
Specified value	A = 0.50 ± 0.02Vp-p

[Adjustment Method]

1) Use RV109 and adjust to A = 0.50 ± 0.02Vp-p.

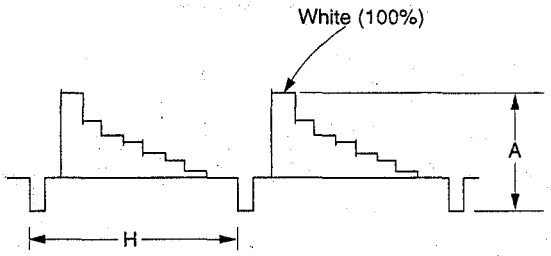

Fig. 7-2-12

5. Hi8 Mode De-emphasis Level Adjustment (MH-18 Board)

Sets the luminance De-emphasis level for Hi8 playback. If deviated, this causes excessive brightness or darkness.

Mode	Playback
Signal	Alignment tape : For operation check, color bar portion (WR5-8CSE)
Measurement point	IC505 pin ⑰ or IC507 pin ①
Measuring instrument	Oscilloscope
Adjustment element	RV512 (E DEEM)
Specified value	A = 0.50 ± 0.05Vp-p

[Adjustment Method]

1) Use RV512 to adjust to A = 0.50 ± 0.05Vp-p.

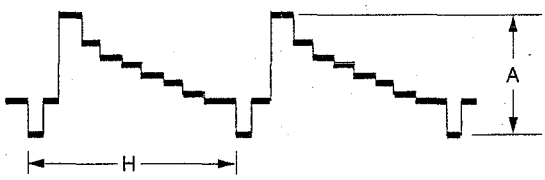

Fig. 7-2-13

6. Playback Level Adjustment (MH-18 Board)

Adjusts the playback Y signal input level.
If deviated, the playback picture will be too bright or too dark.

Mode	Playback
Signal	Alignment tape for operation check, color bar segment (WR5-8CSE)
Measurement point	CN501 pin ㉕ (8-Y OUT)
Measuring instrument	Oscilloscope
Adjustment element	RV514 (PB Y)
Specified value	A = 1.00± 0.02Vp-p

[Adjustment Method]

1) Adjust RV514 until the Y signal level (A) satisfies the specified value.

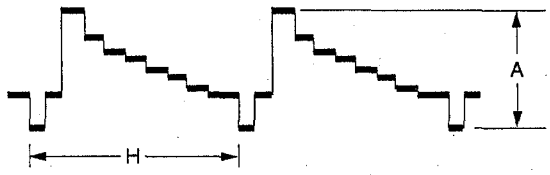

Fig. 7-2-14

7. Normal 8 Mode De-emphasis Level Adjustment (MH-18 Board)

Set the de-emphasis level of the brightness signal during normal playback. Misalignment will cause played picture to be excessively bright or dark. Black or white stretching may occur.

Mode	Playback
Signal	Alignment tape : For operation check, color bar portion (WR5-5CSP)
Measurement point	CN501 pin ㉓ (8-Y OUT)
Measuring instrument	Oscilloscope
Adjustment element	RV510 (L DEEM)
Specified value	A = 1.00 ± 0.02Vp-p

[Adjustment Method]

1) Use RV510 to adjust to A = 1.00 ± 0.02Vp-p.

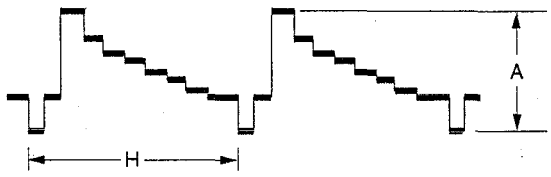

Fig. 7-2-15

8. Normal 8 Mode Y FM Carrier Frequency, Y FM Deviation Adjustment

Set the frequency deviation of the modulated brightness signal during normal mode recording. Misalignment will cause recorded picture to be excessively bright or dark. Black or white stretching may occur.

(1) Normal 8 Mode Y FM Carrier Frequency Adjustment (MH-18 Board)

Mode	E-E
Signal	No signal
Measurement point	IC505 pin ㊴ (Y RF OUT)
Measuring instrument	Frequency counter Oscilloscope
Adjustment element	RV505 (L CARR)
Specified value	4.38 ± 0.05MHz

Note : A frequency counter should be connected through a buffer amplifier (oscilloscope, etc) having a high impedance and a low capacitance.

[Adjustment Method]

1) Insert MP type cassette tape.
2) Use RV505 to adjust to 4.38 ± 0.05MHz.

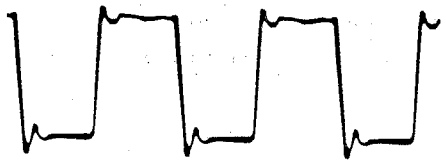

4.38 ± 0.05MHz

Fig. 7-2-16

(2) Normal 8 Mode Y FM Deviation Adjustment (MH-18 Board)

Mode	Record and playback
Signal	Color bar (S VIDEO)
Measurement point	CN501 pin ㉓ (8-Y OUT)
Measuring instrument	Oscilloscope
Adjustment element	RV506 (L DEV)
Specified value	Playback level should be at 1.00 ± 0.03Vp-p

[Adjustment Method]

1) Insert MP type cassette tape.
2) Record color bar signal.
3) Play back the recorded signal.
4) Check the playback output level.
   Specification : 1.00 ± 0.03Vp-p
5) If the specification is not met, rotate RV506 as directed below and then repeat Steps 2) to 4).

	Direction of Rotating RV506
Over specified value	Clockwise (↻)
Below specified value	Counterclockwise (↺)

6) Perform "Normal 8 Mode Y FM Carrier Frequency Adjustment".

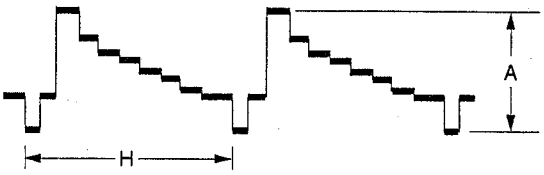

Fig. 7-2-17

9. Hi8 Mode Y FM Carrier Frequency, Y FM Deviation

9. Hi8 Mode Y FM Carrier Frequency, Y FM Deviation Adjustment

Set the frequency deviation of the modulated brightness signal during Hi8 mode recording. Misalignment will cause recorded picture to be excessively bright or dark. Black or white stretching may occur.

(1) E Mode Y FM Carrier Frequency Adjustment (MH-18 Board)

Mode	E-E
Signal	No signal (select Line in)
Measurement point	IC505 pin ㊴ (Y RF OUT)
Measuring instrument	Frequency counter Oscilloscope
Adjustment element	RV502 (E CARR)
Specified value	5.96 ± 0.05MHz

Note : A frequency counter should be connected through a buffer amplifier (oscilloscope, etc) having a high impedance and a low capacitance.

[Adjustment Method]

1) Insert ME type cassette tape.
2) Use RV502 to adjust to 5.96 ± 0.05MHz.

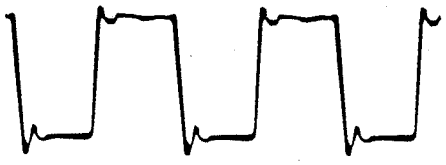

5.96 ± 0.05MHz

Fig. 7-2-18

(2) Hi8 Mode Y FM Deviation Adjustment (MH-18 Board)

Mode	Record and playback
Signal	Color bar (S VIDEO)
Measurement point	CN503 pin ㉓ (8-Y OUT)
Measuring instrument	Oscilloscope
Adjustment element	RV503 (E DEV)
Specified value	Playback level should be at 1.00 ± 0.03Vp-p

[Adjustment Method]

1) Insert ME type cassette tape.
2) Record color bar signal.
3) Play back the recorded signal.
4) Check the playback output level.
   Specification : 1.00 ± 0.03Vp-p
5) If the specification is not met, rotate RV503 as directed below and then repeat Steps 1) to 4).

	Direction of Rotating RV503
Over specified value	Clockwise (↻)
Below specified value	Counterclockwise (↺)

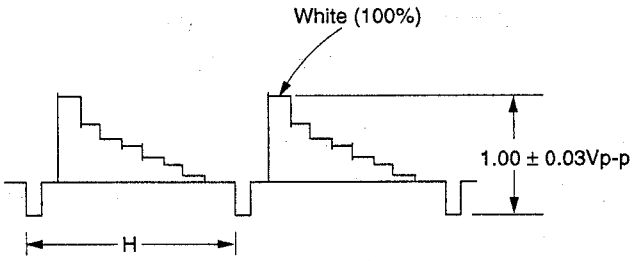

Fig. 7-2-19

10. Chroma Emphasis Adjustment (MH-18 Board)

Adjusts the center frequency of chroma emphasis.
If deviated, color of the playback picture will be abnormal.

Mode	Record
Signal	Color bar
Measurement point	IC505 pin ⑧ (B. EMPH OUT)
Measuring instrument	Oscilloscope
Adjustment element	RV507 (C EMPH)
Specified value	The fo component is minimum.

[Adjustment Method]

1) Connect the adjustment remote commander. Set the HOLD switch to ON position.
2) Set data: 02 to page: 3, address: 00.
3) Set data: 04 to page: 3, address: 01.
4) Adjust RV507 until the latter half period of the chroma's yellow signal is minimized.
5) Set data: 00 to page: 3, address: 01.
6) Set the HOLD switch to OFF position.

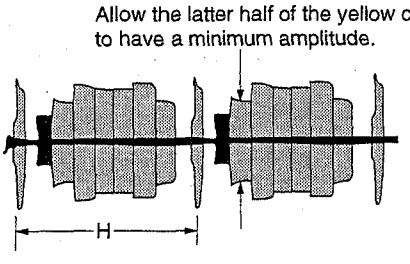

Fig. 7-2-20

11. Recording Y FM Level Adjustment (MH-18 Board)

Set the level of Y FM signal to be recorded on tape. Shift to lower level will result in deteriorated S/N ratio of self-recorded picture. Shift to higher level will cause over-modulation noise (black stretching noise) on self-recorded picture.

Mode	E-E
Signal	No signal
Measurement point	Q518 emitter or IC101 pin ⑥ (REC Y RF)
Measuring instrument	Oscilloscope (20MHz bandwidth)
Adjustment element	RV501
Specified value	A = 250 ± 3mVp-p

Note : Set an oscilloscope to 20MHz bandwidth.

[Adjustment Method]

1) Insert ME tape.
2) Use RV501 to adjust to A = 250 ± 3mVp-p.

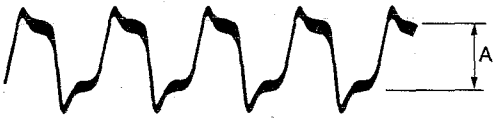

Fig. 7-2-21

12. Recording Chroma Level Adjustment (MH-18 Board)

Set the level of the chroma signal to be recorded on tape. Shift to lower level will result in deteriorated S/N ratio of the chroma signal of self-recorded picture.
Shift to higher level will result in deteriorated S/N ratio of the Y signal in darker color portion of self-recorded picture and cause white stretching noise.

Mode	E-E
Signal	Color bar
Measurement point	Q536 emitter
Measuring instrument	Oscilloscope (20MHz bandwidth)
Adjustment element	RV509 (REC C)
Specified value	Adjust so that the red color portion of the chroma signal is at 160 ± 2mVp-p.

[Adjustment Method]

1) Insert ME type cassette tape.
42) Adjust RV509 so that the flat portion of the chroma signal red component has the level 160 ± 2mVp-p.

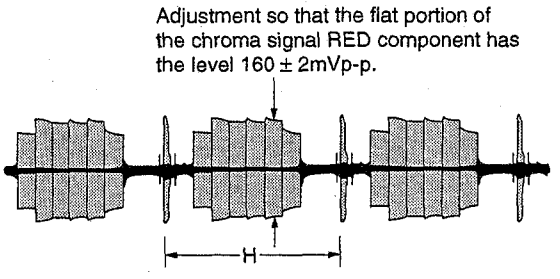

Fig. 7-2-22

2-6. Video 8 AUDIO SYSTEM ADJUSTMENT

- The color bar video signal is used as the video input signal for the audio system adjustment.
- Set the switches of the machine to the following position unless otherwise specified.

VHS/Video 8 selector ..... Video 8
Input selector ..... LINE 1
LINE OUT 1 selector ..... Video 8
Recording time ..... SP
Video 8 audio input (note 1) ..... Stereo
Audio monitor (note 2)
When stereo tape is played back ..... Stereo
When bilingual tape is played back ..... Main/left channel

Note 1 : Set from the menu display.
Note 2 : Set from remote commander.

[Connection of Equipment for Audio Measurement]
In addition to equipment for video measurement, the audio measurement equipment should be illustrated in Fig. 7-2-23.

Note 3 : Feed the same signal to both L- and R-channels unless otherwise specified when inputting audio signal.
Note 4 : For the adjustment item in which both L- and R-channels are adjusted, the R-channel adjustment item is shown in [ ].

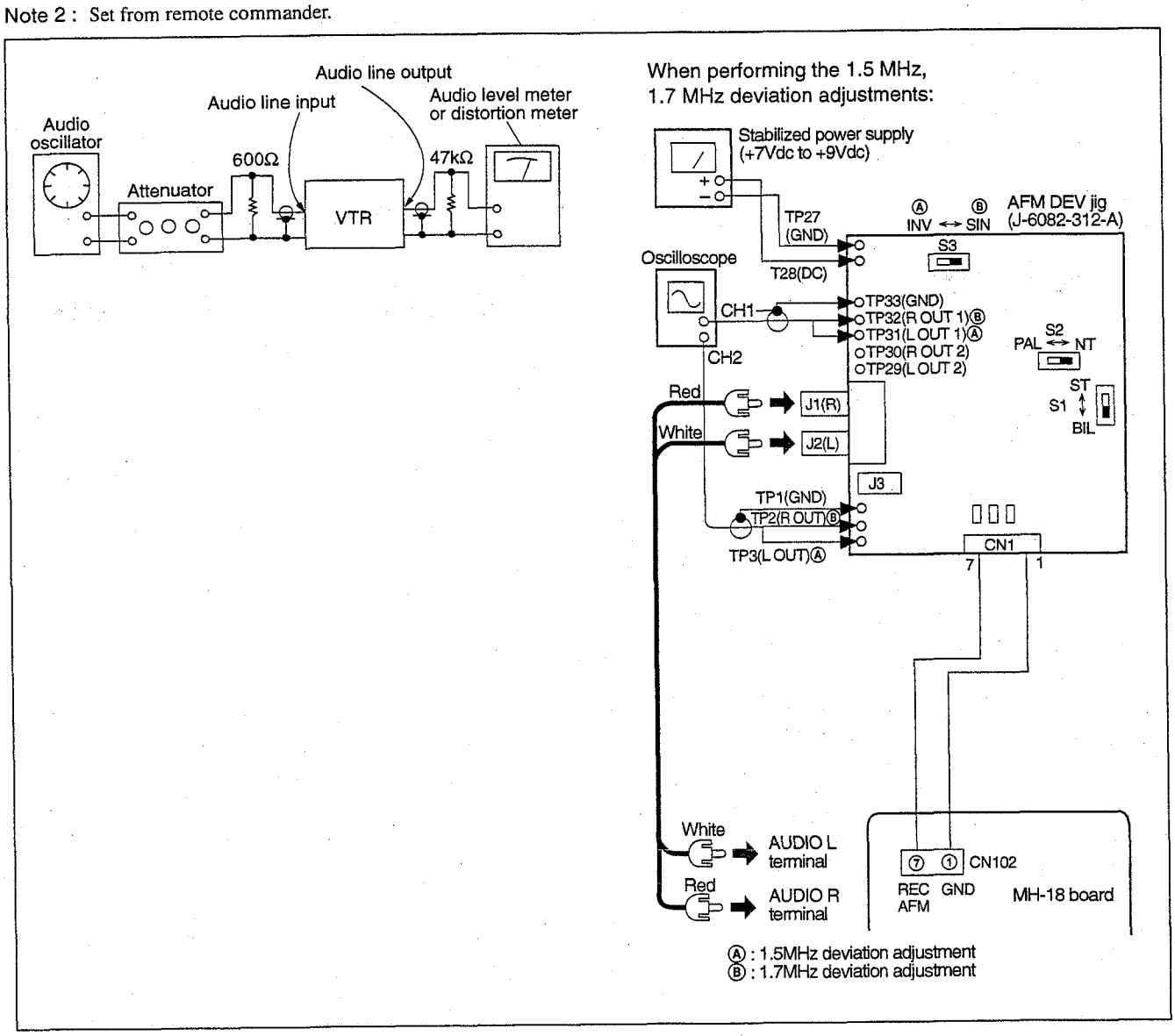

Fig. 7-2-23

2-6-1. Video 8 Audio System Adjustment

[Adjustment Order]

1) 1.5 MHz Carrier Frequency and Level Check
2) 1.5 MHz Deviation Adjustment
3) 1.7 MHz Deviation Adjustment
4) Band-pass Filter Adjustment
5) E-E Output Level Check
6) Overall Frequency Response Characteristics Check
7) Over Level Characteristics and Distortion Check
8) Overall Noise Level Check
9) Separation Adjustment

1. 1.5 MHz Carrier Frequency and Level Check (MH-18 Board)

Mode	Record
Signal	No signal
Measurement point	CN102 pin ⑦ (REC AFM)
Measuring instrument	Frequency counter and oscilloscope (Note 1)
Specified value	Level : A = 165 ± 20mVp-p Frequency : f = 1500.3 ± 3 kHz

Note 1 : Use the high impedance (1MΩ or more) and low capacitauce (20pF or less) probe.
Note 2 : Connect IC201 pin ㊽ with GND using jumper.

[Check Method]

1) Confirm that frequency and level of the 1.5MHz carrier signal satisfies the specified value.

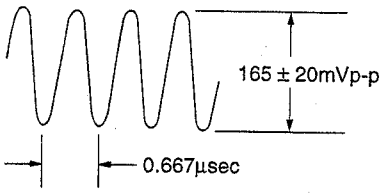

Fig. 7-2-24

2. 1.5 MHz Deviation Adjustment (MH-18 Board)

Sets the spectrum of the L-channel (L + R/2 signal) which is modulated during recording. If deviated, audio signal crosstalk during record and playback deteriorate and the audio level will decrease.

Mode	Record
Signal	Connect the AFM DEV adjustment jig output signal to the audio LINE IN 1 terminal left and right channels.
Measurement point	CH1 : TP31 of AFM DEV adjustment jig CH2 : TP3 of AFM DEV adjustment jig
Measuring instrument	Oscilloscope ADD mode CH2 INV mode
Adjustment element	RV203 (1.5M DEV)
Specified value	The level difference between CH1 and CH2 signals must be 40mV or less.

[Connection]

1) Connect CN2 of the AFM DEV adjustment jig to CN102 of the MH-18 board.
2) Connect the audio output terminal (J1, J2) of the AFM DEV adjustment jig to audio LINE IN 1 terminal of this machine.
3) Connect DC power supply (+7 to +9Vdc) to TP28 (DC) and TP27 (GND) of the AFM DEV adjustment jig.
4) Set the switches of the AFM DEV adjustment jig tot he following positions.
   S1 ..... ST position
   S2 ..... NT position
   S3 ..... SIN position

[Adjustment Method]

1) Calibrate the CH1 and CH2 VERT GAIN of an oscilloscope to the unity gain.
2) Set an oscilloscope to ADD mode and set CH2 to INV mode.
3) Adjust RV203 for minimum audio level difference between CH1 and CH2.

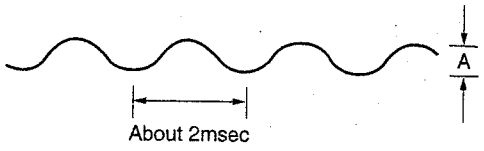

Fig. 7-2-25

3. 1.7 MHz Deviation Adjustment (MH-18 Board)

Sets the spectrum of the R-channel (L-R/2 signal) which is modulated during recording. If deviated, audio signal crosstalk during record and playback deteriorate and the audio level will decrease.

Mode	Record
Signal	Connect the AFM DEV adjustment jig output signal to the audio LINE IN 1 terminal left and right channels.
Measurement point	CH1 : TP32 of AFM DEV adjustment jig CH2: TP2 of AFM DEV adjustment jig
Measuring instrument	Oscilloscope ADD mode CH2 INV mode
Adjustment element	RV201 (1.7M DEV)
Specified value	The level difference between CH1 and CH2 signals must be 40mV or less.

[Connection]

1) Connect CN2 of the AFM DEV adjustment jig to CN102 of the MH-18 board.
2) Connect the audio output terminal (J1, J2) of the AFM DEV adjustment jig to audio LINE IN 1 terminal of this machine.
3) Connect DC power supply (+7 to +9Vdc) to TP28 (DC) and TP27 (GND) of the AFM DEV adjustment jig.
4) Set the switches of the AFM DEV adjustment jig tot he following positions.
   S1 ..... ST position
   S2 ..... NT position
   S3 ..... INV position

[Adjustment Method]

1) Calibrate the CH1 and CH2 VERT GAIN of an oscilloscope to the unity gain.
2) Set an oscilloscope to ADD mode and set CH2 to INV mode.
3) Adjust RV201 for minimum audio level difference between CH1 and CH2.

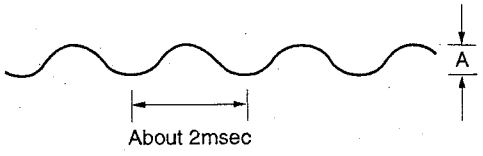

Fig. 7-2-26

4. Band-pass Filter Adjustment (MH-18 Board)

Adjusts the pass band frequency of the band-pass filter so that the AFM signal can be correctly separated from the playback RF signal. If deviated, identification error of monaural and stereo can occur, and noise and distortion will increase when playing back a large sound.

Mode	Playback
Signal	Alignment tape For AFM deviation check (WR5-9CS)
Measurement point	Audio LINE OUT 1 terminal, left or right channel
Measuring instrument	Audio distortion meter
Adjustment element	RV202 (BPF ADJ)
Specified value	The right and left channels must have the same amount of distortion (0.1% or less) with minimum distortion (1 to 1.5%)

[Adjustment Method]

1) Select the "MAIN/LEFT" channel using the "AUDIO MONITOR" button of the remote commander.
2) Adjust RV202 for minimum distortion.
3) Select the "MAIN/RIGHT" channel using the "AUDIO MONITOR" button of the remote commander.
4) Adjust RV202 for minimum distortion.
5) Repeat steps from 1) to 4) until the right and left channels must have the same amount of distortion with minimum distortion.

5. E-E Output Level Check (MH-18 Board)

Mode	E-E
Signal	400 Hz, –7.5 dBs Audio LINE IN 1 terminal, Right [Left]
Measurement point	Audio LINE OUT terminal, Right [Left]
Measuring instrument	Audio level meter
Specified value	–7.5 ± 3dBs

[Check Method]

1) Confirm that the 400Hz signal level satisfies the specified value.

6. Overall Frequency Characteristic Check

Note : Measurement point during SUB channel check is shown in [ ].

Mode	Self-record playback (Bilingual mode) (Note 1, Note 2)
Signal	Ⓐ 400Hz, –17.5dBs Ⓑ 20Hz, –17.5dBs Ⓒ 14kHz, –17.5dBs : Audio Line Input terminals, left and right
Measurement point	Audio Line Output terminals, left and right
Measuring instrument	Audio level meter
Specified value	The playback output levels of 20Hz should be –3 ± 3dB and 14kHz should be 0 ± 3dBs with 400Hz playback output level at 0dBs.

Note 1 : Bilingual mode recording.
Select "STEP UP MENU 2", "Video 8 AUDIO L IN : BIL" on the menu screen and press "EXECUTE" button.
Note 2 : Select "MAIN/SUB" by pressing "AUDIO MONITOR" button of the remote commander.

[Check Method]

1) Record signals A to C in turn in bilingual mode. (Note 1)
2) Play back the recorded portion. (Note 2)
3) Check that the frequency response characteristics satisfies the specified value.

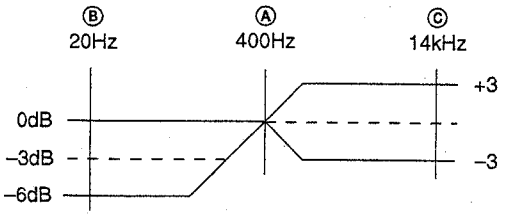

Fig. 7-2-27

7. Overall Distortion Factor, Level Check

Note : Measurement point and specified value during SUB channel check are shown in [ ].

Mode	Self-record playback (Bilingual mode) (Note 1, Note 2)
Signal	400Hz, –17.5dBs : Audio Line Input terminals, left and right
Measurement point	Audio Line Output terminals, left [right]
Measuring instrument	Audio level meter and audio distortion meter
Specified value	Level : –7.5 ± 3dBs [–7.5 ± 3dBs] Distortion : 1.0% or less [1.5% or less] (Note 3)

Note 1 : Bilingual mode recording.
Select "STEP UP MENU 2", "Video 8 AUDIO L IN : BIL" on the menu screen and press "EXECUTE" button.
Note 2 : Select "MAIN/SUB" by pressing "AUDIO MONITOR" button of the remote commander.

[Check Method]

1) Record signal in bilingual mode. (Note 1)
2) Play back the recorded portion. (Note 2)
3) Check that the distortion factor satisfies the specified value.

Note 3 : These are values when a 200Hz-6kHz BPF is used.

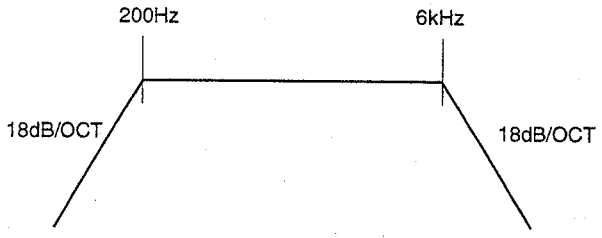

Fig. 7-2-28

8. Overall Noise Level Check

Note : Measurement point and specified value during SUB channel check are shown in [ ].

Mode	Self-record playback (Bilingual mode) (Note 1, Note 2)
Signal	No signal (Audio Line Input jacks 2, left and right) (Note 3)
Measurement point	Audio Line Output terminals, left [right]
Measuring instrument	Audio level meter (Using IHF-A weighting filter)
Specified value	– 68dBs or less [– 65dBs or less]

Note 1 : Bilingual mode recording.
Select "STEP UP MENU 2", "Video 8 AUDIO L IN : BIL" on the menu screen and press "EXECUTE" button.
Note 2 : Select "MAIN/SUB" by pressing "AUDIO MONITOR" button of the remote commander.
Note 3 : Insert a shorting plug into the Audio Line Input Jacks : left and right.

1) Record signal in bilingual mode. (Note 1)
2) Play back the recorded portion. (Note 2)
3) Check that the noise level satisfies the specified value.

9. Separation Check

Mode	Self-record playback
Signal	No signal : Audio LINE IN 1 terminal left [right] 400 Hz, –7.5 dBs : Audio LINE IN 1 terminal left [right]
Measurement point	Audio LINE OUT 1 terminal left [right]
Measuring instrument	Audio level meter (using IHF-A curve weighting filter)
Specified value	–27.5dBs or less

Note : The point in parenthesis [ ] is the measurement point for the right channel.

[Check Method]
1) Insert t shorting plug into the Audio LINE IN 1 terminal left [right]. Input 400 Hz signal at –7.5 dBs to Audio LINE IN 1 terminal right [left] only.
2) Record the signal.
3) Playback the recorded portion.
4) Confirm that the crosstalk level (400 Hz) of the Audio LINE OUST 1 terminal left [right] is –27.5 dBs or less.

2-7. SERVO SYSTEM CHECK

1. RF Switching Position Adjustment (MV-34, RV-50 Boards)

To adjust the link of the A-ch and B-ch of the tape playback outputs. To make the unit compatible with other tapes and units. If this specification is not satisfied, the link will appear on the screen and the screen will be disrupted, etc.

Mode	Playback
Signal	Alignment tape: SP color bar portion (KRV-51P)
Measurement point	CH1 : Video LINE OUT terminal CH2 : CN002 pin ③ (RF SWP) (RV-50 board)
Measuring instrument	Oscilloscope
Adjustment element	RV202 (RF SW POS)
Specified value	6.5 ± 0.5H (416 ± 32 µsec)

[Adjustment Method]
1) Short-circuit between CN101 pin ① and pin ③ on MV-34 board for about 1 second to activate the RF switching position adjustment mode.
2) Check that "ADJ-RF" is indicated on FL display.
3) Using the program + and – buttons, adjust to 6.5 ± 0.5H (416 ± 32 µsec).
4) Press the PAUSE button.
5) Press the EJECT button.

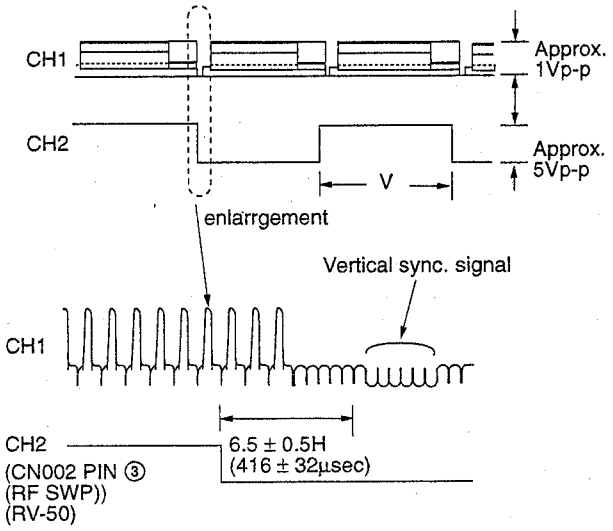

Fig. 7-2-29

2-8. VHS VIDEO SYSTEM CHECKS

Perform the VHS video system adjustment in the following order as a principle:
The color bar video signal which is supplied from pattern generator is used as the video input signal for the record mode video system adjustment. Confirm that the input sync signal and the color burst signal conform with the specifications specified in Fig. 7-2-2 and Fig. 7-2-3 and the section "Input Signal Check".
Set the switches of the machine to the following position unless otherwise specified.

- VHS/Video 8 selector ..... VHS
- Input selector ..... LINE 1
- Recording time ..... Standard (SP)
- LINE OUT 1 selector ..... VHS

Perform the adjustment in the following order:

[Checking Sequence]
1) X'tal OSC Check
2) SYNC AGC Check
3) White clip/Dark clip Check
4) Recording Y Level Check
5) Recording Chroma Level Check
6) Playback Level Check

1. X'tal OSC Check (RV-50 Board)

Mode	Playback
Signal	Alignment tape: SP Color bar portion
Measurement point	Q514 emitter
Measuring instrument	Oscilloscope and Frequency counter
Specified value	4,433,619 ± 96Hz

Note: A frequency counter should be connected through a buffer amplifier (oscilloscope, etc.) having a high impedance and a low capacitance.

[Check Method]
1) Check that the oscillation frequency satisfies the specified value and that the oscillation voltage is 320 ± 140mVp-p.

4,443,619 ± 96Hz

Fig. 7-2-30

2. SYNC AGC Check (RV-50 Board)

Mode	E-E
Signal	Color bar
Measurement point	IC501 pin ⑪
Measuring instrument	Oscilloscope
Specified value	A=2.02 ± 0.14Vp-p

[Check Method]
1) Check that the Video signal level (A) satisfies the specified value.

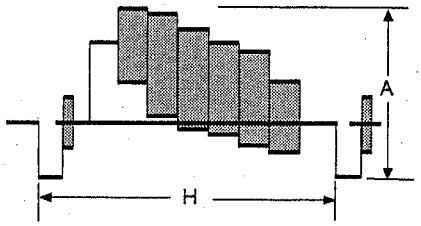

Fig. 7-2-31

3. White Clip/Dark Clip Check (RV-50 Board)

Mode	E-E
Signal	Color bar
Measurement point	IC501 pin ㊽
Measuring instrument	Oscilloscope
Specified value	White clip : 190 ± 15% Dark clip : 52 ± 10%

[Check Method]
1) Check that the white clip level is 190 ± 15% to the white (100%) level.
2) Check that the dark chip level is 50 ± 10% to the white (100%) level.

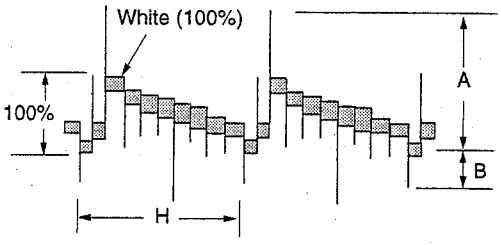

Fig. 7-2-32

4. Recording Y Level Check (RV-50 Board)

Mode	E-E
Signal	No-signal
Measurement point	Q921 emitter
Measuring instrument	Oscilloscope
Specified value	A=1000 ± 100mVp-p

[Check Method]

1) Check that the recording RF signal satisfies the specified value.

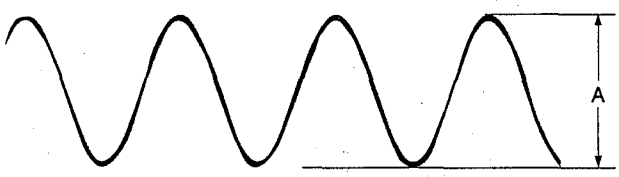

Fig. 7-2-33

5. Recording Chroma Level Check (RV-50 Board)

Mode	Recording
Signal	Color bar
Measurement point	Q508 emitter
Measuring instrument	Oscilloscope
Specified value	A=190 ± 20mV

[Check Method]

1) Confirm the amplitude of recording chroma level becomes the specified value.

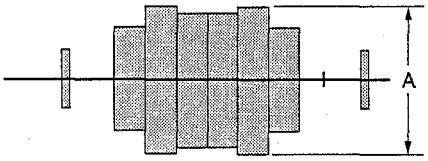

Fig. 7-2-34

6. Playback Level Check (RV-50 Board)

Mode	Playback
Signal Alignment	Alignment tape : SP mode color bar portion
Measurement point	Video LINE OUT terminal
Measuring instrument	Oscilloscope
Specified value	A=1.00 ± 0.02Vp-p

[Check Method]

1) Check that the playback level satisfies the specified value.

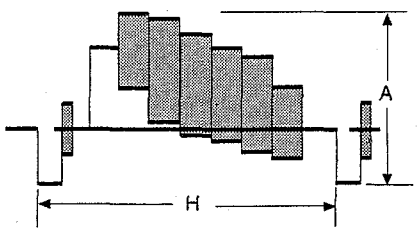

Fig. 7-2-35

2-9. VHS AUDIO SYSTEM ADJUSTMENT

Equipment connection

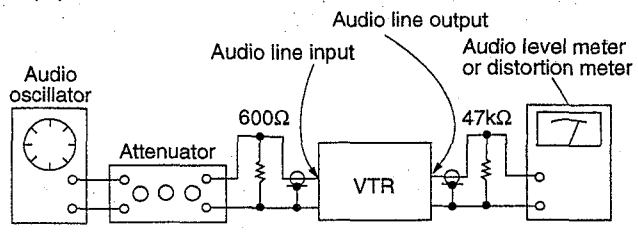

(Input signal to both L and R channels at the same time.)
600Ω : 270 (1-249-410-11) + 330(1-249-411-11)
47k : 1-249-437-11

Fig. 7-2-35

2-9-1. HiFi Audio System Adjustment

Set the switches of the machine to the following position unless otherwise specified.

- VHS/Video 8 selector ..... VHS
- Input selector ..... LINE 1
- Audio monitor ..... Stereo
- Recording time ..... Standard (SP)
- LINE OUT 1 selector ..... VHS

Note : *Audio monitor is switched by the remote commander during playback.*

[Adjustment Order]

1) VCO fo Adjustment
2) Band-pass Filter fo Adjustment
3) Switching Position Adjustment
4) E-E Output Level Check
5) Overall Level Check

1. VCO F0 Adjustment (MV-34 Board)

To attain HiFi audio compatibility.
If this specification is not satisfied, the sound will be distorted.

Mode	Recording
Signal	No-signal
Measuring instrument	Frequency counter
1.8MHz adjustment	
Measurement point	CN301 pin ⑮
Adjustment element	RV603 (R-ch)
Specified value	1800±1kHz
1.4 MHz adjustment	
Measurement point	CN301 pin ⑮
Adjustment element	RV601 (L-ch)
Specified value	1400±1kHz

Note : Connect the frequency counter through the buffer amplifier (oscilloscope, etc) with high input resistance (1MΩ or more) and low capacity (10pF or less).
Before 1.4MHz adjustment, connect the RV603, R609 side to ground, and after the adjustment disconnect above mentioned connection.

[Adjustment Method]

1) Connect the frequency counter with each measurement points.
2) Adjust with RV601 and RV603 so that the frequency satisfies each specified value.

2. Band Pass Filter f0 Adjustment (MV-34 Board)

To separate the carrier accurately and ensure that the filter for cutting the video signal functions normally.
If this specification is not satisfied, the sound will be distorted.

Mode	Playback
Signal	Alignment tape SP color bar or monoscope portion
Measurement point	CN301 pin ⑮
Measuring instrument	Oscilloscope
Adjustment element	RV602
Specified value	See the figure below.

[Adjustment Method]

Adjust the L-ch and R-ch amplitudes to the same level.
(Make the waveform flat.)

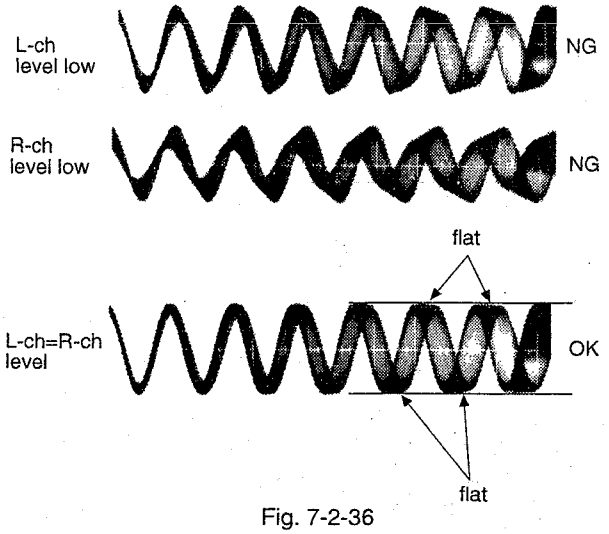

Fig. 7-2-36

3. AF Switching Position Adjustment (MV-34, RV-50 Boards)

To adjust the link of the A-ch and B-ch of the tape playback outputs.
If this specification is not satisfied, the noise will increase and cracking sounds will be produced.

Mode	Playback
Signal	Alignment tape: SP color bar portion
Measurement point	CH1 : JL101 (BPF MONI)(RV-50) CH2 : CN002 pin ③ (RF SWP) (RV-50)
Measuring instrument	Oscilloscope
Specified value	No dropouts in the RF signal

[Adjustment Method]

1) Short-circuit between CN101 pin ① and pin ③ on MV-34 board for about 1 second to activate the RF switching position adjustment mode.
2) Press the REC button to activate the AF switching position adjustment mode.
3) Check that "ADJ-HF" is indicated on FL display.
4) Using the program + and – buttons, minimize a chipped portion. At this time, confirm that a noisy sound is not heard.
5) Press the PAUSE button.
6) Press the EJECT button.

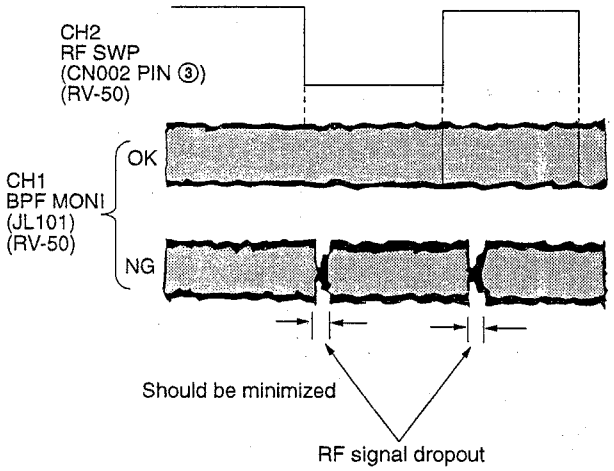

Fig. 7-2-37

2-9-2. Normal Audio System Adjustment

- For the adjustment of the audio system, perform in the SP mode if there is no special notes. Use the alignment tape.

[Connecting Instruments]

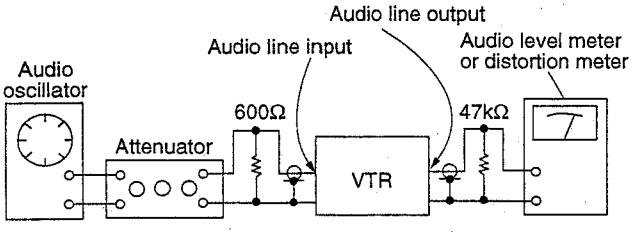

Fig. 7-2-38

- Adjust in the SP mode if there is no special indications.
- Perform the adjustment setting the switch on the following positions.
- CHANNEL switch ..... LINE 1

[Adjustment Method]

1. ACE head adjustment.....Refer to the VHS mechanical adjustment manual Ⅳ.
2. E-E output level check
3. Overall Output level and distortion factor check
4. Overall noise level check.

1. ACE Head Adjustment

Refer to the "VHS mechanical adjustment manual Ⅳ" (9-973-623-11).

2. E-E Output Level Check

Mode	E-E
Signal	400Hz, –7.5dBs : CNJ202 L/R (FL-79)
Measurement point	J901 L/R (MV-34)
Measuring instrument	Audio level meter
Specified value	–7.5 ± 2dBs

[Check Method]

1) Input signal of 400Hz and –7.5dBs to the CNJ202 L/R.
2) Check that the audio output level is –7.5 ± 2dBs.

3. Overall Output Level and Distortion Factor Check

Mode	Self-record playback
Signal	400Hz, –7.5dBs : CNJ202 L/R (FL-79)
Measurement point	J901 L/R (MV-34)
Measuring instrument	Audio level meter and Distortion meter
Specified value	Playback Level : –7.5 ± 3dBs Distortion: 4.0% or less

[Check Method]

1) Input signal of 400Hz and –7.5dBs to the audio input.
2) Record signal.
3) Playback the recorded portion.
4) Check that the output level is –7.5 ± 3dBs.
5) Check that the distortion factor is 4.0% or less.

4. Overall Noise Level Check

Mode	Self-record playback
Signal	No signal (Insert a shorting plug into the Audio LINE IN terminal)
Measurement point	J901 L/R (MV-34)
Measuring instrument	Audio level meter (IHF-A weighing filter is used)
Specified value	– 45.5dBs or less

[Check Method]

1) Record.
2) Playback recorded portion.
3) Check that noise level is – 45.5dBs or less.

2-10. ADJUSTING PARTS LOCATION

RP-211 BOARD (COMPONENT SIDE)

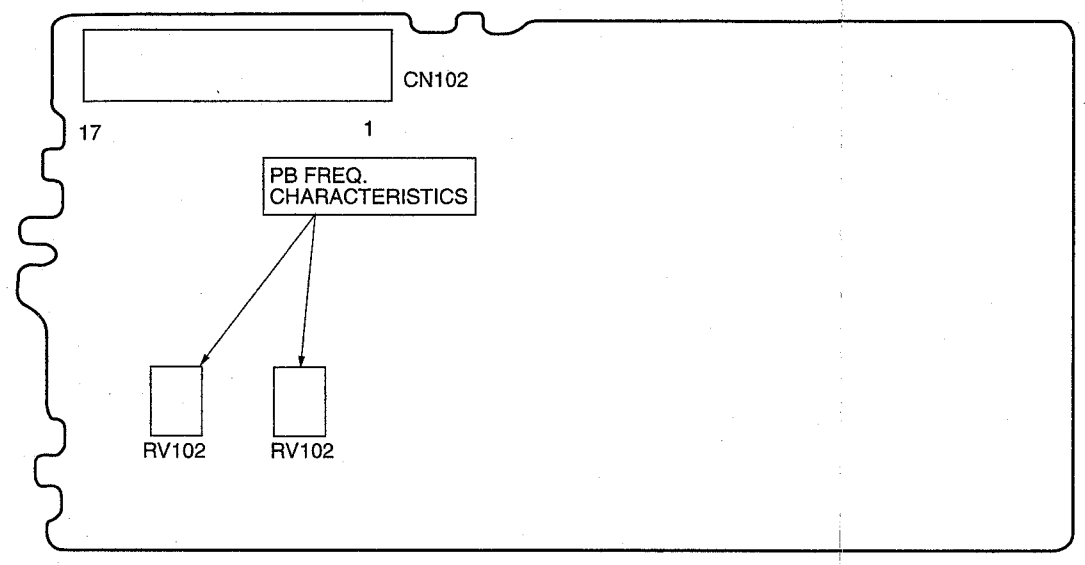

MH-18 BOARD (CO

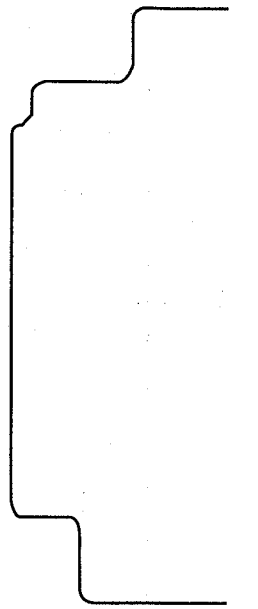

RV-50 BOARD (COMPONENT SIDE)

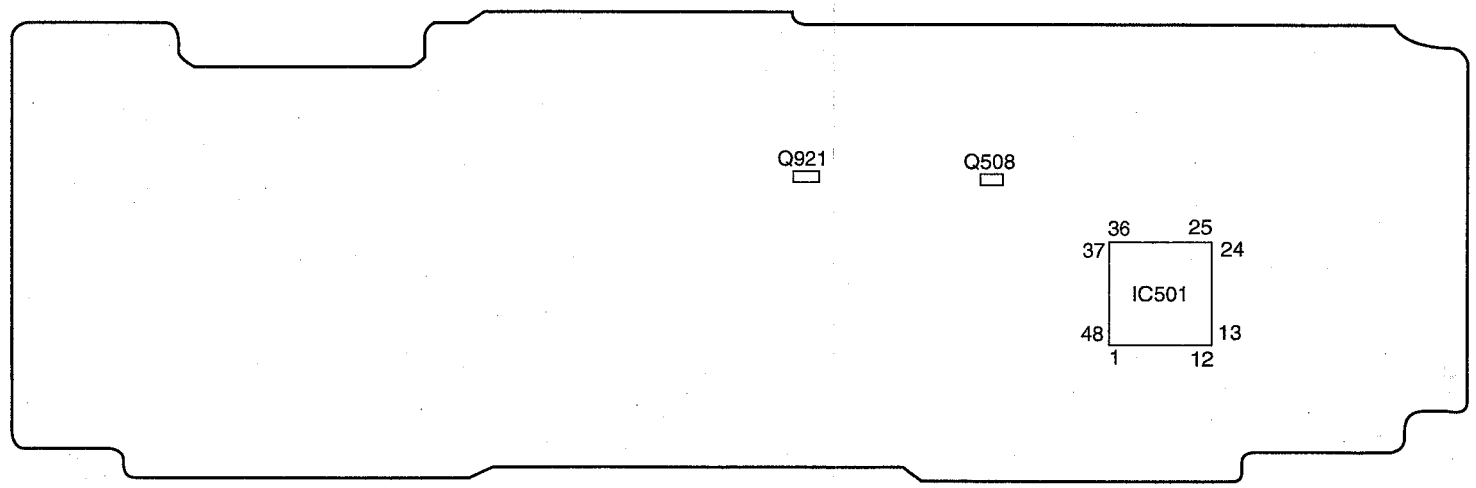

RV-50 BOARD (CONDUCTOR SIDE)

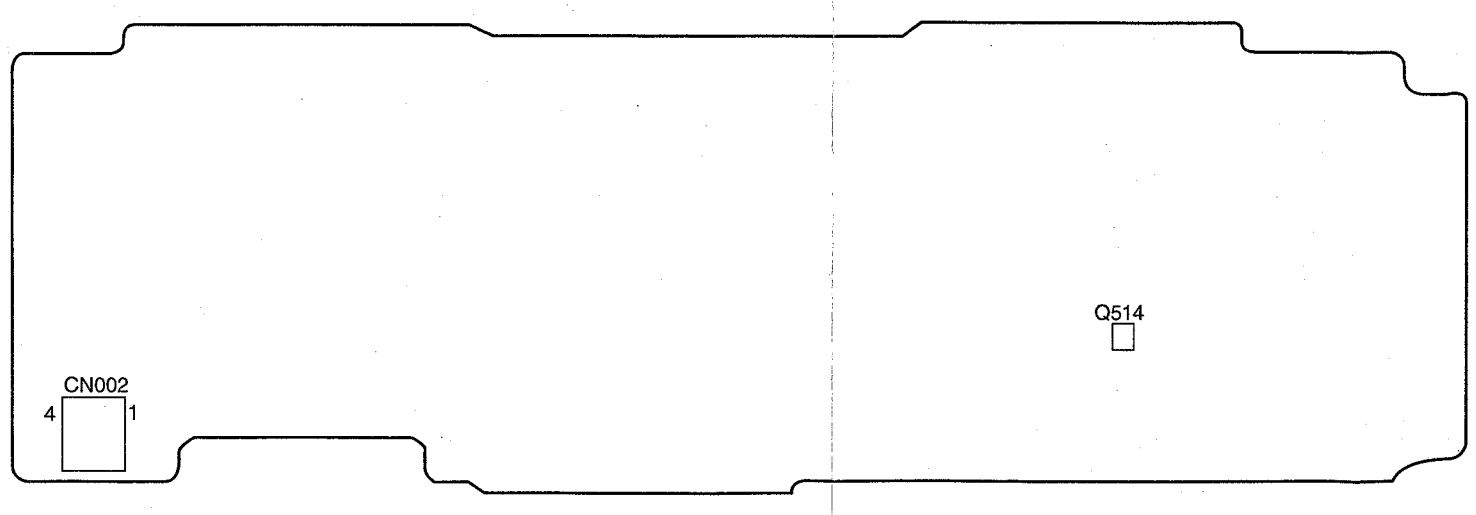

2-10. ADJUSTING PARTS LOCATION

RP-211 BOARD (COMPONENT SIDE)

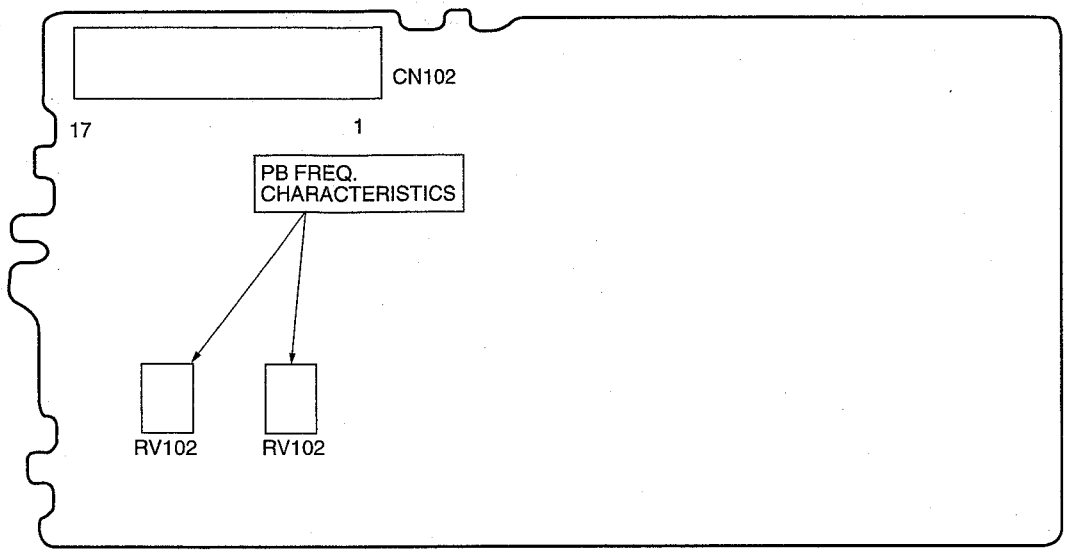

RV-50 BOARD (COMPONENT SIDE)

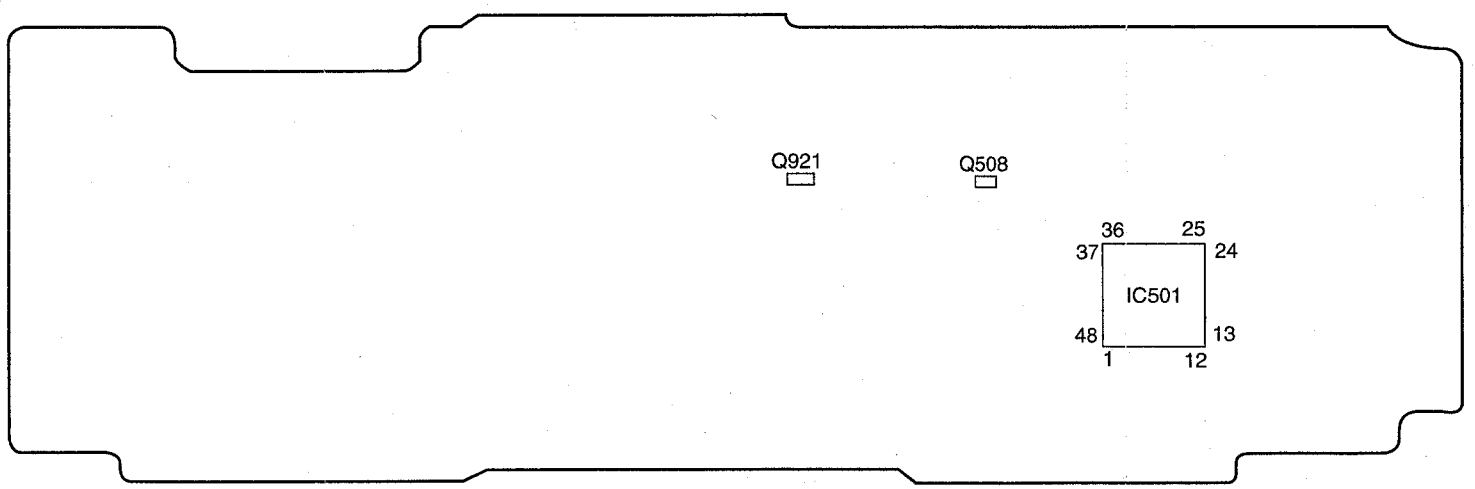

RV-50 BOARD (CONDUCTOR SIDE)

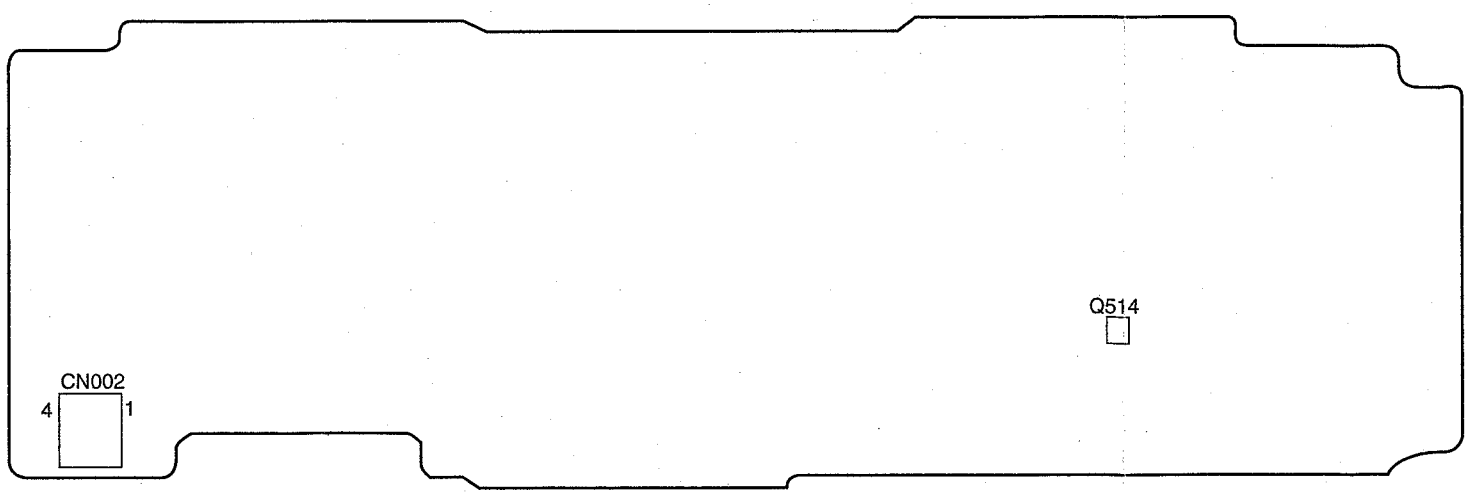

MH-18 BOARD (COMPONENT SIDE)

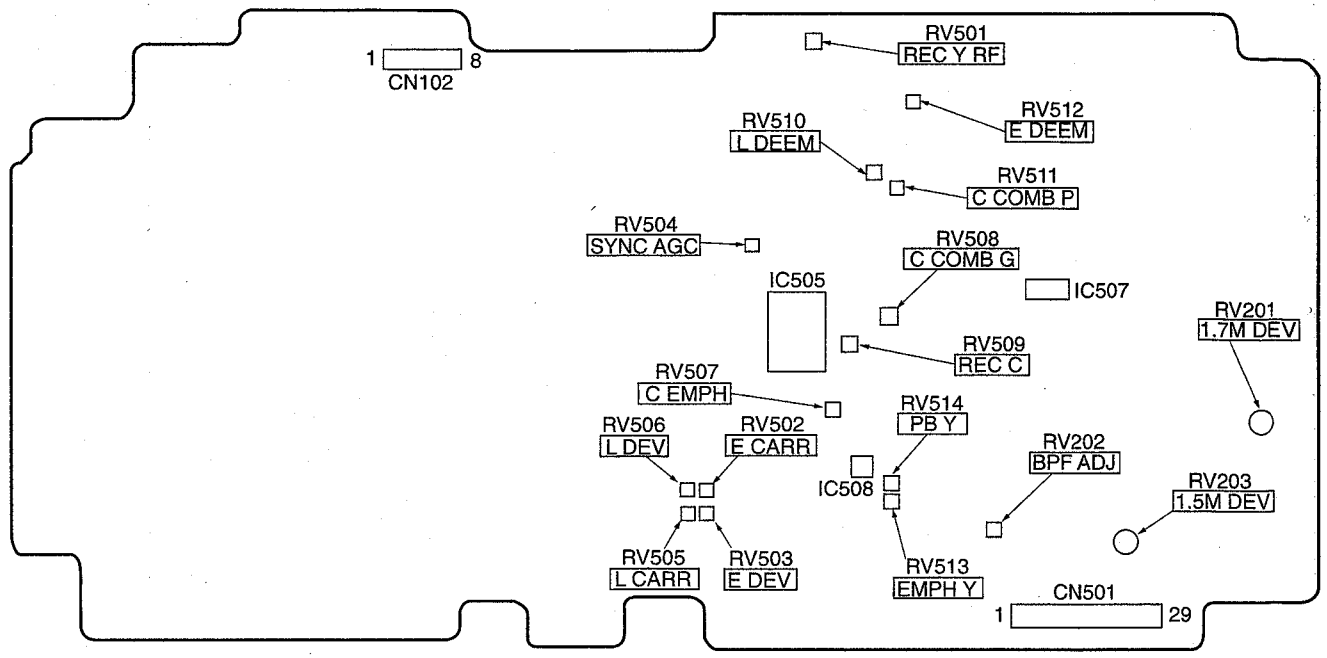

IV-34 BOARD (COMPONENT SIDE)

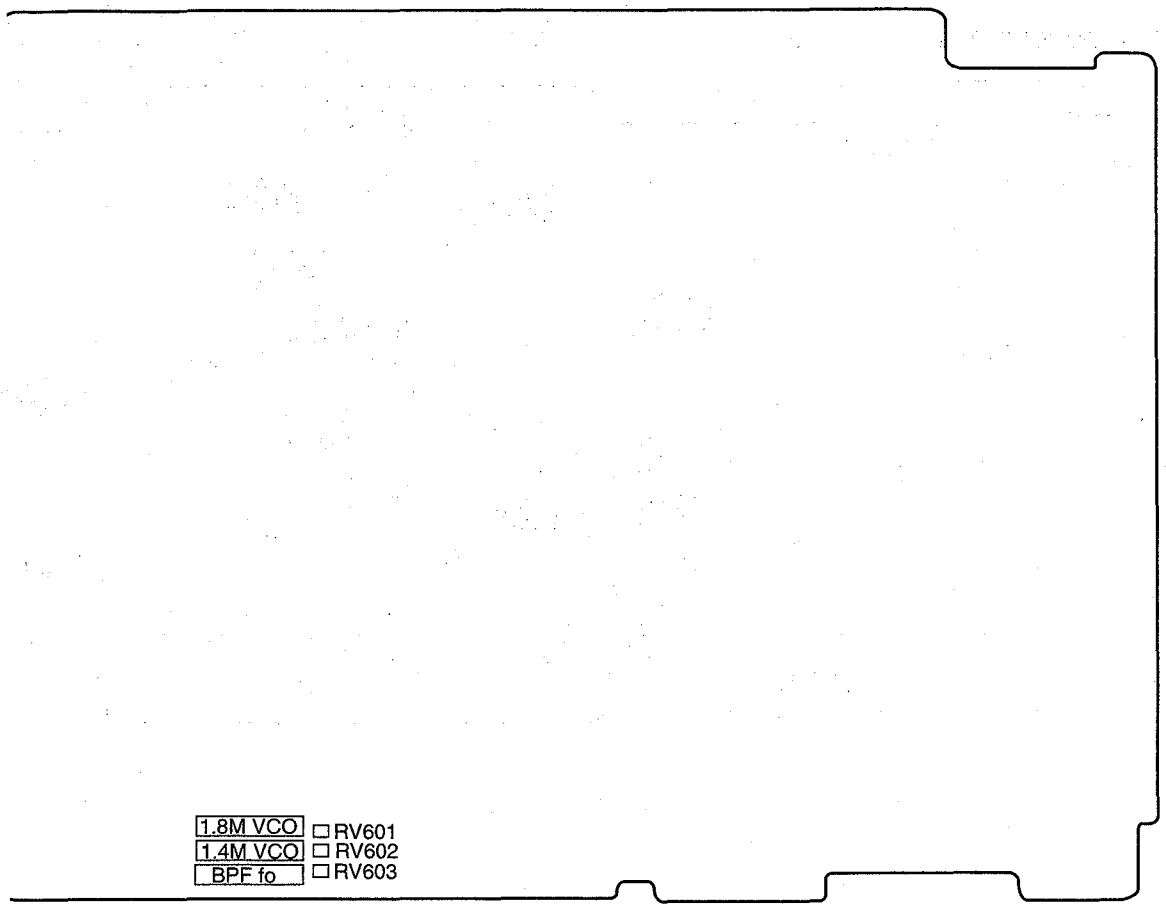

IV-34 BOARD (CONDUCTOR SIDE)

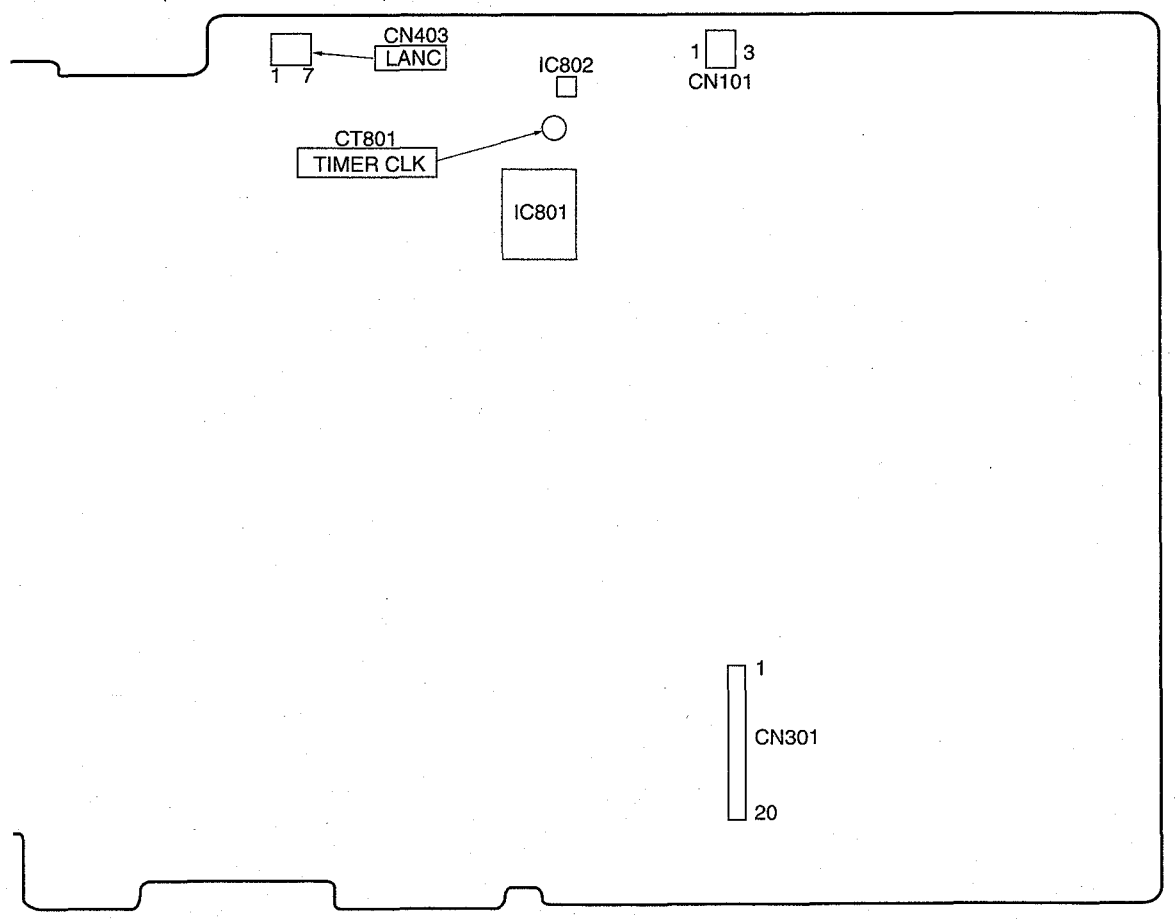

VHS MECHANICAL ADJUSTMENT MANUAL IV

V03056

H MECHANISM

Please use with the service manual.

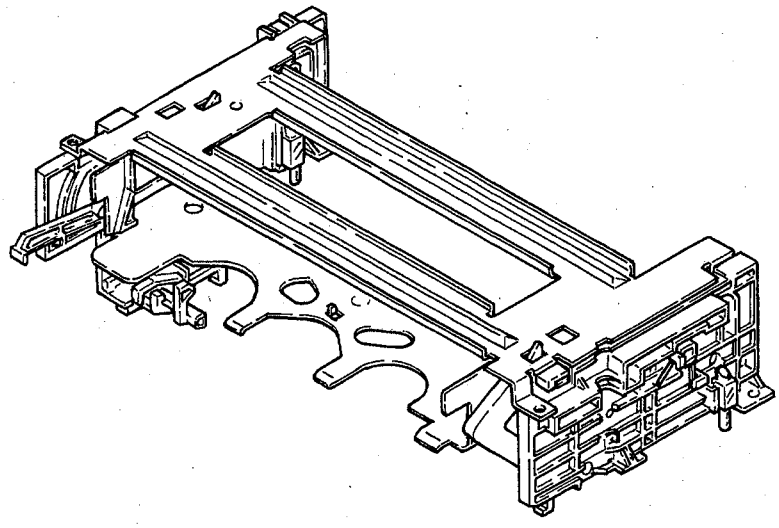

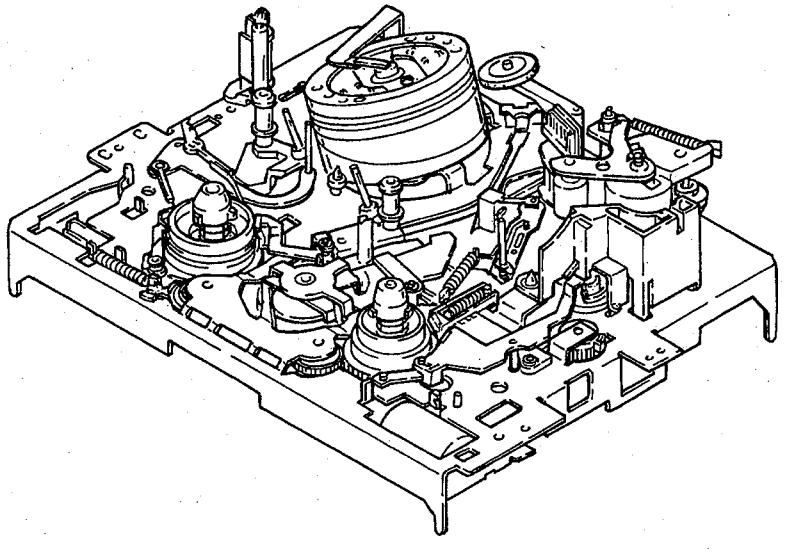

MICROFILM

VHS VIDEO CASSETTE RECORDER

SONY®

TABLE OF CONTENTS

Section	Title	Page
1.	PREPARATION FOR MECHANISM CHECK ADJUSTMENT AND REPLACEMENT	
1-1.	Loading and Threading Procedure When the Power Turns Off (Fig. 1-1)	3
1-1-1.	Loading and Threading Procedure With Hands	3
1-1-2.	Loading and Threading Procedure With Regulated DC Power Supply	3
1-2.	Unloading and Unthreading Procedure When the Power Turns Off (Figs. 1-2 and 1-3)	4
1-2-1.	Unloading and Unthreading Procedure With Hands	4
1-2-2.	Unloading and Unthreading Procedure With Regulated DC Power Supply	4
1-3.	How to Complete Threading Without Cassette Compartment (Fig. 1-4)	6
2.	PERIODIC CHECK AND REPLACEMENT	
2-1.	Cleaning of Rotating Head Disk Assembly	7
2-2.	Cleaning of the Tape Movement System	7
2-3.	Cleaning the Drive System	7
2-4.	Periodic Check Items	8
2-5.	Tools and Fixtures Required for Servicing	9
3.	MAINLY MECHANICAL PARTS REPLACEMENT	
3-1.	FL Block Assembly (Fig. 3-1)	10
3-2.	Drum Assembly (Fig. 3-2)	11
3-3.	Timing Belt (Fig. 3-3)	12
3-4.	Cap Brake Assembly (Fig. 3-4)	13
3-5.	TG2 Roller, FE Head Assembly (Fig. 3-5)	14
3-6.	Pinch Press Block Assembly, Elevator Gear (Fig. 3-6)	15
3-7.	Ace Block Assembly (Fig. 3-7)	16
3-8.	TG3, TG6 Guide Roller Assemblies (Fig. 3-8)	17
3-9.	Capstan Motor (Fig. 3-11)	19
3-10.	Main Brake Assemblies S and T (Fig. 3-12)	20
3-11.	Soft Brake T Assembly (Fig. 3-13)	21
3-12.	RVS Brake Arm Assembly, Reel Table (T) Assembly (Fig. 3-14)	22
3-13.	TG8 Assembly (Fig. 3-15)	23
3-14.	TG8 Holder (Fig. 3-16)	24
3-15.	TG8 and Press Gears (Fig. 3-17)	25
3-16.	Cam Motor Chassis Block Assembly, Upper/Lower Communication Gear (Fig. 3-18)	26
3-17.	Rotary Encoder Switch (Fig. 3-19)	27
3-18.	Main Slider (Fig. 3-20)	28
3-19.	Shuttle T Block and Loading Gear T Block Assemblies (Fig. 3-21)	29
3-20.	Shuttle S Block and Loading Gear S Block Assemblies (Fig. 3-22)	30
3-21.	Reel Table (S) Assembly (Fig. 3-23)	31
3-22.	TG1 Assembly (Fig. 3-24)	32
3-23.	S Winding Block Assembly (Fig. 3-25)	33
3-24.	Trigger Lever and RKB Block Assemblies (Fig. 3-26)	34
4.	ADJUSTMENT	
4-1.	Tape Path Adjustment	35
4-1-1.	Tension Regulator (TG1) Position/ Tension Adjustment (Fig. 4-1)	35
4-1-2.	TG8 Guide Roller Height Adjustment (Fig. 4-2)	36
4-1-3.	Height Adjustment of Guide Rollers No. 3 and No. 6 (Fig. 4-3)	36
4-1-4.	Ace Head Assembly Adjustment (Rough Adjustment) (Figs. 4-4 and 4-5)	37
4-1-5.	Ace Head Assembly Adjustment (Precision Adjustment)	38
4-1-6.	X-Value Adjustment	38
4-1-7.	Adjustments After Replacing the Drum (Video Head)	40
4-1-8.	Checking the Tension and Torque	42

1. PREPARATION FOR MECHANISM CHECK ADJUSTMENT AND REPLACEMENT

Refer to the service manual, "DISASSEMBLY" for removal of the cabinet and boards.

1-1. LOADING AND THREADING PROCEDURE WHEN THE POWER TURNS OFF (Fig. 1-1)

1-1-1. LOADING AND THREADING PROCEDURE WITH HANDS

1) Turn cam motor in the arrow Ⓐ direction until loading and threading are end.

1-1-2. LOADING AND THREADING PROCEDURE WITH REGULATED DC POWER SUPPLY

1) Applying approx. +9 V (300 mA) to cam motor with regulated DC power supply makes it loading and threading.

Note: When loading and threading without cassette, claws are caught in four positions as following figure (in the order ① → ② → ③ → ④).
So release them with hands.

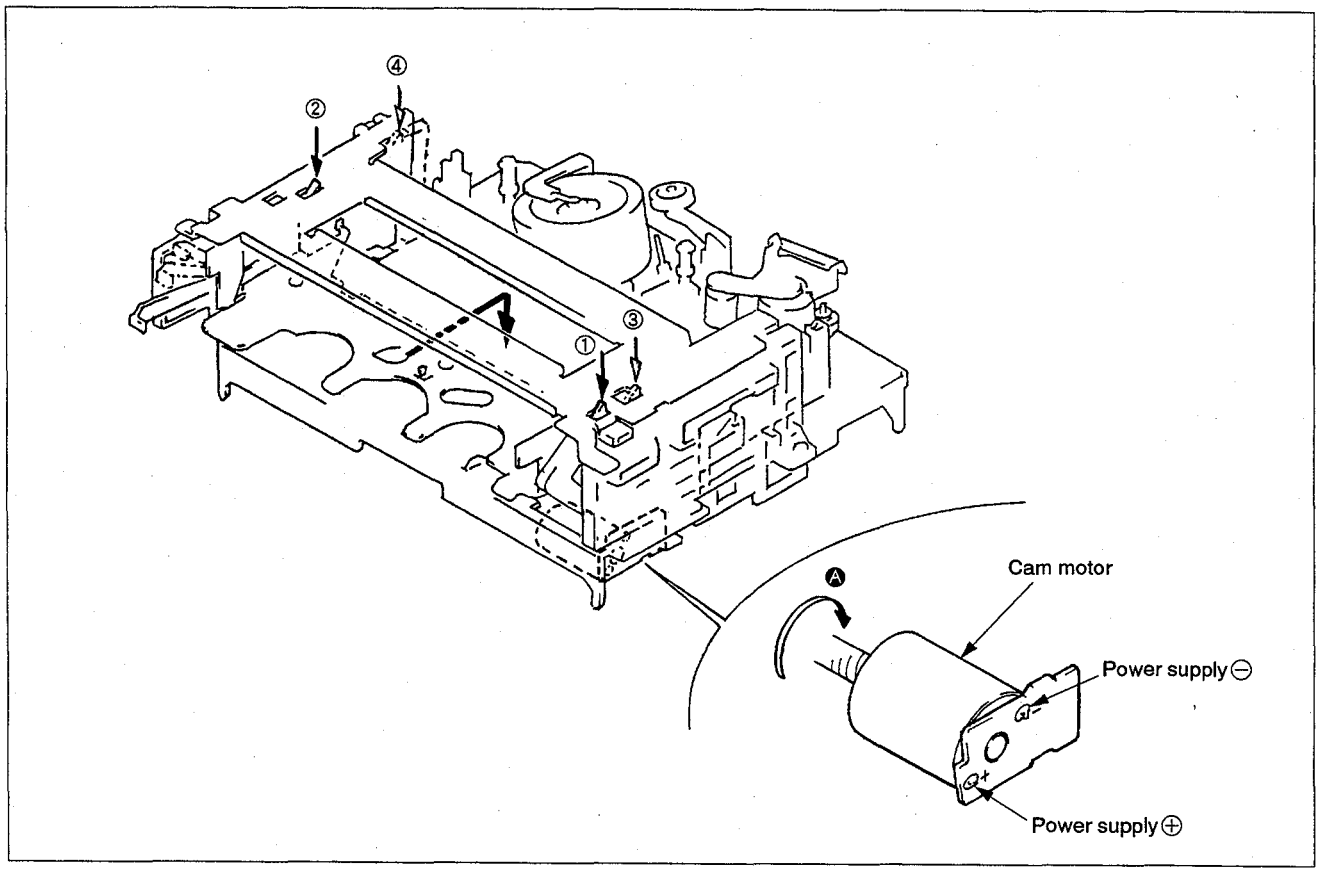

Fig. 1-1

1-2. UNLOADING AND UNTHREADING PROCEDURE WHEN THE POWER TURNS OFF (Figs. 1-2 and 1-3)

1-2-1. UNLOADING AND UNTHREADING PROCEDURE WITH HANDS

1) Turn cam motor in the arrow Ⓑ direction until unthreading is end.
2) Turn capstan motor in the arrow Ⓒ direction to take up tape in cassette.
3) Turn cam motor in the arrow Ⓑ direction until unloading is end.

1-2-2. UNLOADING AND UNTHREADING PROCEDURE WITH REGULATED DC POWER SUPPLY

1) Apply approx. +9 V (300 mA) to contrary polarities of cam motor.
2) Unthreading operation begins, tape guides return to their original positions (Unthreading operation is end but tape remains), then stop cam motor by turning power off.

Note: When unloading begins and cassette lid is closed, turn cam motor in the arrow Ⓐ direction to open tape guard.

3) Turn capstan motor in the arrow Ⓒ direction to take up tape in cassette.

Note: That tape is not caught at pinch roller. (Fig. 1-3)

4) Check that tape is not loosened completely, and apply approx. +9 V (300 mA) to contrary polarities of cam motor with regulated DC power supply. (Fig. 1-2)

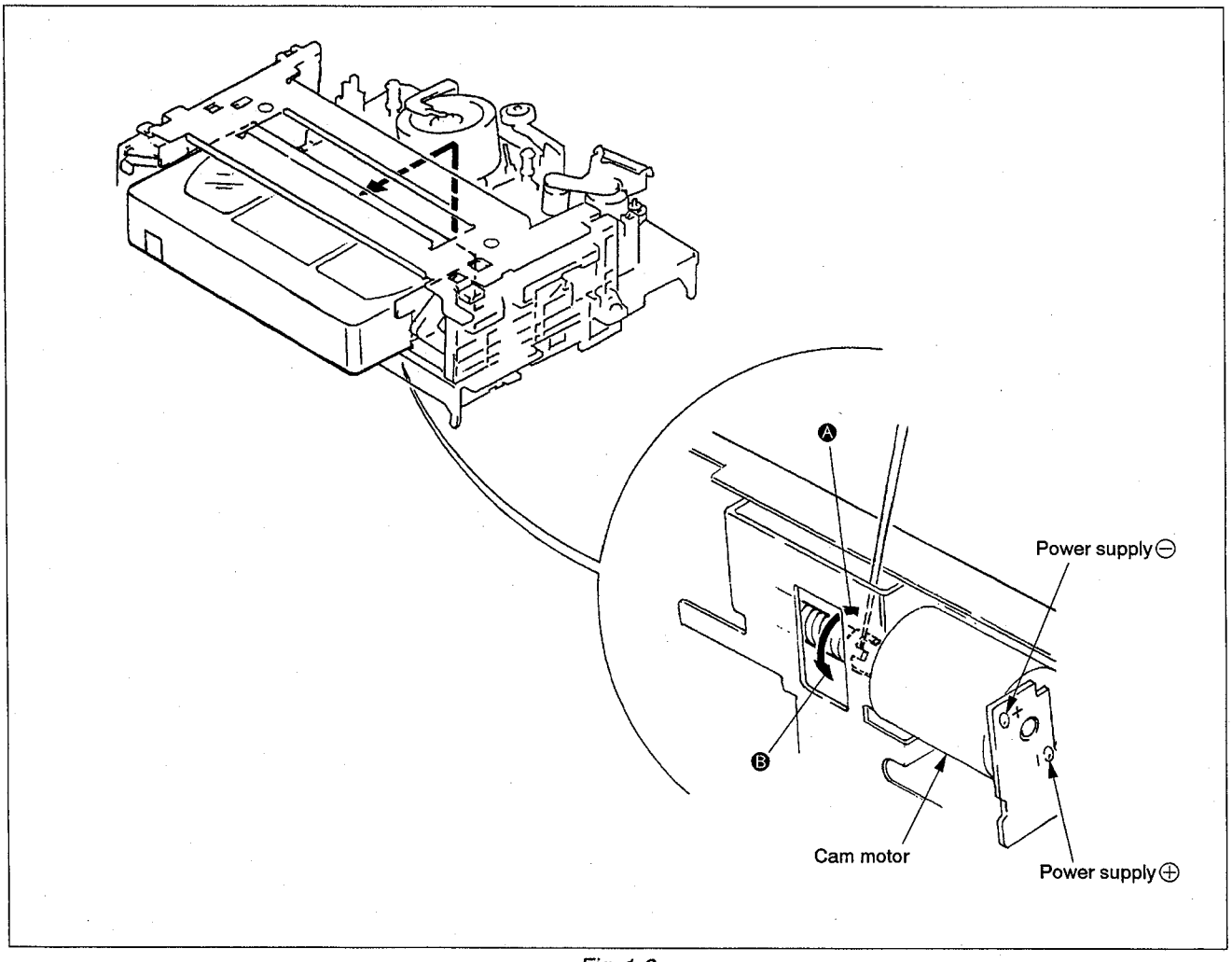

Fig. 1-2

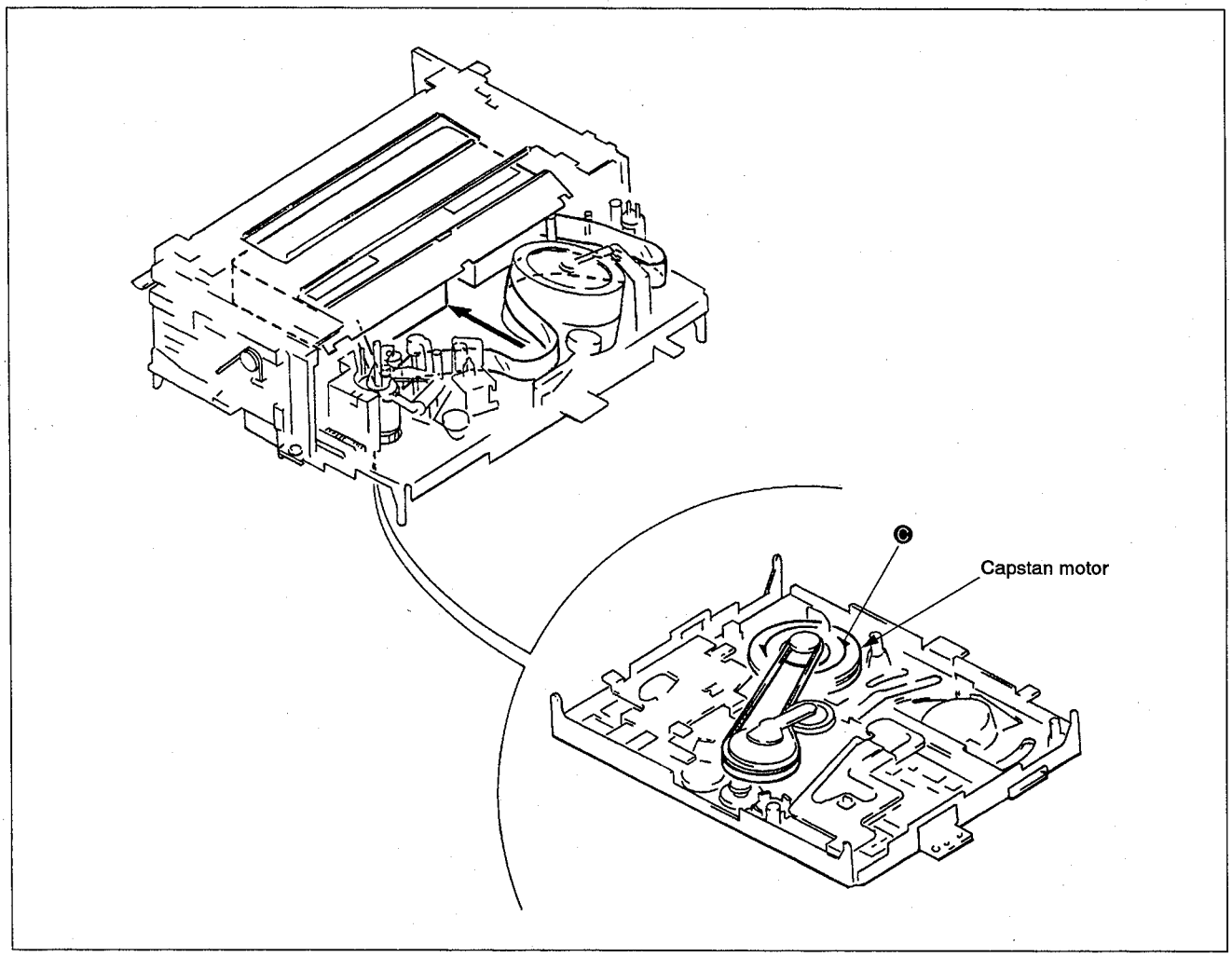

Fig. 1-3

1-3. HOW TO COMPLETE THREADING WITHOUT CASSETTE COMPARTMENT (Fig. 1-4)

Note 1: Put the FL block assembly removed the FL top plate on the bottom not to put dust or grease the top sensor and the end sensor luminous plates or not to scratch them. (Fig. A)

1) Pull out AC plug from wall outlet.
2) Shade near the end and top sensors with a black masking tape on the like.
3) Press cassette in/rec proof switch with a tip of screwdriver or the like.
4) Connect AC plug to wall outlet.
5) Release cassette in/rec proof switch by putting off a tip of screwdriver or the like.
   (At this time, power turns on, rewind operates for 10 seconds, after that power turns off.)

Note 2: In this condition, each mode can be set to video cassette recorder. (including recording mode)
However, fast forward should be done after rewinding for 15 seconds or more.

Note 3: After above mentioned operation, be sure to return the mode in the following order.

1) Remove the tape near the end and top sensors.
2) Pull out AC plug from wall outlet to reset the system control microcomputer.

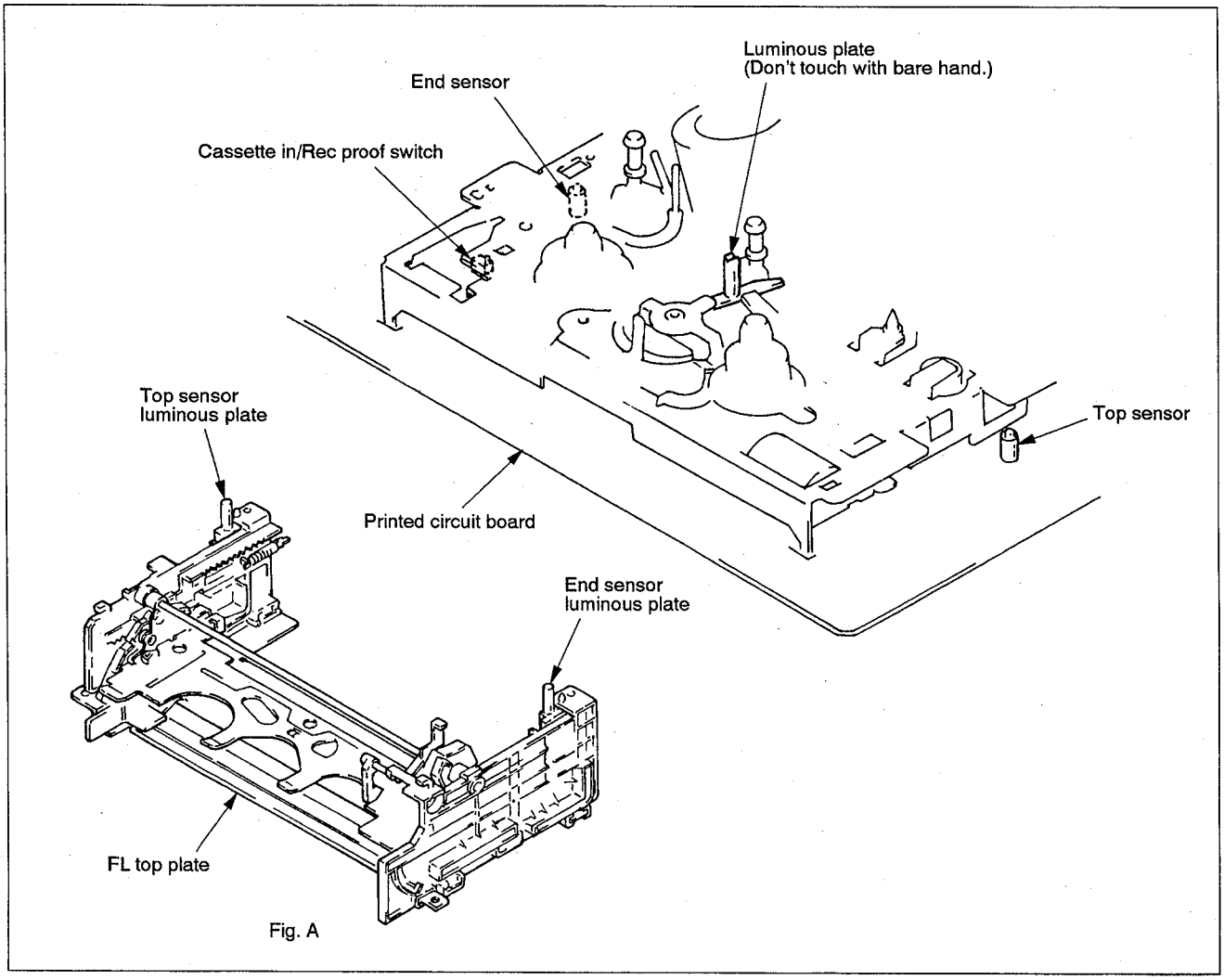

Fig. 1-4

2. PERIODIC CHECK AND REPLACEMENT

In order to obtain the best performance from this unit and make full use of its capabilities, and to extend the life of the unit and tapes, it is recommended that the following periodic checks and maintenance be performed.

* The following must be done after every repair regardless of how many hours the user has operated the machine.

2-1. CLEANING OF ROTATING HEAD DISK ASSEMBLY

1) Press a chamois cloth (Jig Ref. No. J-9) which has been dipped in cleaning fluid (Jig Ref. No. J-8) lightly against the rotating drum assembly, then do the cleaning by slowly rotating the rotating head disk by hand. (Never try to clean by using the motor to turn it.)
2) Never try to clean by moving the chamois cloth at a vertical angle to the head tip. There is a very great danger of damaging the head tip if this is done.

2-2. CLEANING OF THE TAPE MOVEMENT SYSTEM

1) Clean the surfaces which the tape contacts during its movement (tape guide, drum assembly surface, capstan, pinch roller, etc.) with a chamois cloth that has been dipped in cleaning fluid.

2-3. CLEANING THE DRIVE SYSTEM

1) Clean the driving parts with a cloth that been dipped in cleaning fluid.

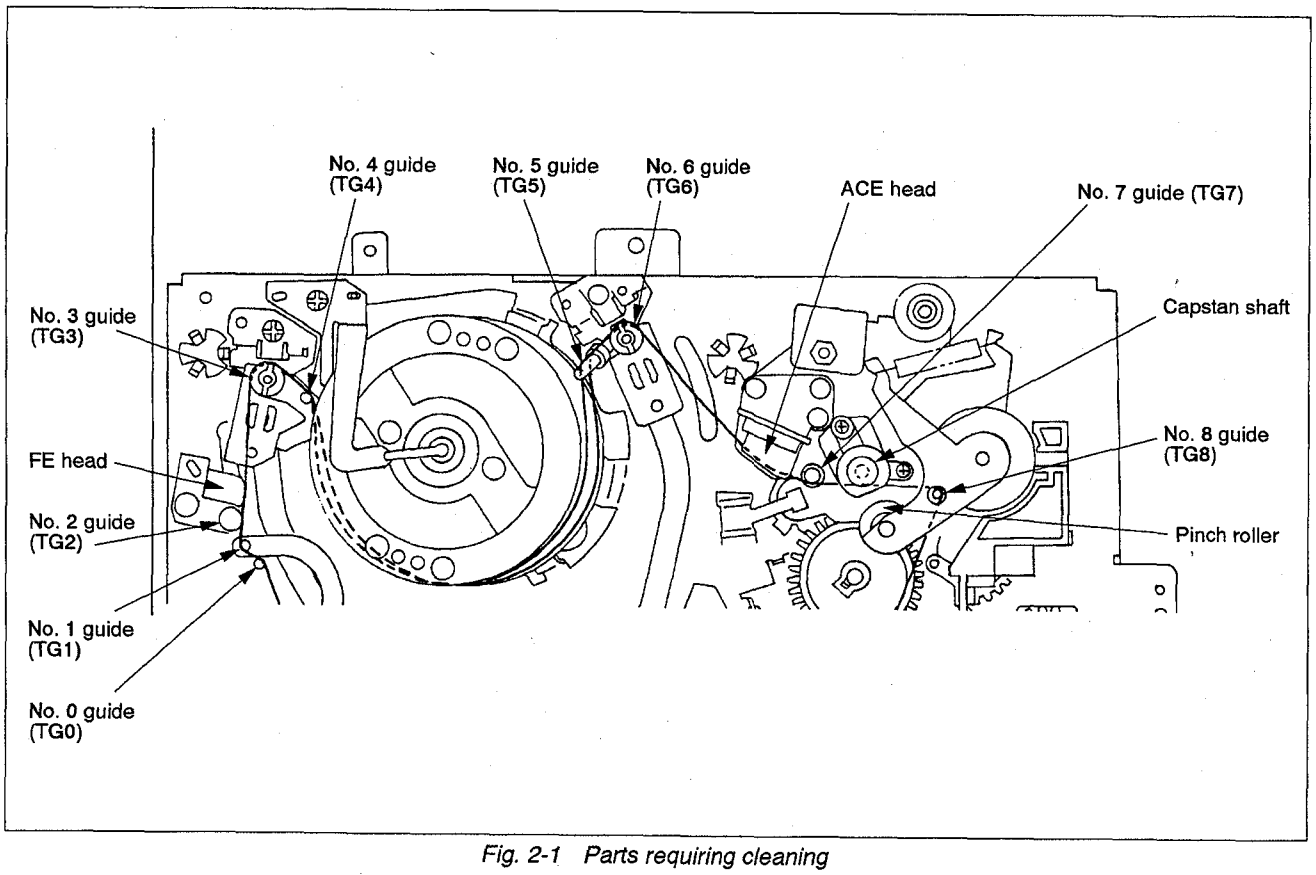

Fig. 2-1 Parts requiring cleaning

2-4. PERIODIC CHECK ITEMS

Perform the maintenance and check listed on the table below, according to users operating hours.

Maintenance & Check \ Operating Hours (H)		500	1,000	1,500	2,000	2,500	3,000	3,500	4,000	4,500	5,000	Remarks
Tape Transportation System	Cleaning of tape transportation system	○	○	○	○	○	○	○	○	○	○	This cleaning must be done whenever a repair is made.
	Cleaning and degaussing of ACE assembly	○	○	○	○	○	○	○	○	○	○	
	Cleaning & degaussing of upper drum assembly	○	○	○	○	○	○	○	○	○	○	The life of the head varies, depending on operational conditions and method.
Performance Confirmation	Abnormal sound	☆	☆	☆	☆	☆	☆	☆	☆	☆	☆	Adjust or replace the section which causes abnormal sound.
	Measurement of FWD back tension	–	☆	–	☆	–	☆	–	☆	–	☆	Confirmation must be made according to 4-1-1. Specified value: adjust to 36 to 44 g•cm (when measured with torque cassette tape)
	Confirmation of brake system	–	☆	–	☆	–	☆	–	☆	–	☆	Confirmation must be made according to section.
	Confirmation of record & playback functions	☆	☆	☆	☆	☆	☆	☆	☆	☆	☆	Perform the confirmation whenever repair is made.
	Measurement of forward torque	☆	☆	☆	☆	☆	☆	☆	☆	☆	☆	Adjust to 70 to 120 g•cm

○ Cleaning ☆ Confirmation

Note: On overhaul
When overhauling the unit, replace parts as indicated in the above table.

2-5. TOOLS AND FIXTURES REQUIRED FOR SERVICING

Ref No.	Name	Part No.	Carved Jig No.	Remarks
J-1	Master Plane	H-7099-279-H		Applicable to S-VHS
J-2	Reel Disk Height Jig	H-7099-038-H		
J-3	Torque Gauge Adaptor	H-7099-035-H		
J-4	0.93 mm Torque Gauge	H-7099-039-H		
J-5	Hex. Wrench	H-7099-202-H		
J-6	Torque Measurement Cassette VHT-063S	J-6082-011-A		For FWD & back tension torque measurement.
	Torque Measurement Cassette VHT-404S	J-6082-012-A		For CUE and review torque measurement.
J-7	Alignment Tape JVC-MH-1 (NTSC) 24HASF-2 (NTSC Hi-Fi) JVC-MH-2 (PAL) JVC-MH-4 (SECAM)	 H-7099-046-H H-7099-153-H H-7099-052-H H-7099-053-H		
J-8	Cleaning Fluid	Y-2031-001-0	———	
J-9	Chamois Leather	2-034-697-00	———	
J-10	Head Demagnetizer	Widely available	———	Demagnetize video heads and audio heads.
J-11	Dental Mirror (With handle) Dental Mirror (Mirror)	J-6080-029-A J-6080-030-1	SL-5052	Tape path and tape traveling adjustments or checks.
J-12	FLOIL SG-055G	7-651-000-09		
J-13	Diamond Oil NT-68	7-661-018-18		
J-14	Screw Lock G (1401B)	7-432-114-11		

J-1

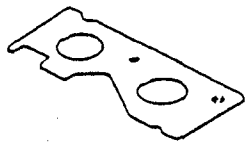

J-2

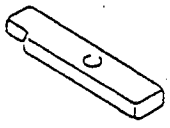

J-3

J-4

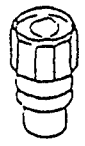

J-5

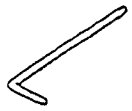

J-6

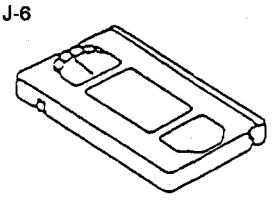

J-7

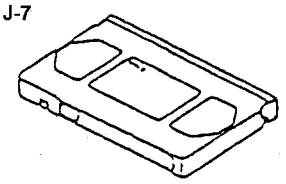

J-8

J-9

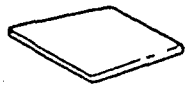

J-10

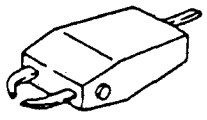

J-11

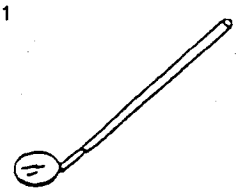

J-12

J-13

J-14

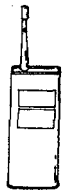

3. MAINLY MECHANICAL PARTS REPLACEMENT

Notes:

- Refer to the service manual, "DISASSEMBLY" for removal of the cabinet and boards.
- On mounting, while referring to notes on mounting perform reversely in the removal order.
- When replacing greased parts, grease them in the same way.
- Do not oil, grease or touch with bare hands the surfaces contacts tape of guides and brake shoes.
- Install gears to engage each other.
- Basically, disassembling and assembling should be done in the unthreading-end condition.

3-1. FL BLOCK ASSEMBLY (Fig. 3-1)

1) Remove screws ①.
2) Remove FL block assembly ② in the arrow Ⓐ direction.

Note: Be careful not to damage claws on the bottom and front.

[Note on Mounting]

- First insert claws on the bottom and front not to damage.
- Engage FL slide plate to FL driving gear with slightly sliding FL slide plate. (Fig. A)
- Keep clean top sensor and end sensor luminous plates. (Refer to 1-3.)

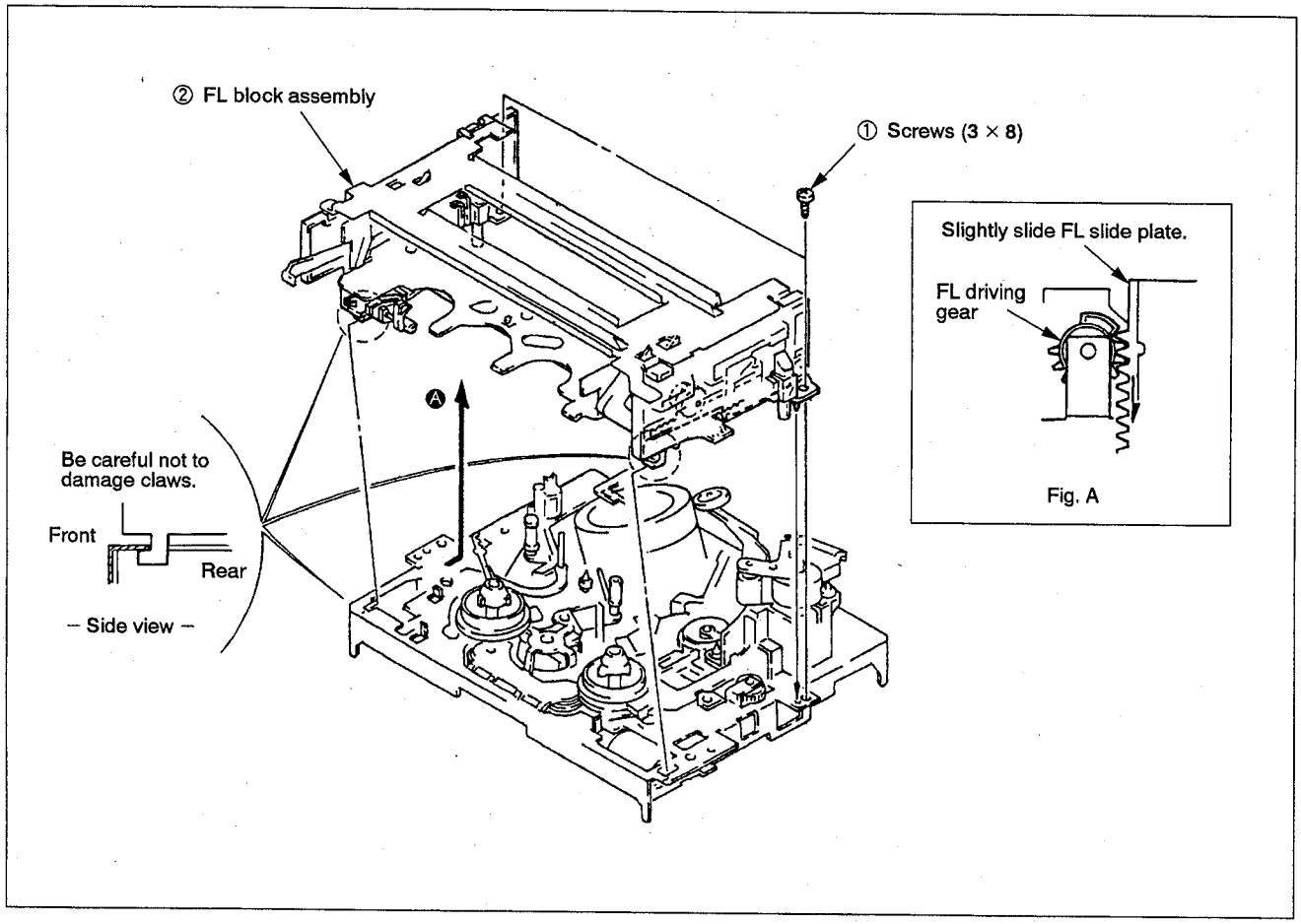

Fig. 3-1

3-2. DRUM ASSEMBLY (Fig. 3-2)

1) Remove screw ①.
2) Remove ground shaft assembly ② not to touch its tip with bare hand or tools.
3) Remove screws ③ to remove drum assembly ④.

[Note on Mounting]

- Don't touch head chips ⑤ and ground shaft assembly ④ with bare hand or tools.
- Keep clean the surface contacts tape of drum assembly ④.

[Adjustment after Mounting]

- 4-1. Tape path adjustment.

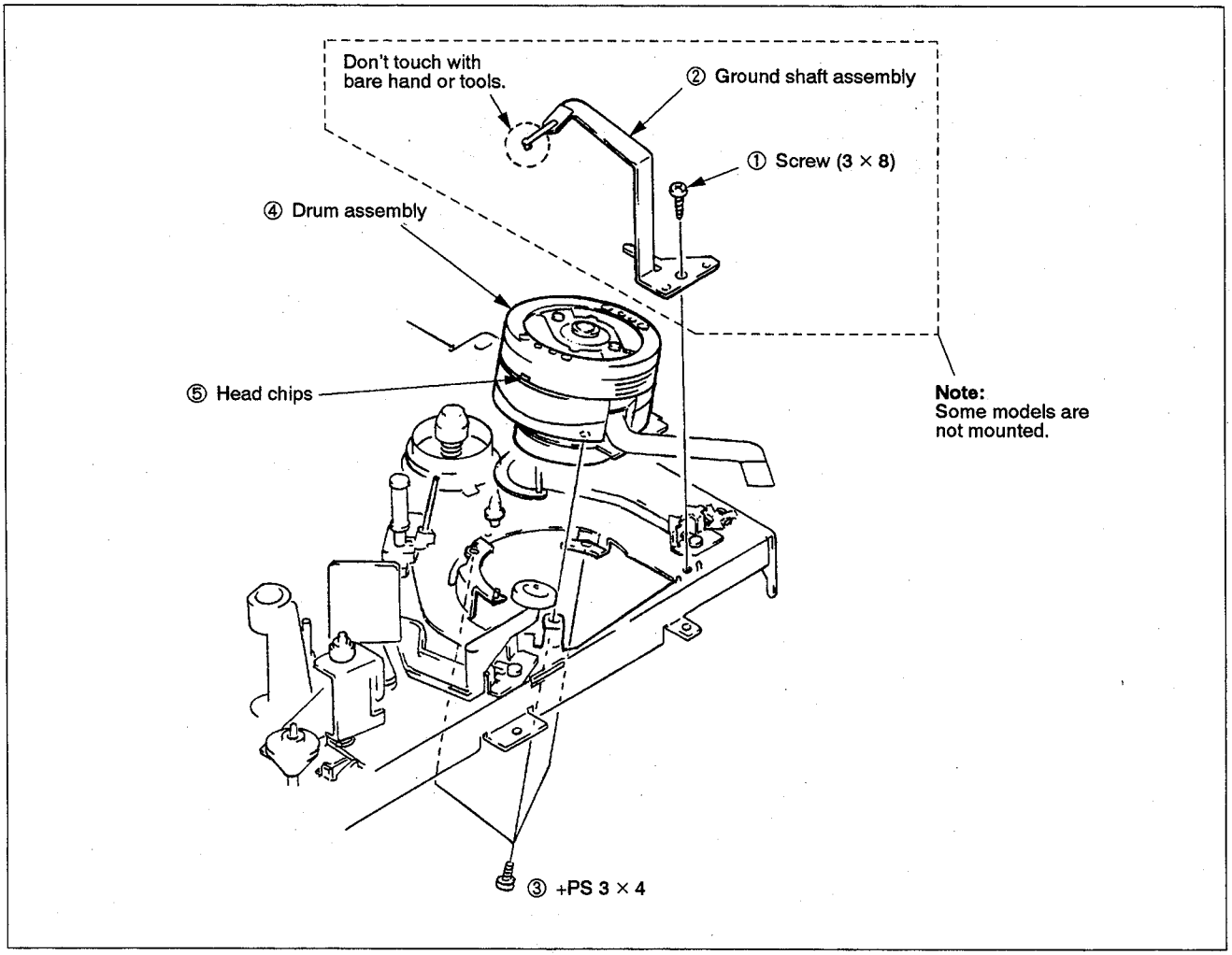

Fig. 3-2

3-3. TIMING BELT (Fig. 3-3)

1) Remove screw ① to remove tension vehicle arm assembly ②.
2) Remove timing belt ③.

[Note on Mounting]

• Tighten screw ① while pressing tension vehicle arm in the arrow Ⓐ direction.

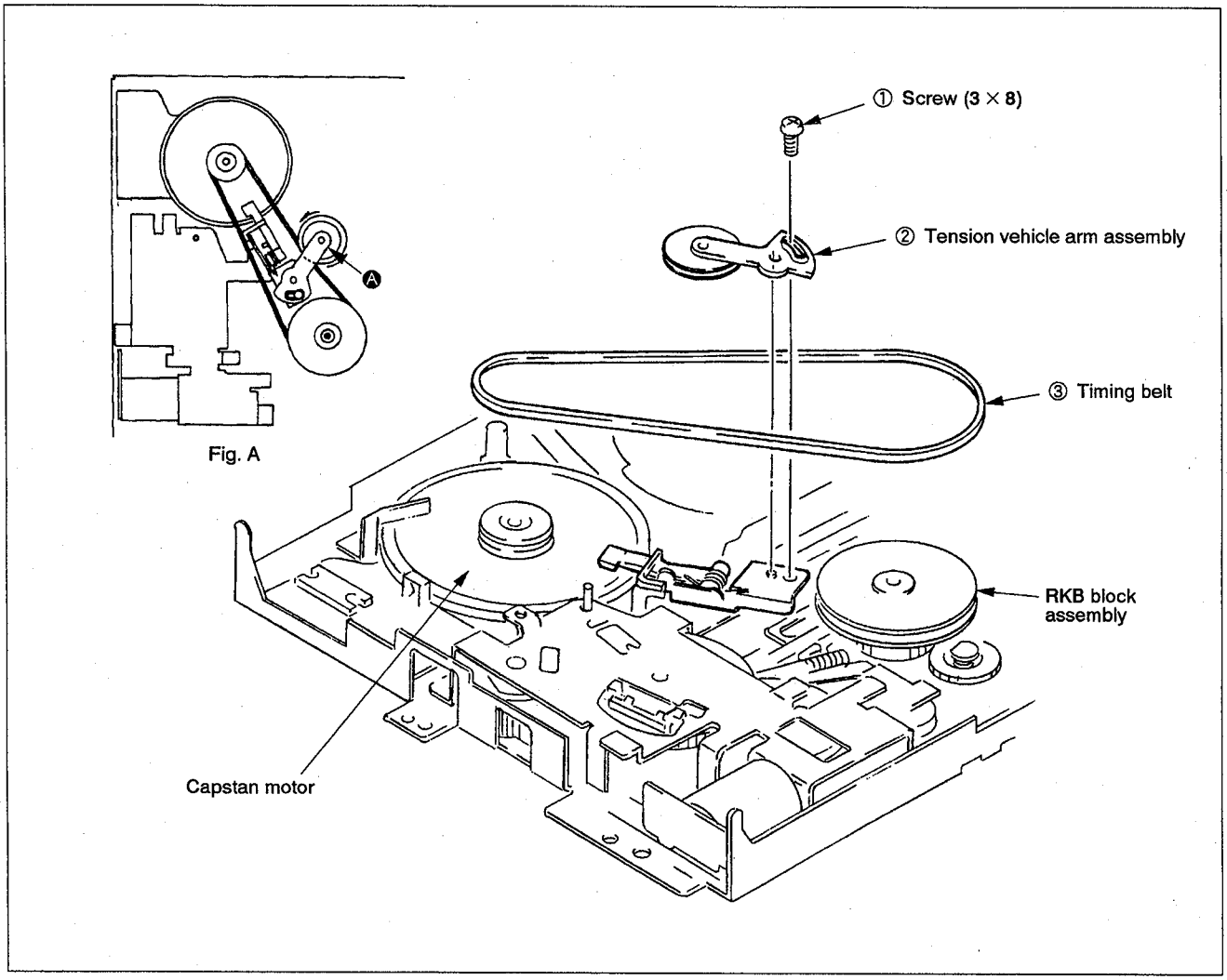

Fig. 3-3

3-4. CAP BRAKE ASSEMBLY (Fig. 3-4)

1) Remove tension vehicle arm assembly. (Refer to 3-3)
2) Remove torsion coil spring ① from portion Ⓐ to remove CAP brake assembly.

[Note on Mounting]

- Mount torsion coil spring ① to CAP brake assembly ② in the order Ⓐ and Ⓑ. (Fig. A)
- Put the fulcrum of CAP brake assembly ② to CAP brake shaft ③ and the tip of torsion coil spring to Ⓒ.
- Don't touch brake shoe Ⓓ with bare hand.

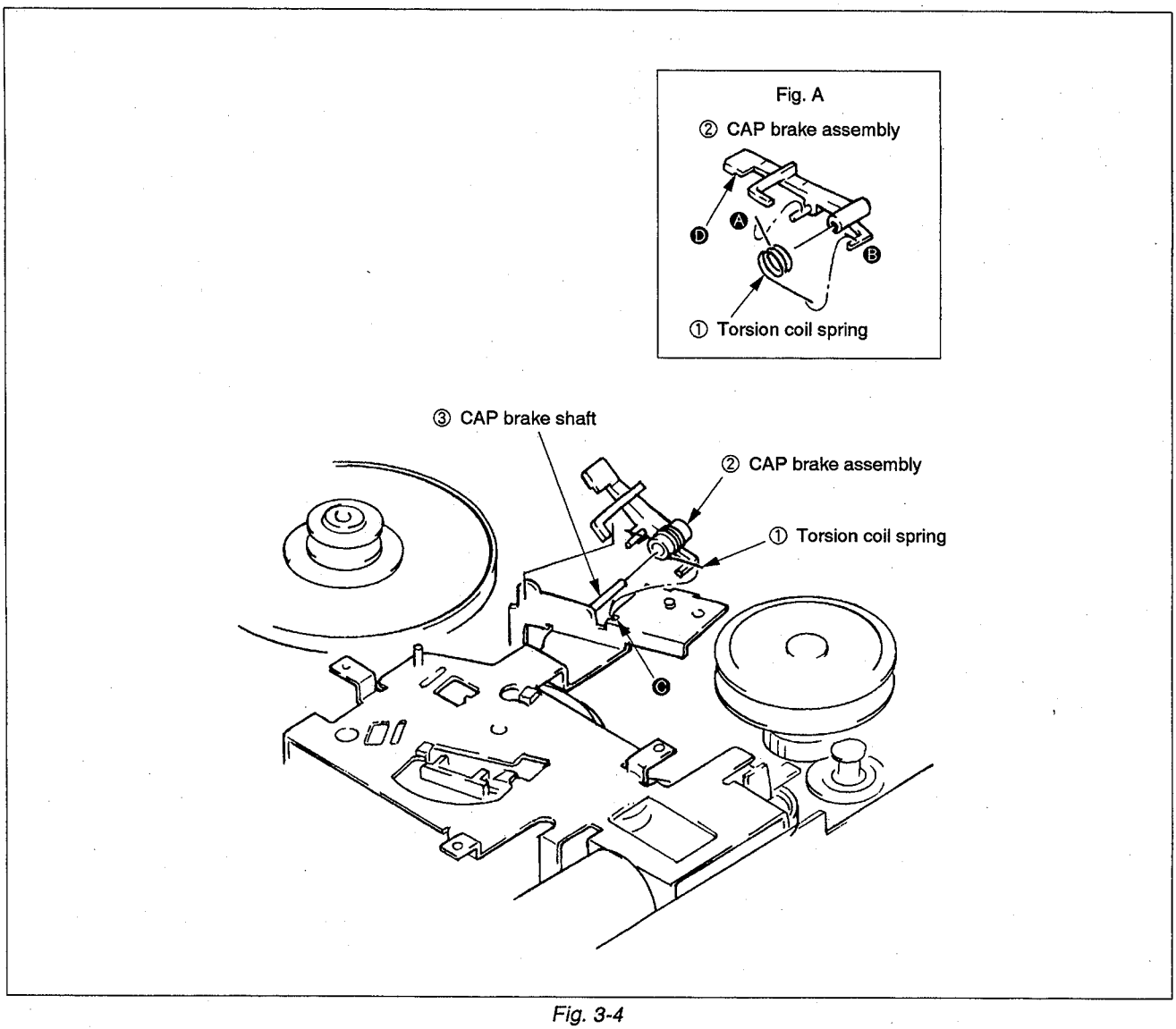

Fig. 3-4

3-5. TG2 ROLLER, FE HEAD ASSEMBLY (Fig. 3-5)

1) Remove claw Ⓐ to pull out TG2 roller ①.
2) Remove screw ② to pull out FE head assembly.

[Note on Mounting]

- Keep clean the surface contacts tape of TG2 roller ①.

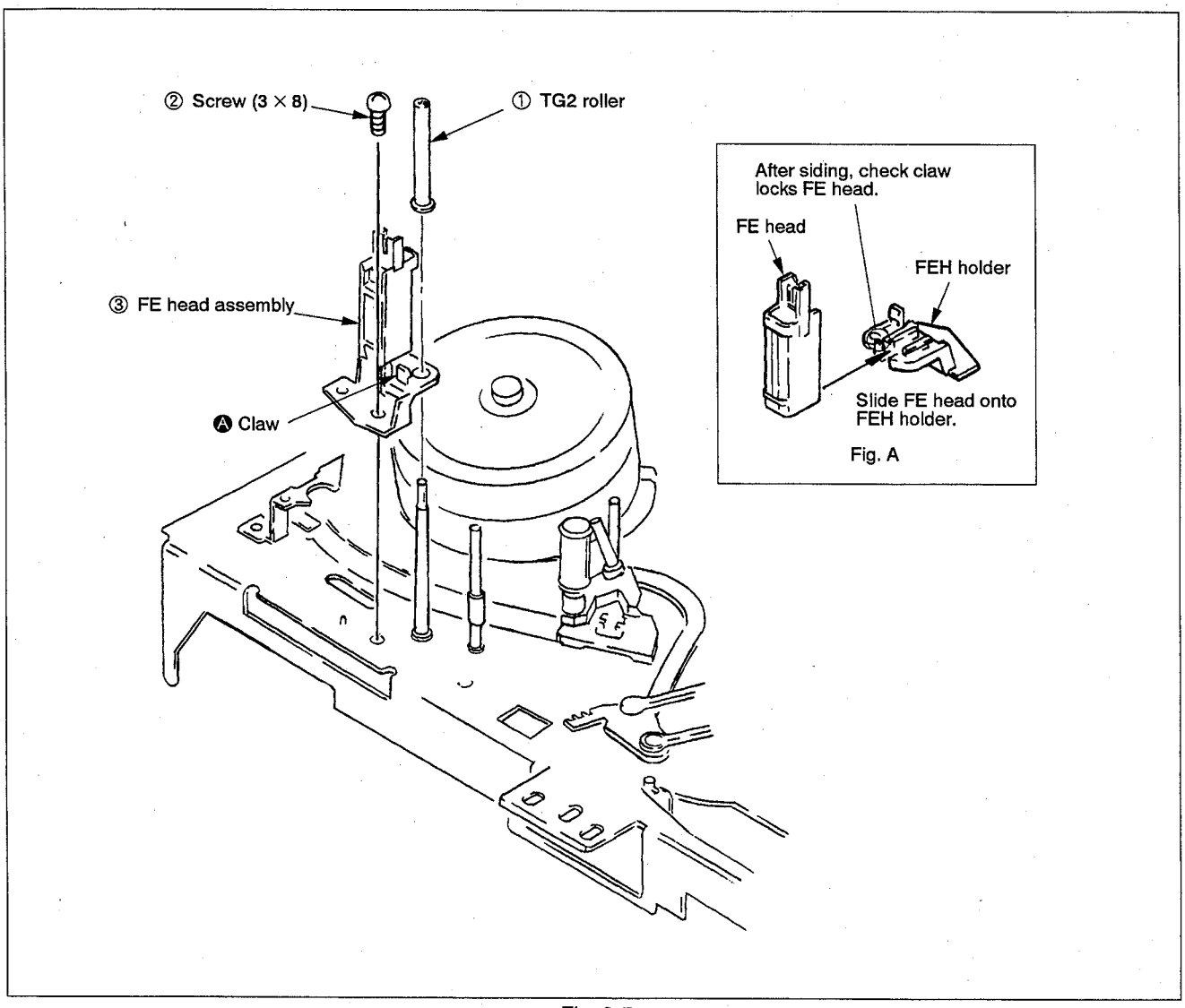

Fig. 3-5

3-6. PINCH PRESS BLOCK ASSEMBLY, ELEVATOR GEAR (Fig. 3-6)

1) Remove E ring ① to pull out pinch press block assembly ②.
2) Remove lid opener ③ by pressing claw Ⓐ in the arrow Ⓑ direction.
3) Pull out elevator gear ④.

[Note on Mounting]

- Apply grease FLOIL SG-055G (Jig Ref. No. J-12) to ☆ marked portions.
- Be sure to match the phase Ⓒ between elevator gear ④ and press gear ⑤ on mounting elevator gear ④.

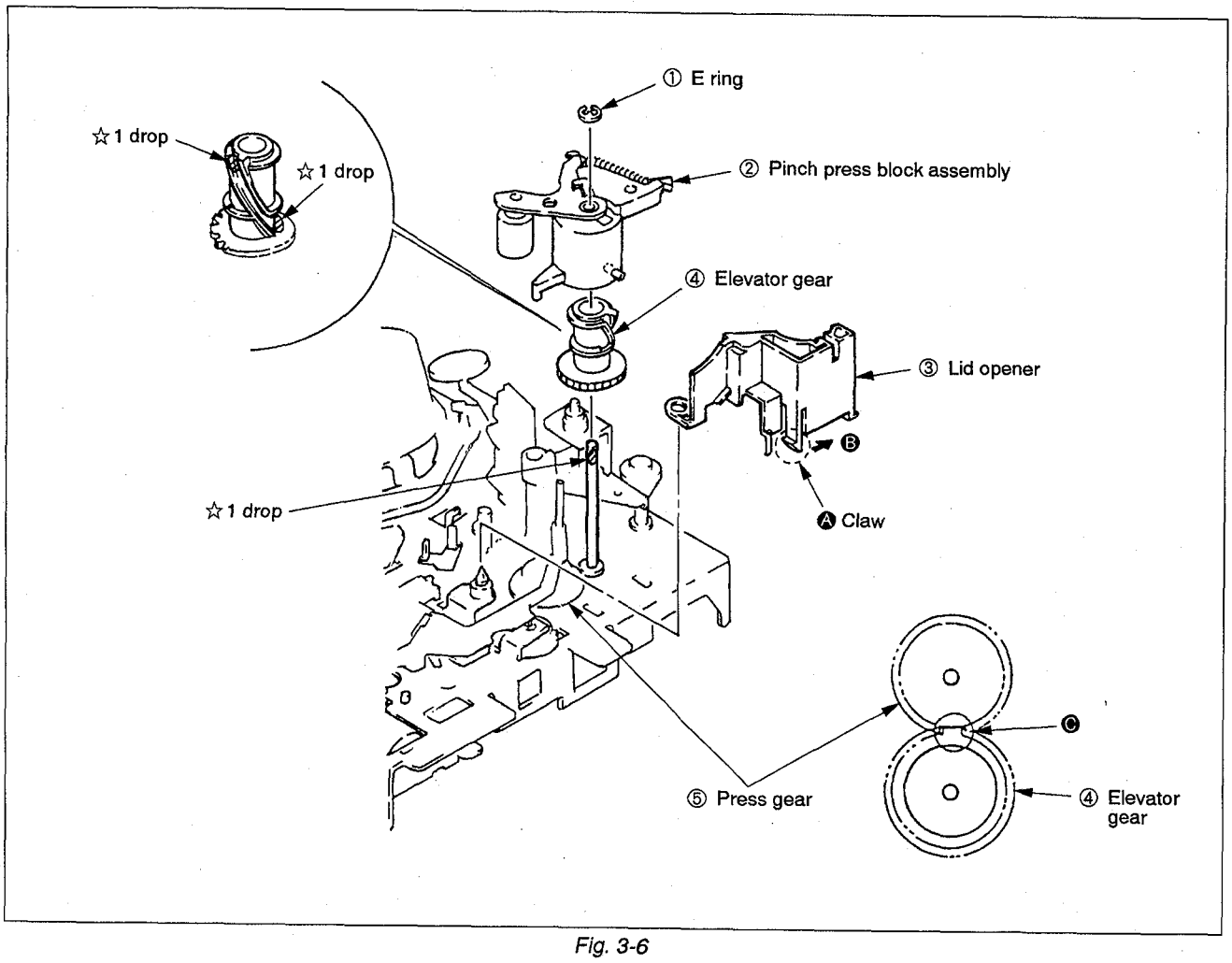

Fig. 3-6

3-7. ACE BLOCK ASSEMBLY (Fig. 3-7)

1) Move torsion coil spring (ACE) ① in the arrow Ⓐ direction.
2) Remove ACE adjustment screw ②.
3) Remove AC height adjustment nut ③ to pull out ACE block assembly ④.

[Note on Mounting]

- Keep clean the surface contacts tape of ACE block assembly ④.
- Be sure to hang torsion coil spring (ACE) ① in the arrow Ⓑ direction.
- Set ACE adjustment screw ② to the height as shown in Fig. A.

[Adjustment after Mounting]

- 4-1. Tape path adjustment.
- After adjustment apply Screw Lock G (1401B) (Jig Ref. No. J-14) at ☆ marked portion.

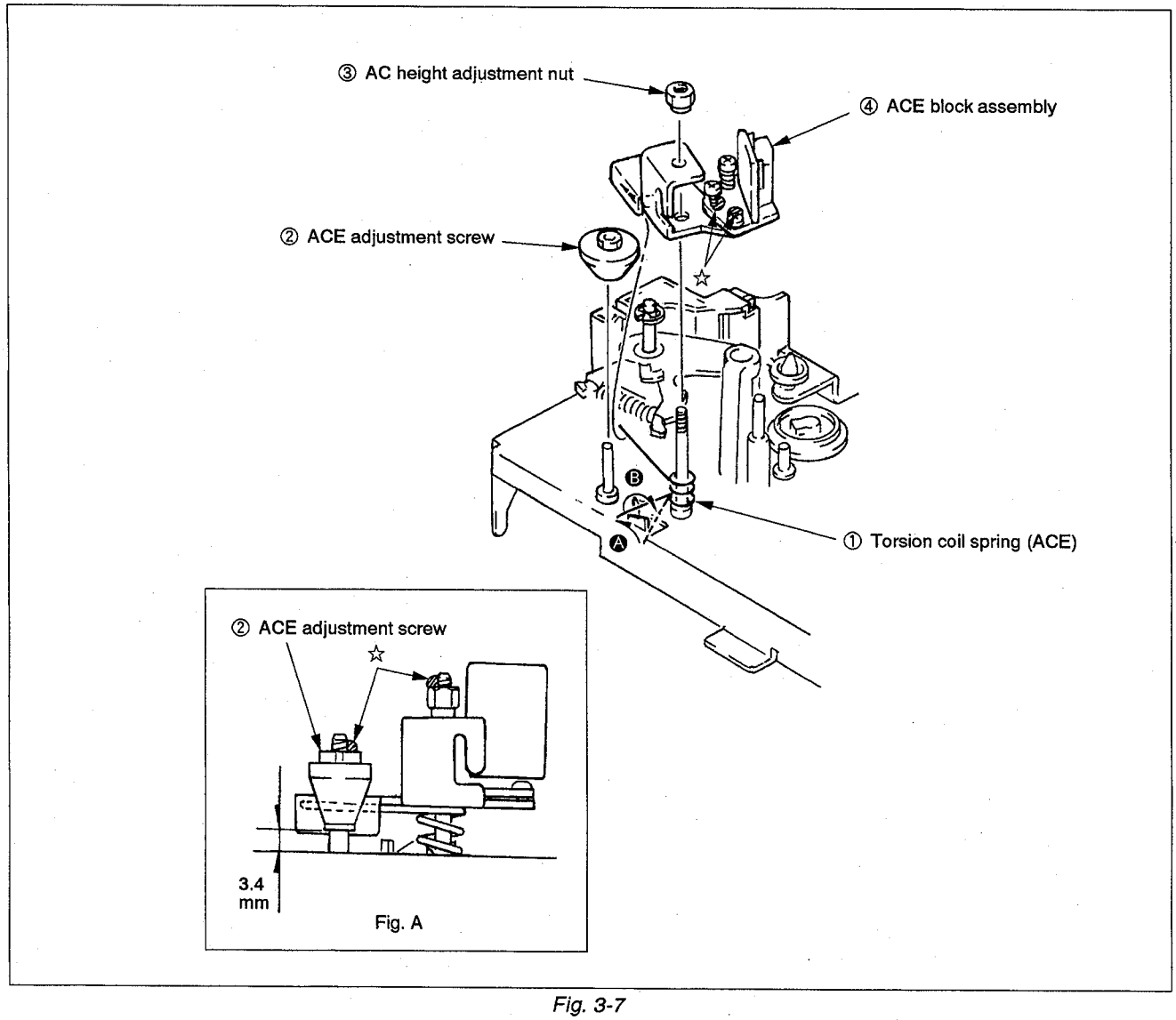

Fig. 3-7

3-8. TG3, TG6 GUIDE ROLLER ASSEMBLIES (Fig. 3-8)

1) Loosen screw ① and pull out. TG3 guide roller assembly ② by turning it in the arrow Ⓐ direction.
2) Loosen screw ③ and pull out TG6 guide roller assembly ④ by turning it in the arrow Ⓑ direction.

[Note on Mounting]

- Keep clean the surface contacts tape of TG3 and TG6 guide roller assemblies ②, ④.

[Adjustment after Mounting]

- 4-1. Tape path adjustment.

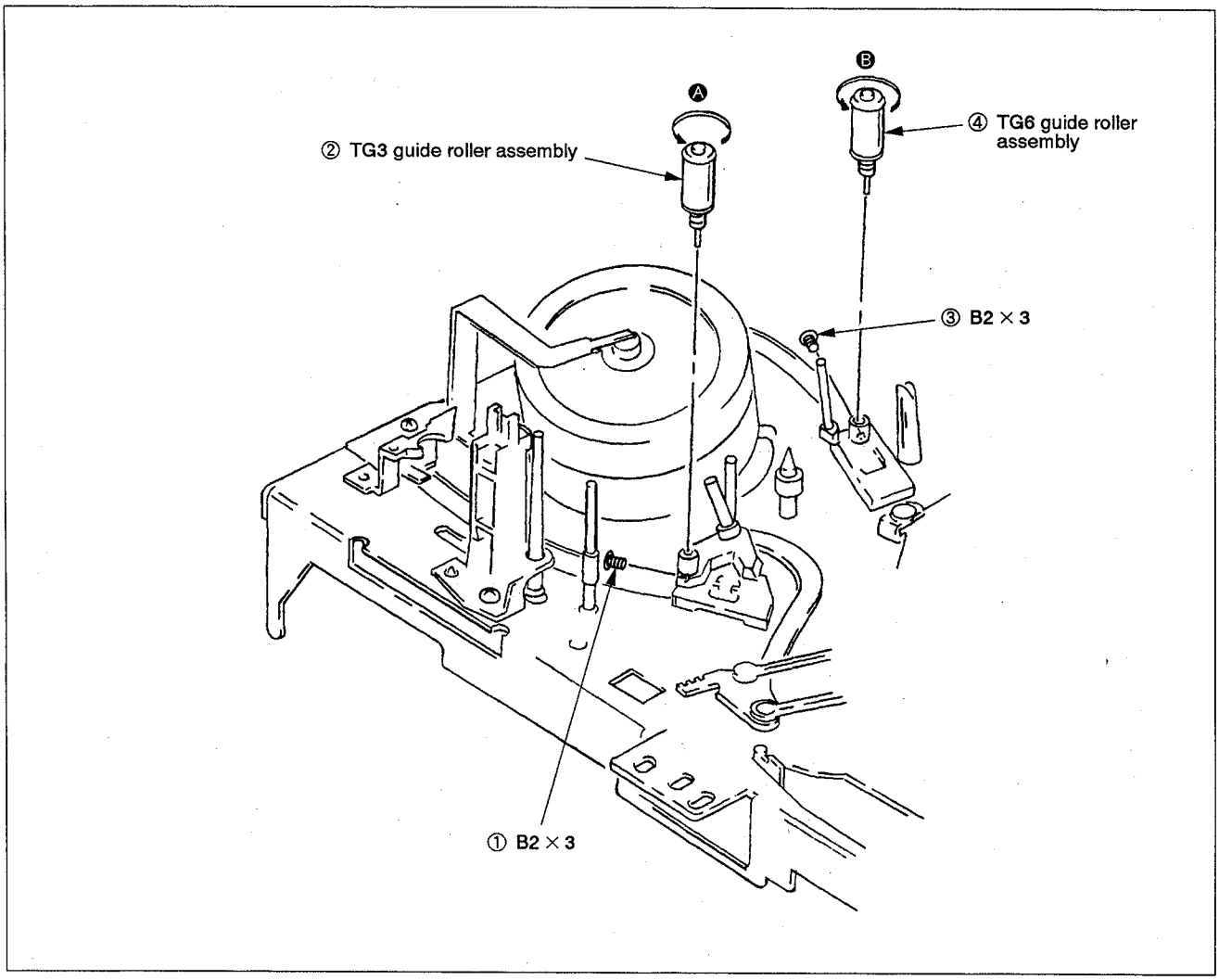

Fig. 3-8

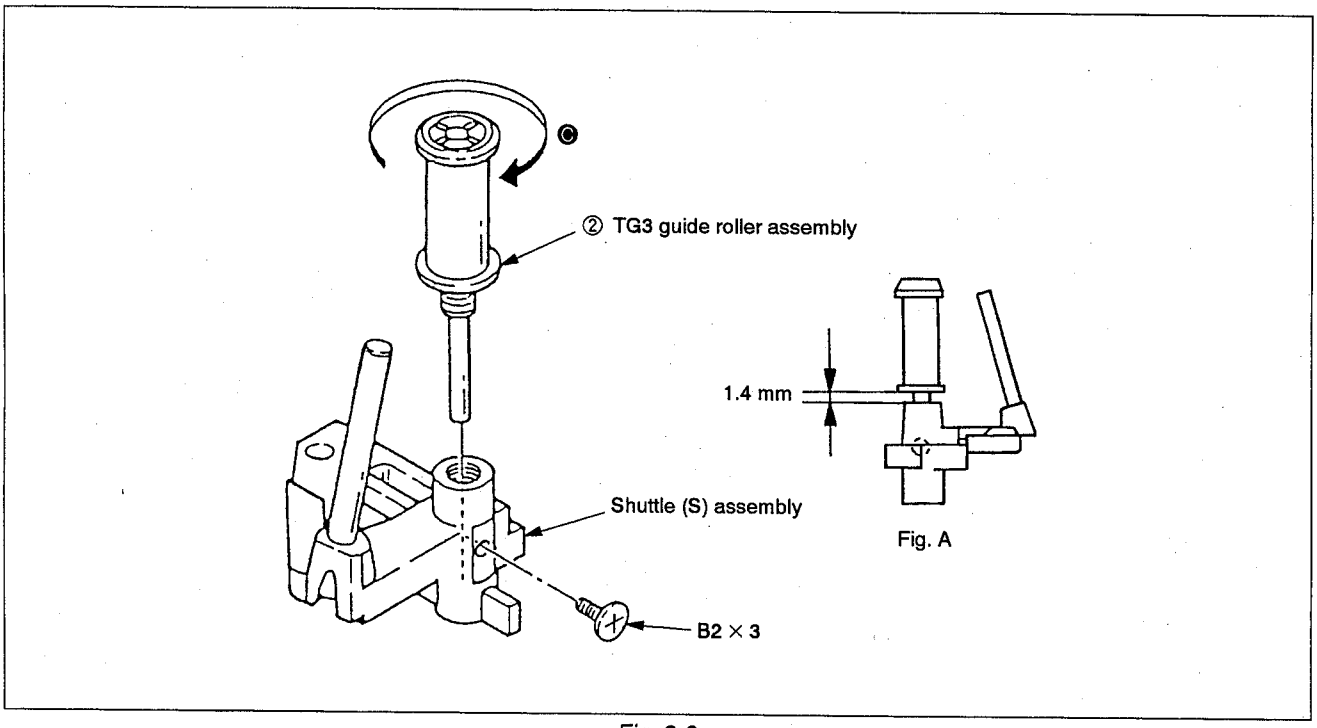

Fig. 3-9

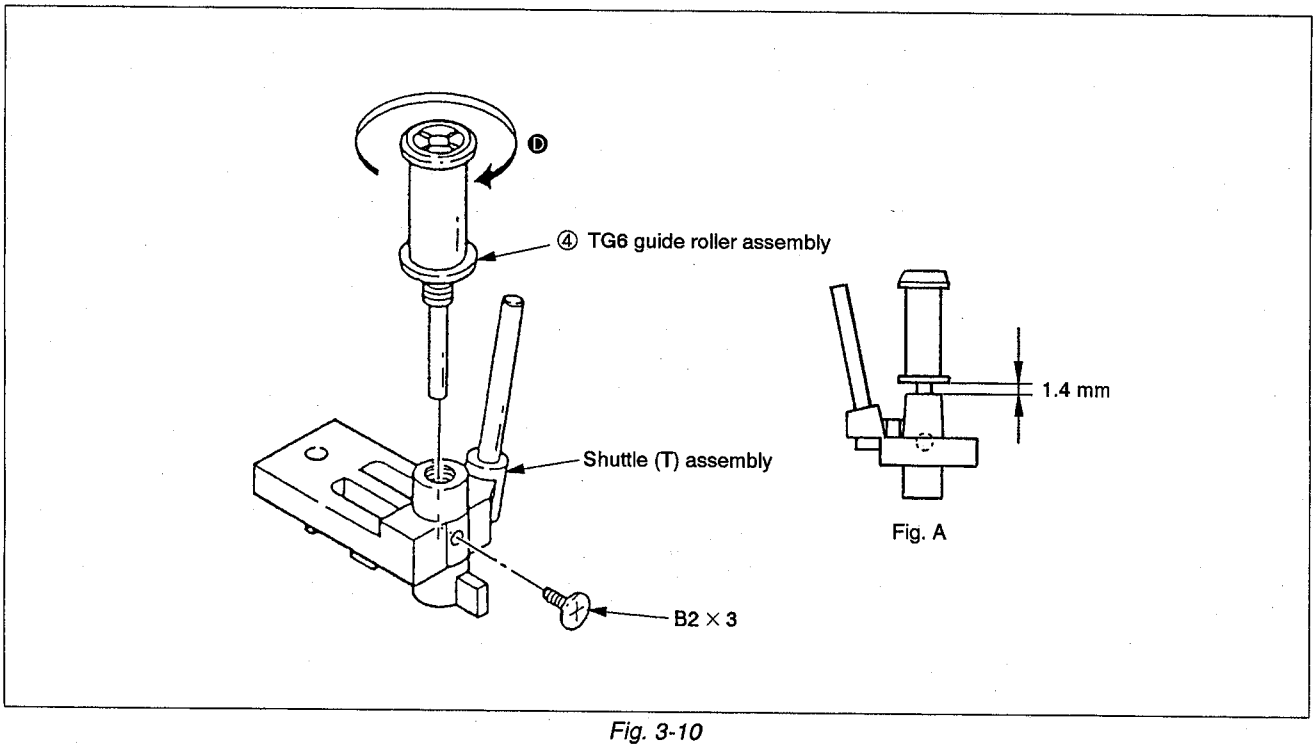

Fig. 3-10

3-9. CAPSTAN MOTOR (Fig. 3-11)

1) Remove timing belt. (Refer to 3-3.)
2) Remove CAP brake assembly. (Refer to 3-4.)
3) Remove screws ① to pull out capstan motor ②.

[Note on Mounting]

- Keep clean the surface contacts tape of capstan motor ②.
- On tightening screws ①, first tighten screw A temporarily, next tighten screws in the order B to C to A.

[Adjustment after Mounting]

- 4-1. Tape path adjustment.

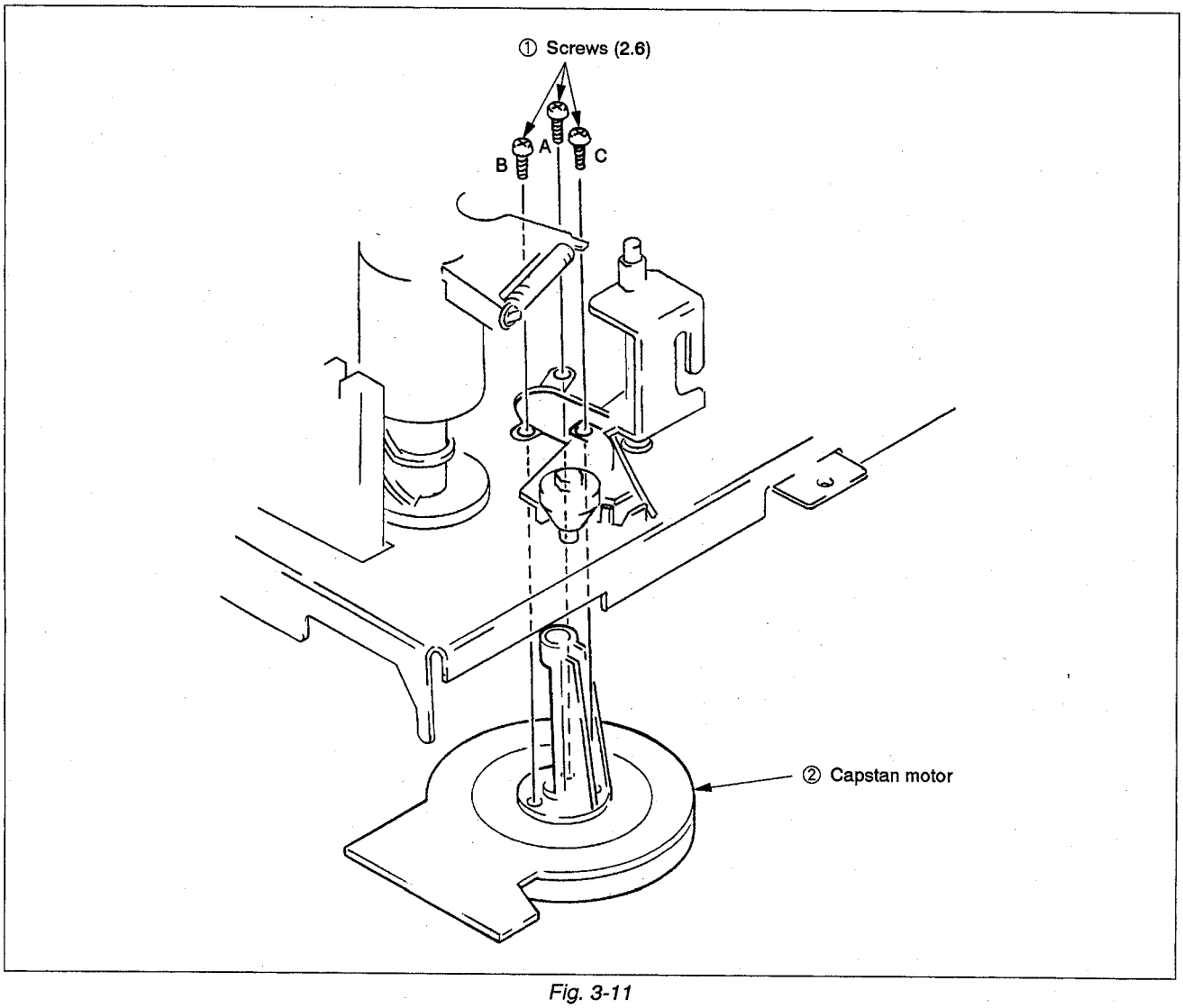

Fig. 3-11

3-10. MAIN BRAKE ASSEMBLIES S AND T (Fig. 3-12)

1) Remove tension spring ①.
2) Remove stopper washer (2) ② to remove neutrality arm ③.
3) Remove pendulum compulsion arm ④ and tension coil spring ⑤.
4) Remove stopper washer (2) ⑥ to remove main brake S assembly ⑦.
5) Remove stopper washer (2) ⑧ to remove main brake T assembly ⑨.

[Note on Mounting]

- Don't touch brake shoes Ⓐ and Ⓑ with bare hand.
- Apply FLOIL FG-055G (Jig Ref. No. J-12) to ☆ marked portions.

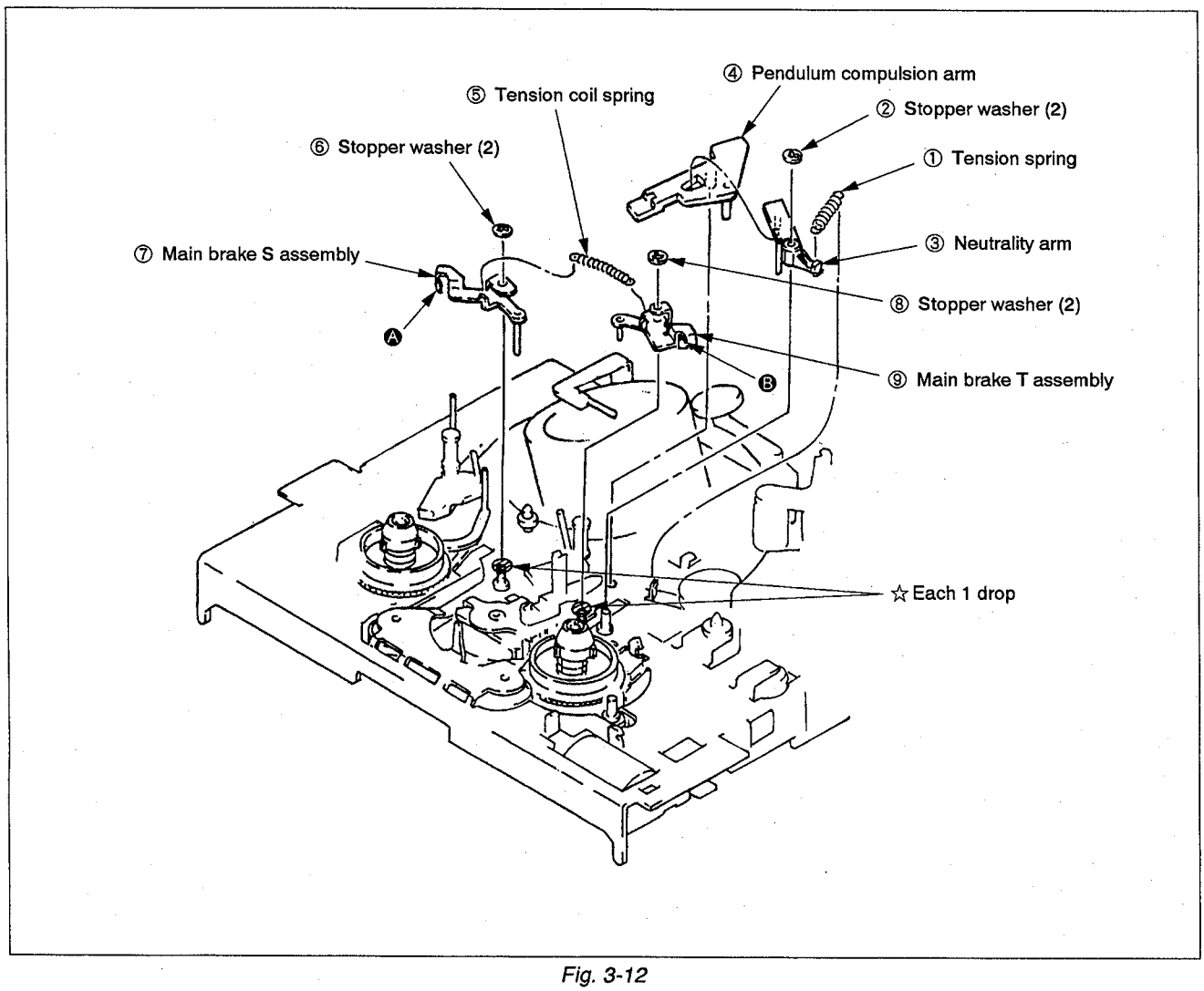

Fig. 3-12

3-11. SOFT BRAKE T ASSEMBLY (Fig. 3-13)

1) Remove pinch press block assembly. (Refer to 3-6.)
2) Remove lid opener ① carefully not to damage claw Ⓐ.
3) Remove tension spring ② from side Ⓑ to pull out soft brake T assembly ③.

[Note on Mounting]

• Don't touch brake shoes Ⓒ with bare hand.

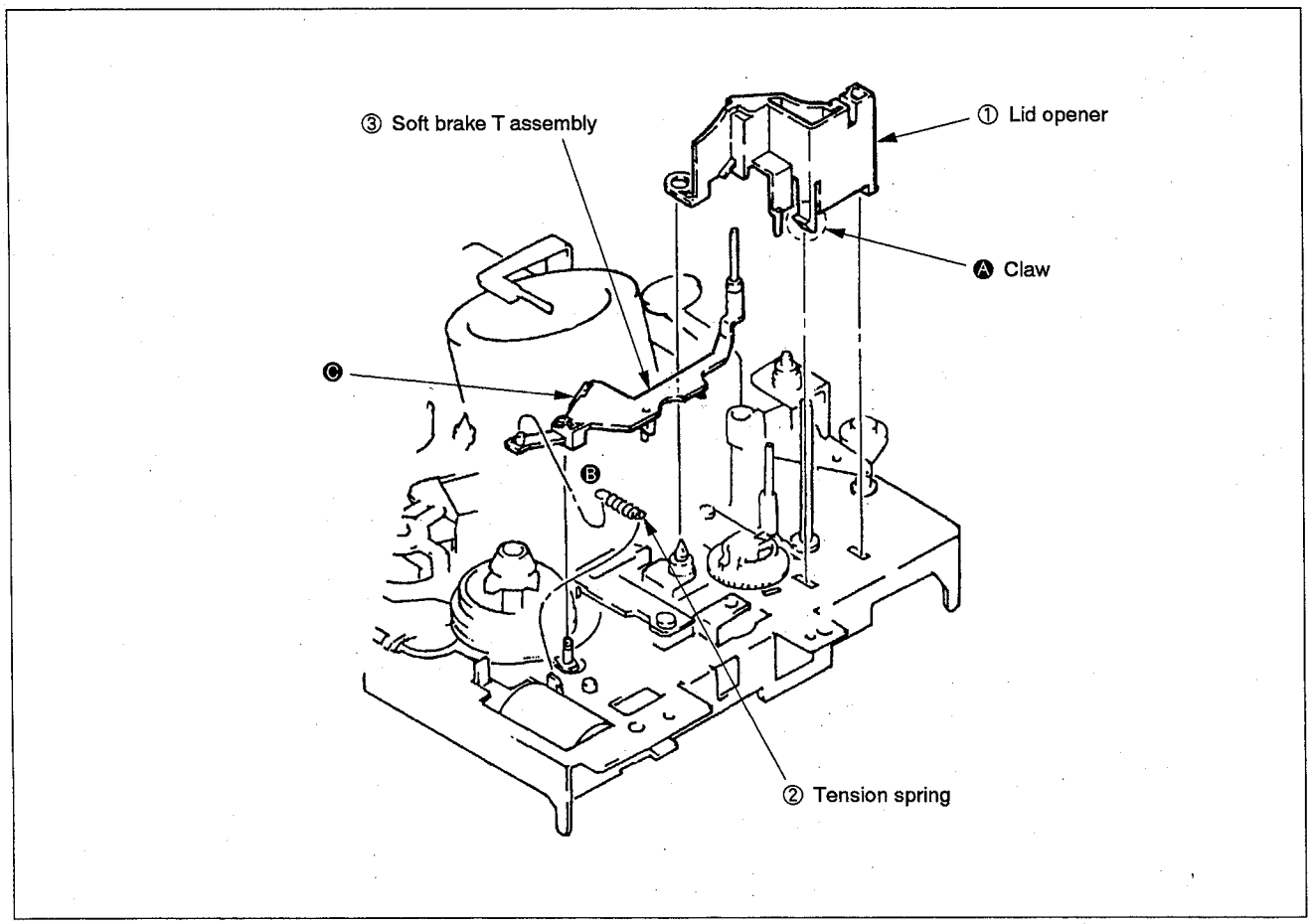

Fig. 3-13

3-12. RVS BRAKE ARM ASSEMBLY, REEL TABLE (T) ASSEMBLY (Fig. 3-14)

1) Remove main brake T assembly. (Refer to 3-10.)
2) Remove soft brake T assembly. (Refer to 3-11.)
3) Remove tension coil spring ① in the order Ⓐ to Ⓑ.
4) Remove RVS brake arm assembly ②.
5) Remove stopper washer (2) ③ to pull out reel table (T) assembly ④.

[Note on Mounting]

- Apply one drop of Diamond Oil NT-68 (Jig Ref. No. J-13) to ☆ marked portion before mounting reel table (T) assembly ④. (Fig. A)
- Don't touch the hatched portion on reel table (T) assembly ④ and brake shoe Ⓒ of RVS brake arm assembly ② with bare hand.

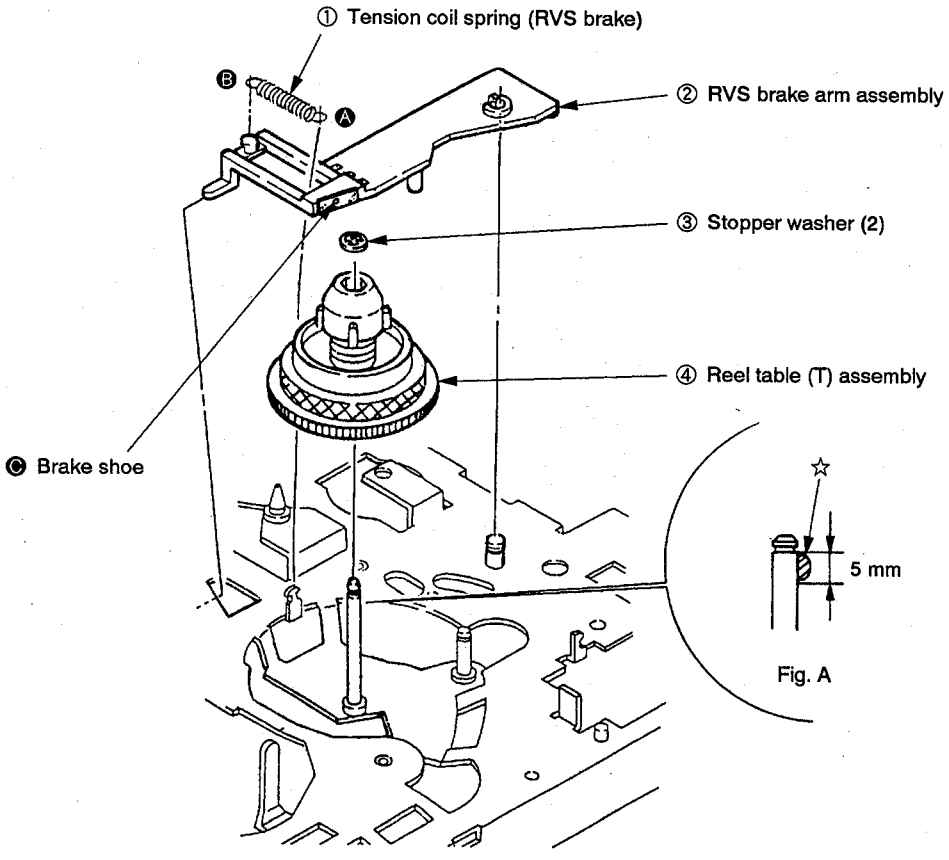

Fig. 3-14

3-13. TG8 ASSEMBLY (Fig. 3-15)

1) Remove TG8 retainer ① to pull out TG8 assembly ②.

[Note on Mounting]

- Apply FLOIL SG-055G (Jig Ref. No. J-12) to ☆ marked portion.
- Keep clean the surface contacts tape of TG8 assembly ②.
- Be careful not to change the shape of TG8 retainer ①.

[Adjustment after Mounting]

- 4-1. Tape path adjustment.

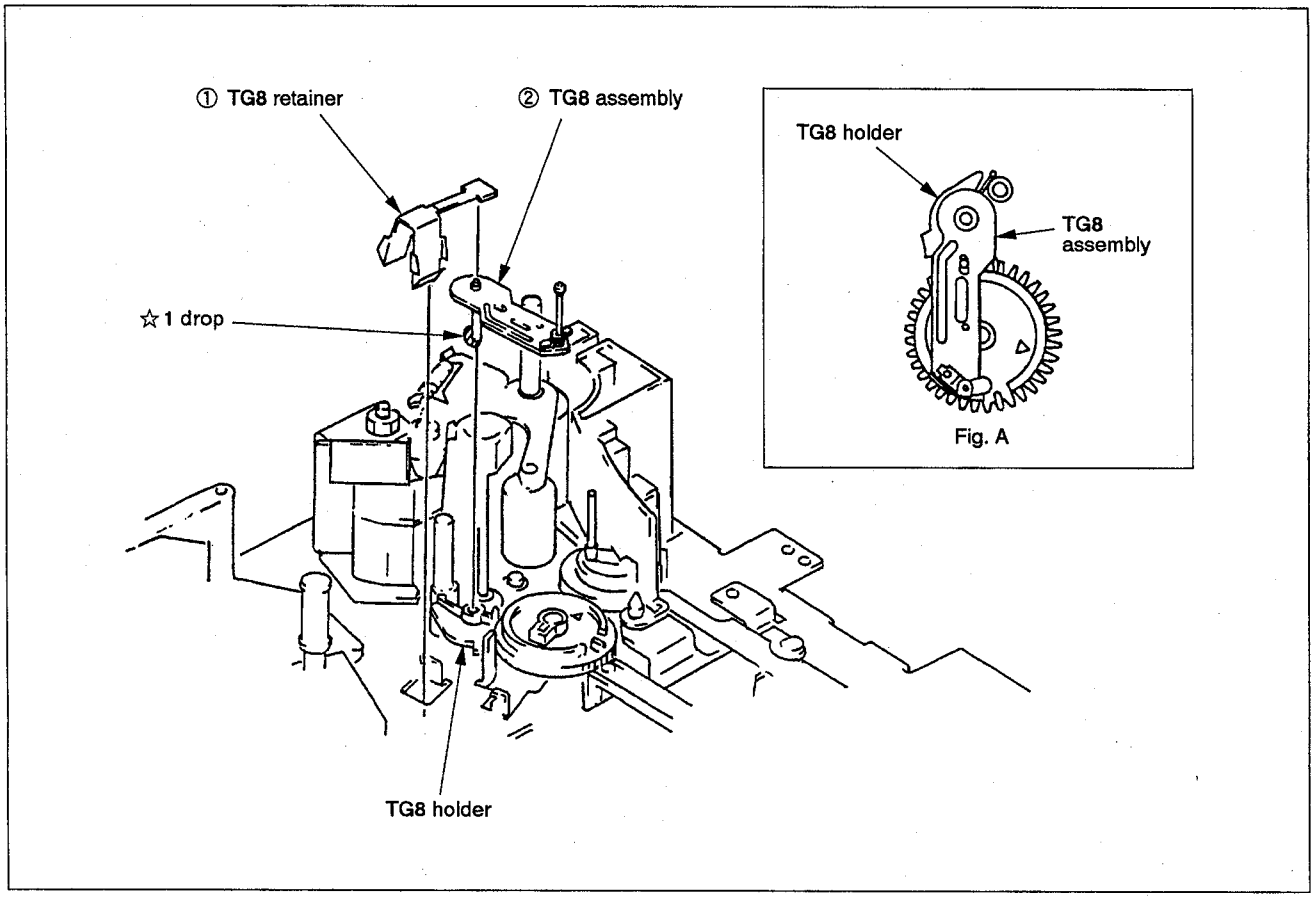

Fig. 3-15

3-14. TG8 HOLDER (Fig. 3-16)

1) Remove TG8 assembly. (Refer to 3-13)
2) Pull out TG8 holder ①.

[Note on Mounting]

• Be careful about the direction of TG8 holder ①. (Ⓐ of Fig. A)

[Adjustment after Mounting]

• 4-1. Tape path adjustment.

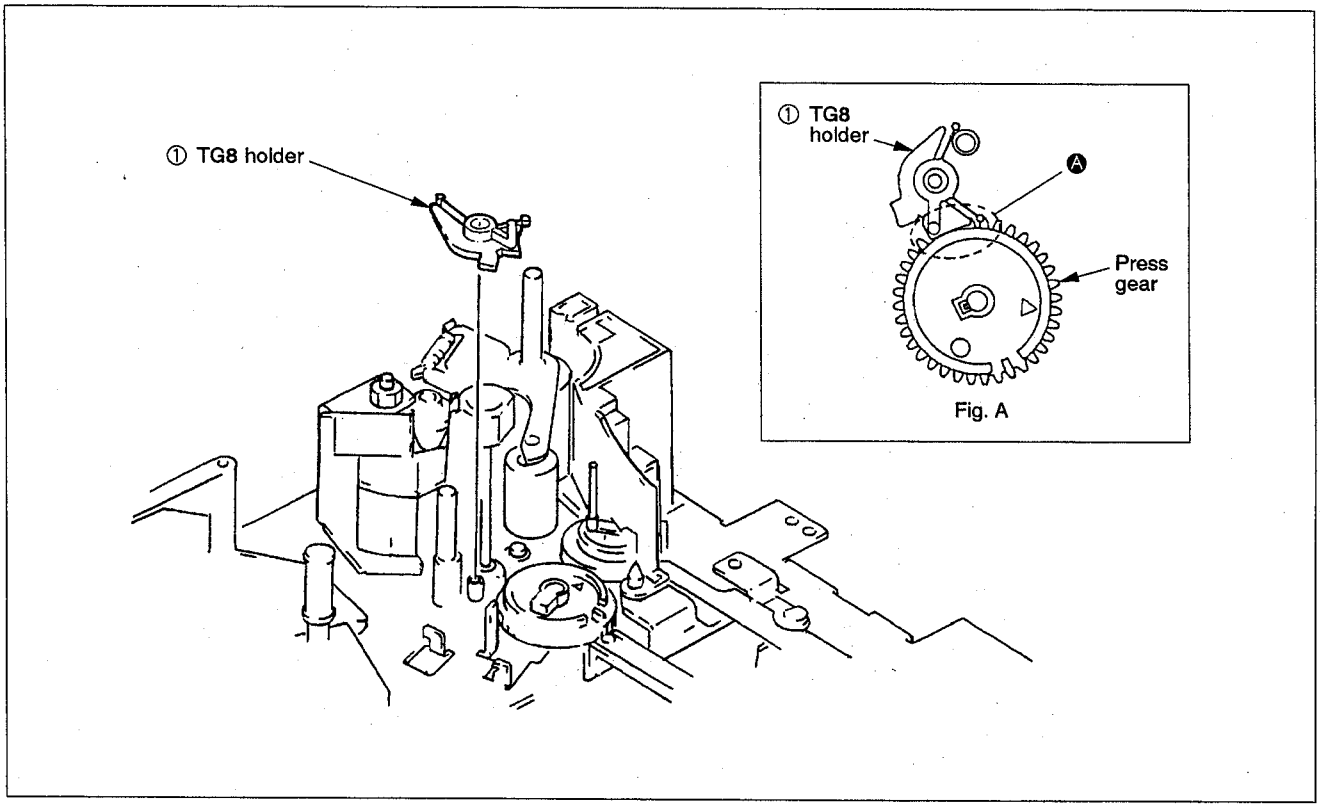

Fig. 3-16

3-15. TG8 AND PRESS GEARS (Fig. 3-17)

1) Remove pinch press block assembly. (Refer to 3-6.)
2) Remove soft brake T assembly. (Refer to 3-11.)
3) Remove TG8 assembly. (Refer to 3-13.)
4) Remove TG8 holder. (Refer to 3-14.)
5) Pull out TG8 gear ① or press gear ②.

[Note on Mounting]

- Adjust the holes on gears to the holes on chassis. (Fig. A)
- Adjust the arrows carved on gears each other. (Fig. A)

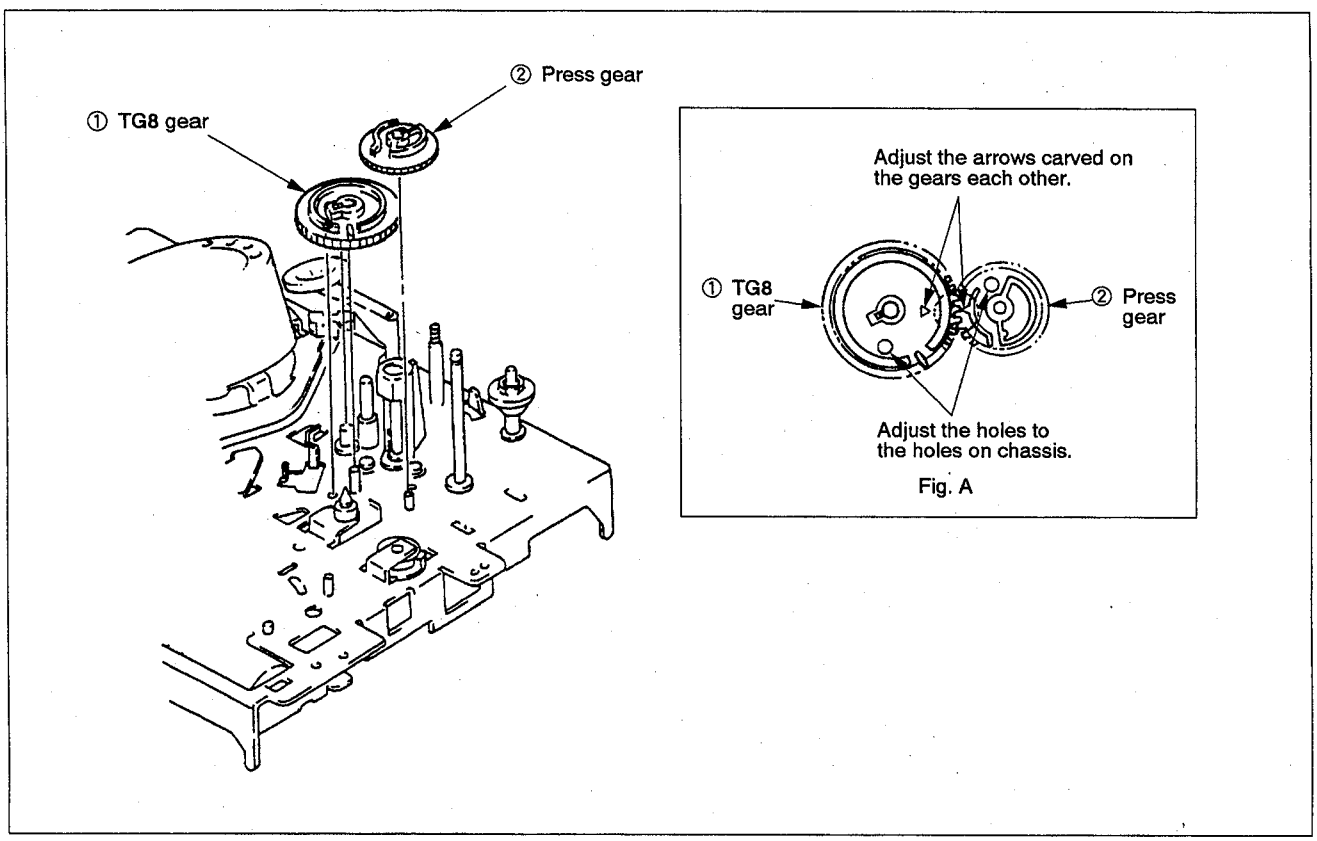

Fig. 3-17

3-16. CAM MOTOR CHASSIS BLOCK ASSEMBLY, UPPER/LOWER COMMUNICATION GEAR (Fig. 3-18)

1) Remove timing belt. (Refer to 3-3.)
2) Remove CAP brake assembly. (Refer to 3-4.)
3) Remove screws ① to remove cam motor chassis assembly ②.
4) Pull out upper/lower communication gear ③.

[Note on Mounting]

- First, check main slider ④ slides fully in the arrow Ⓔ direction.
- Set rotary encoder switch position to "E" seen from the window of cam motor chassis. (Fig. A)
- Tighten screws ① in the order Ⓐ to Ⓑ to Ⓒ to Ⓓ.

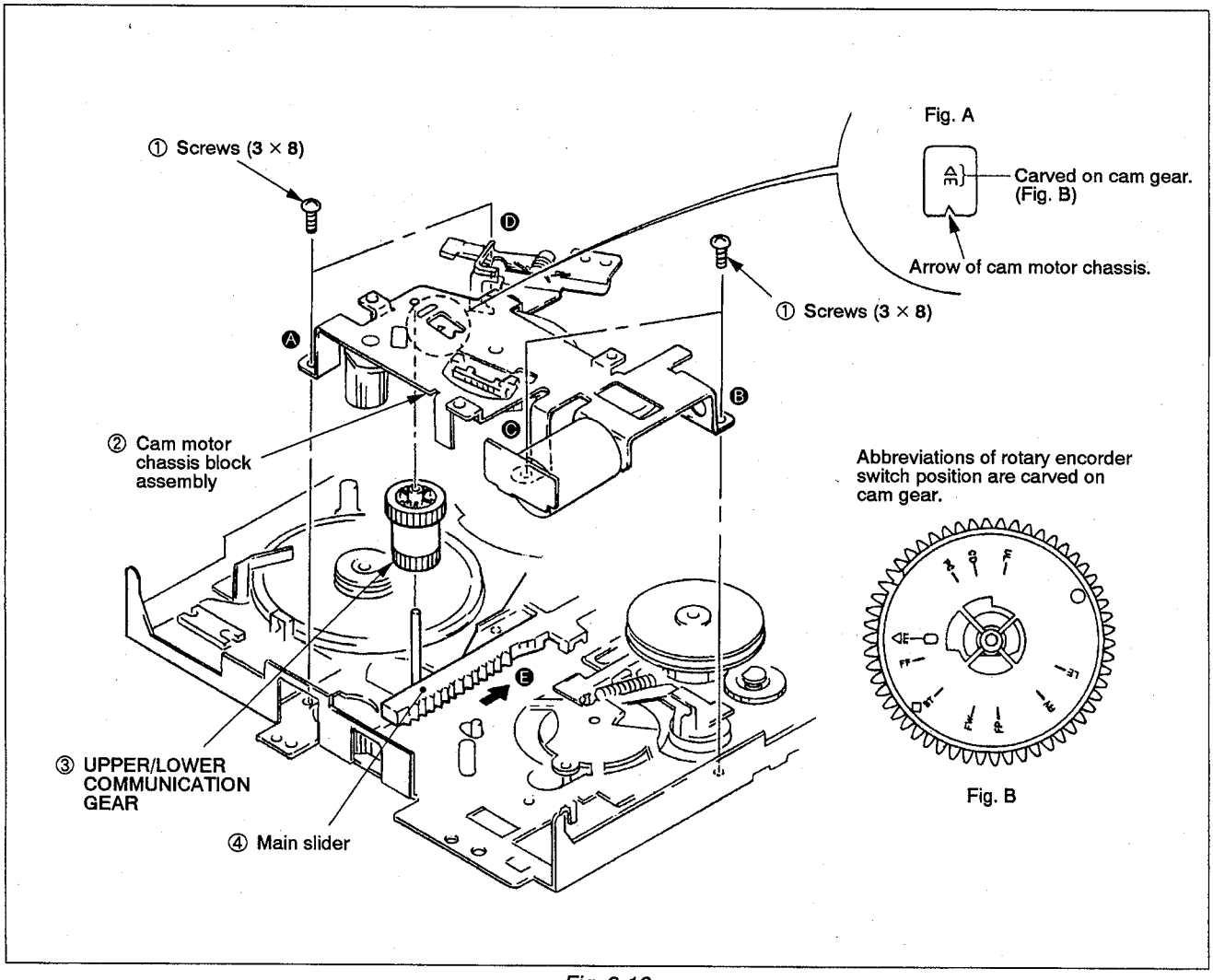

Fig. 3-18

3-17. ROTARY ENCODER SWITCH (Fig. 3-19)

1) Remove timing belt. (Refer to 3-3.)
2) Remove CAP brake assembly. (Refer to 3-4.)
3) Remove cam motor chassis block assembly (Refer to 3-15.) and turn upside on the bottom.
4) Remove stopper washer (2) ① to pull out worm wheel ②.
5) Remove stopper washer (2) ③ to pull out cam gear ④.
6) Pull out FL driving gear ⑤ and rotary encoder switch ⑥.

[Note on Mounting]

- Apply FLOIL SG-055G (Jig Ref. No. J-12) to ☆ marked portions. (Fig. 3-19, A)
- Adjust the hole Ⓐ to the hole on cam motor chassis. (Fig. B)
- Adjust the holes Ⓑ and Ⓒ to the hole on cam motor chassis. (Fig. C)

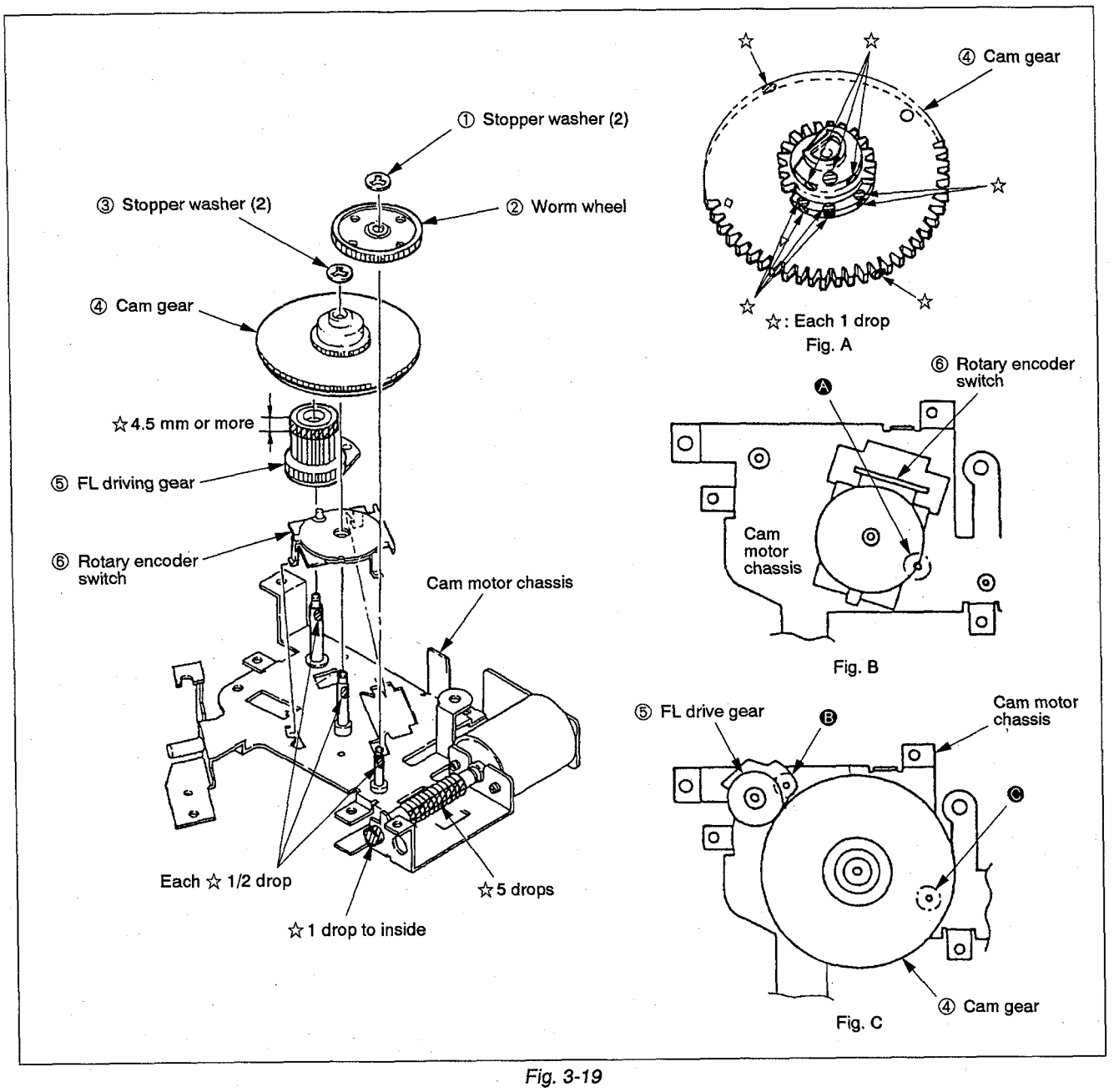

Fig. 3-19

3-18. MAIN SLIDER (Fig. 3-20)

1) Remove timing belt. (Refer to 3-3.)
2) Remove CAP brake assembly. (Refer to 3-4.)
3) Remove cam motor chassis block assembly. (Refer to 3-16.)
4) Remove screw ① to remove retainer ②.
5) Pull out main slider ③.

[Note on Mounting]

- Apply FLOIL SG-055G (Jig Ref. No. J-12) as shown in Fig. A.
- At the last, slide main slider fully in the arrow Ⓐ direction.

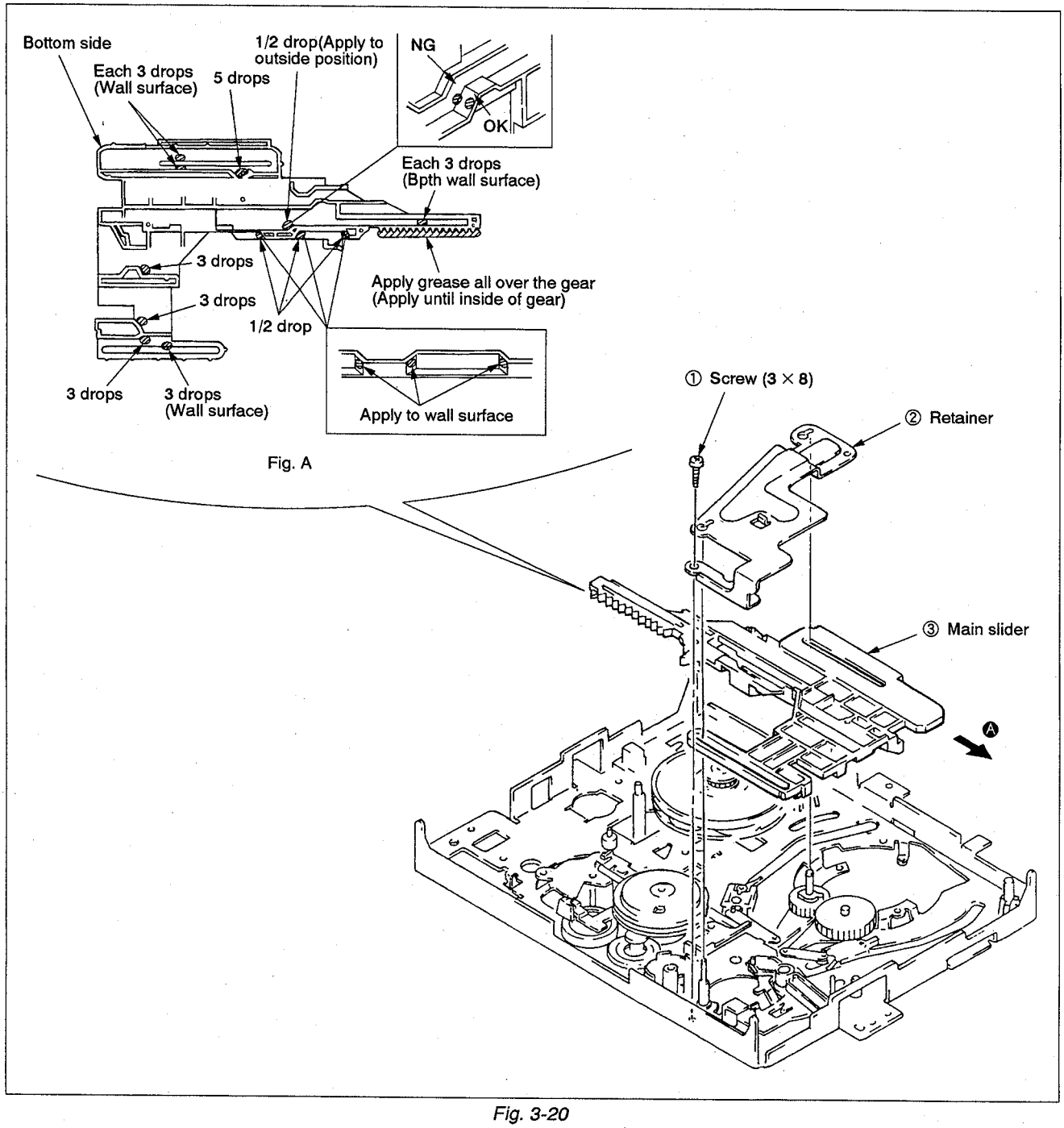

Fig. 3-20

3-19. SHUTTLE T BLOCK AND LOADING GEAR T BLOCK ASSEMBLIES (Fig. 3-21)

1) Remove timing belt. (Refer to 3-3.)
2) Remove CAP brake assembly. (Refer to 3-4.)
3) Remove cam motor chassis block assembly. (Refer to 3-16.)
4) Remove main slider. (Refer to 3-18.)
5) Remove screw ① to remove loading leaf (T) spring ② and shuttle T block assembly ③.
6) Pull out loading gear T block assembly ④.

[Note on Mounting]

- Adjust the phase Ⓐ between loading gear (T) and loading gear (S). (Fig. A)
- Keep clean the surface contacts tape of shuttle T block assembly ③.

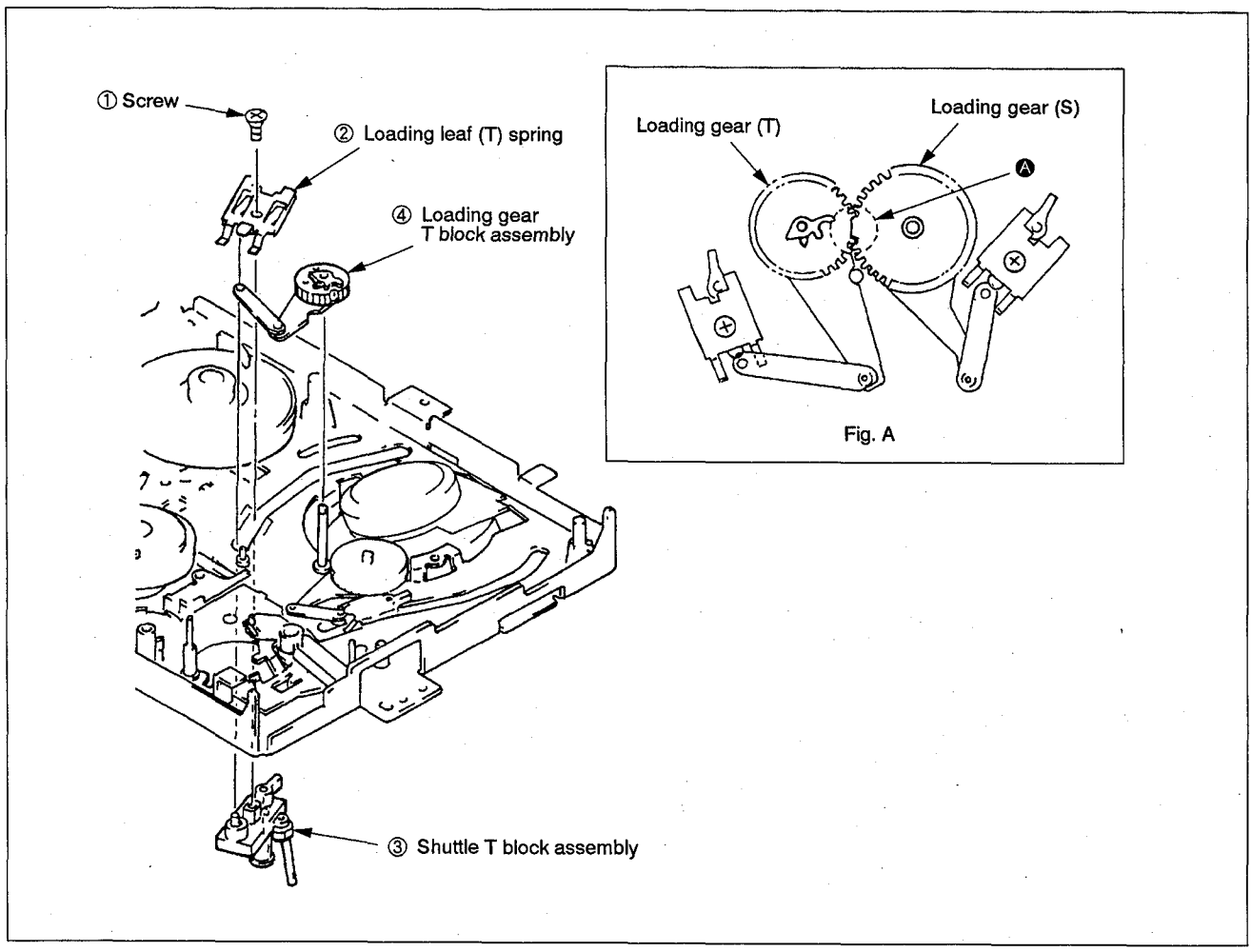

Fig. 3-21

3-20. SHUTTLE S BLOCK AND LOADING GEAR S BLOCK ASSEMBLIES (Fig. 3-22)

1) Remove timing belt. (Refer to 3-3.)
2) Remove CAP brake assembly. (Refer to 3-4.)
3) Remove cam motor chassis block assembly. (Refer to 3-16.)
4) Remove main slider. (Refer to 3-15.)
5) Remove screw ① to remove loading leaf (S) spring ② and shuttle S block assembly ③.
6) Pull out loading gear S block assembly ④.

[Note on Mounting]

- Adjust the phase Ⓐ between loading gear (S) and loading gear (S). (Fig. A)
- Keep clean the surface contacts tape of shuttle S block assembly ③.

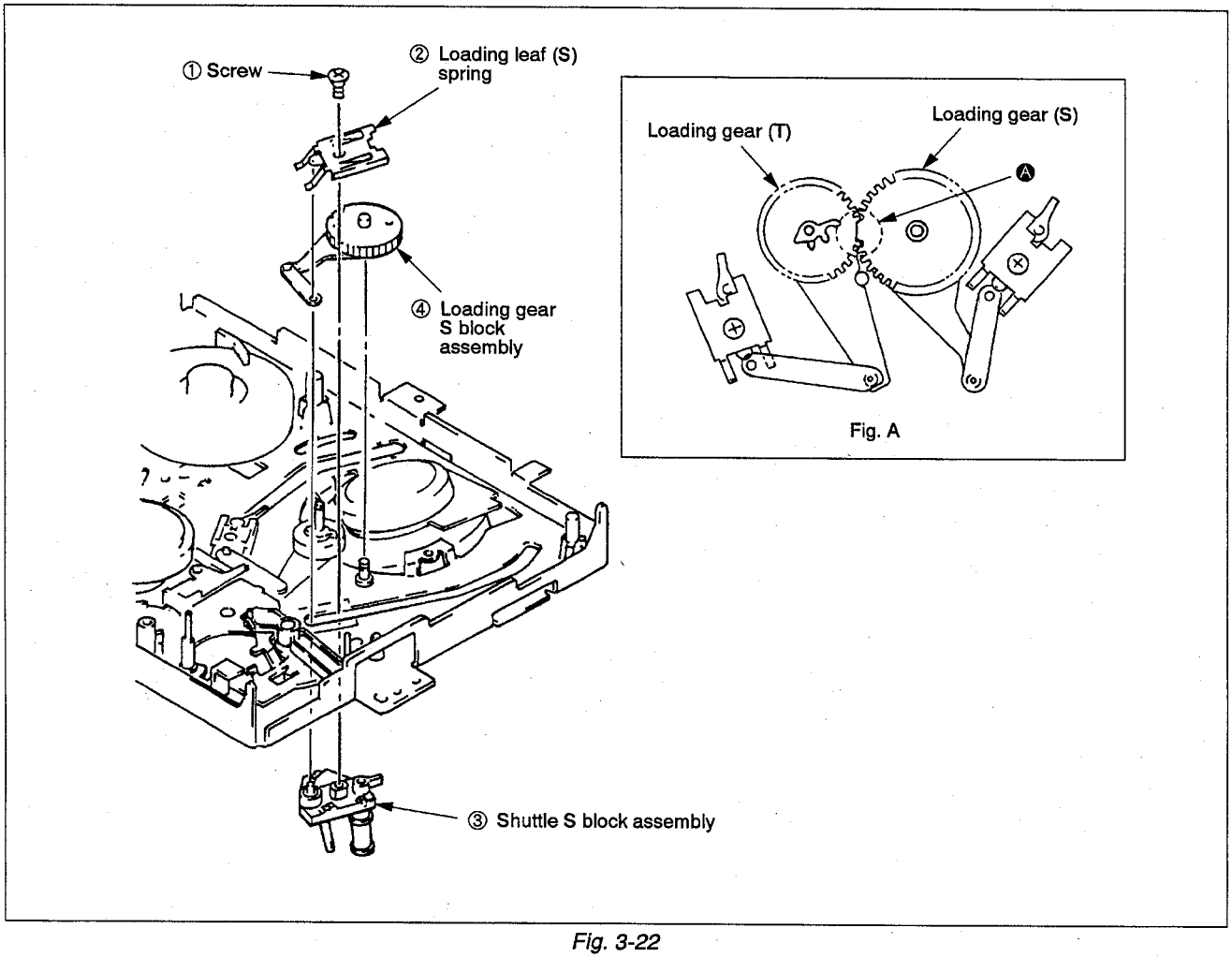

Fig. 3-22

3-21. REEL TABLE (S) ASSEMBLY (Fig. 3-23)

1) Remove tension spring ① from the chassis side.
2) Remove stopper washer (2) ② to pull out soft brake (S) ③.
3) Move TG1 band ④ over the reel table.
4) Remove stopper washer (2) ⑤.
5) While pressing main brake S assembly ⑥, pull out reel table (S) assembly ⑦.

[Note on Mounting]

- Apply one drop of Diamond Oil NT-68 (Jig Ref. No. J-13) to ☆ marked portion before mounting reel table (S) assembly ⑥. (Fig. A)
- Don't touch the hatched portion on reel table (S) assembly ⑥ with bare hand.

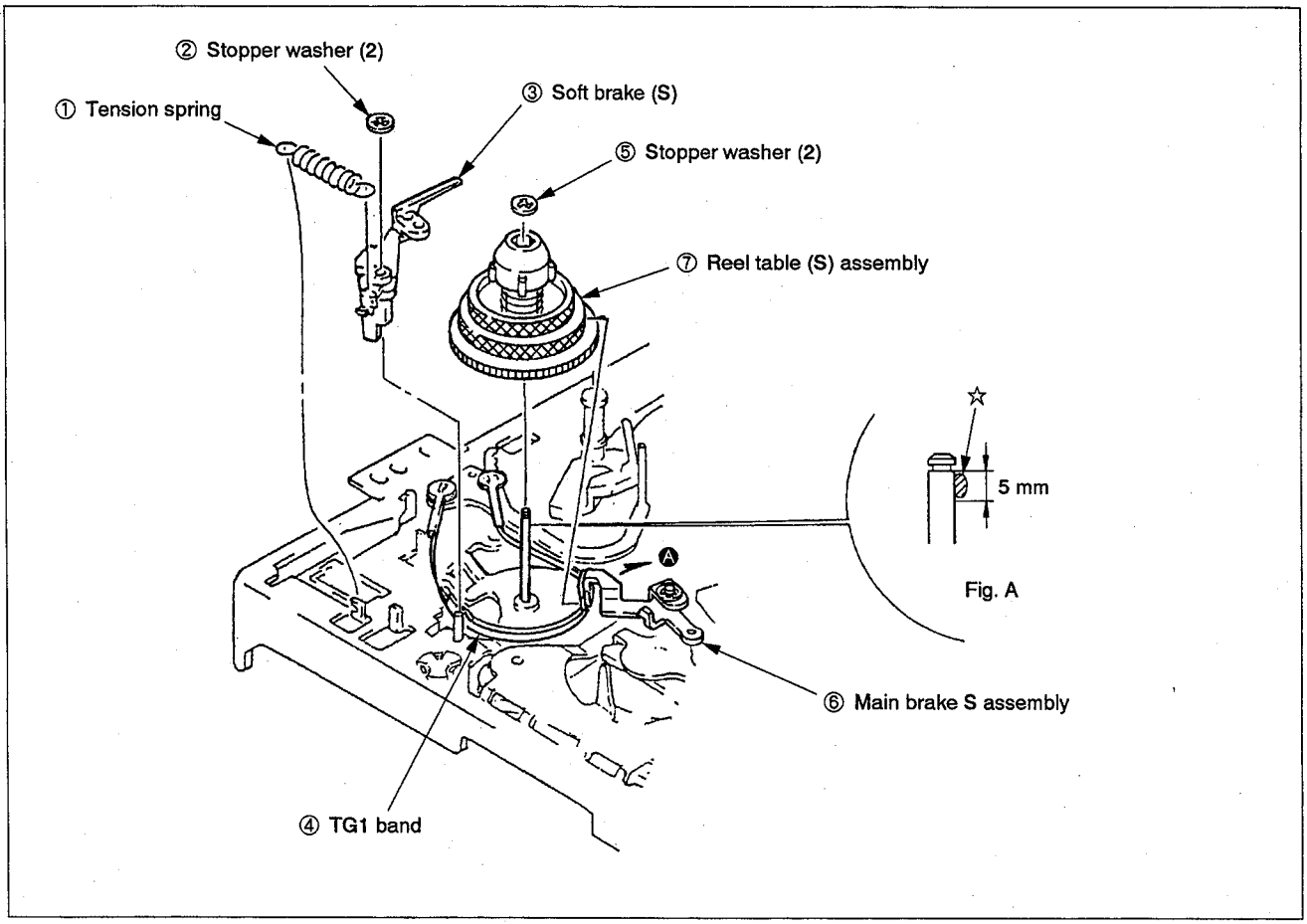

Fig. 3-23

3-22. TG1 ASSEMBLY (Fig. 3-24)

1) Set the mechanism to the loading-end condition referring to 1-1. (Cam gear indicates "LE". (Refer to Fig. A and B of Fig. 3-18.))
2) Remove tension spring ① in the order Ⓐ to Ⓑ.
3) Remove stopper washer (2) ② to pull out TG1 assembly ③.

[Note on Mounting]

- Apply one drop of Diamond Oil NT-68 (Jig Ref. No. J-13) to ☆ marked portion.
- Keep clean the felt side of TG1 assembly.

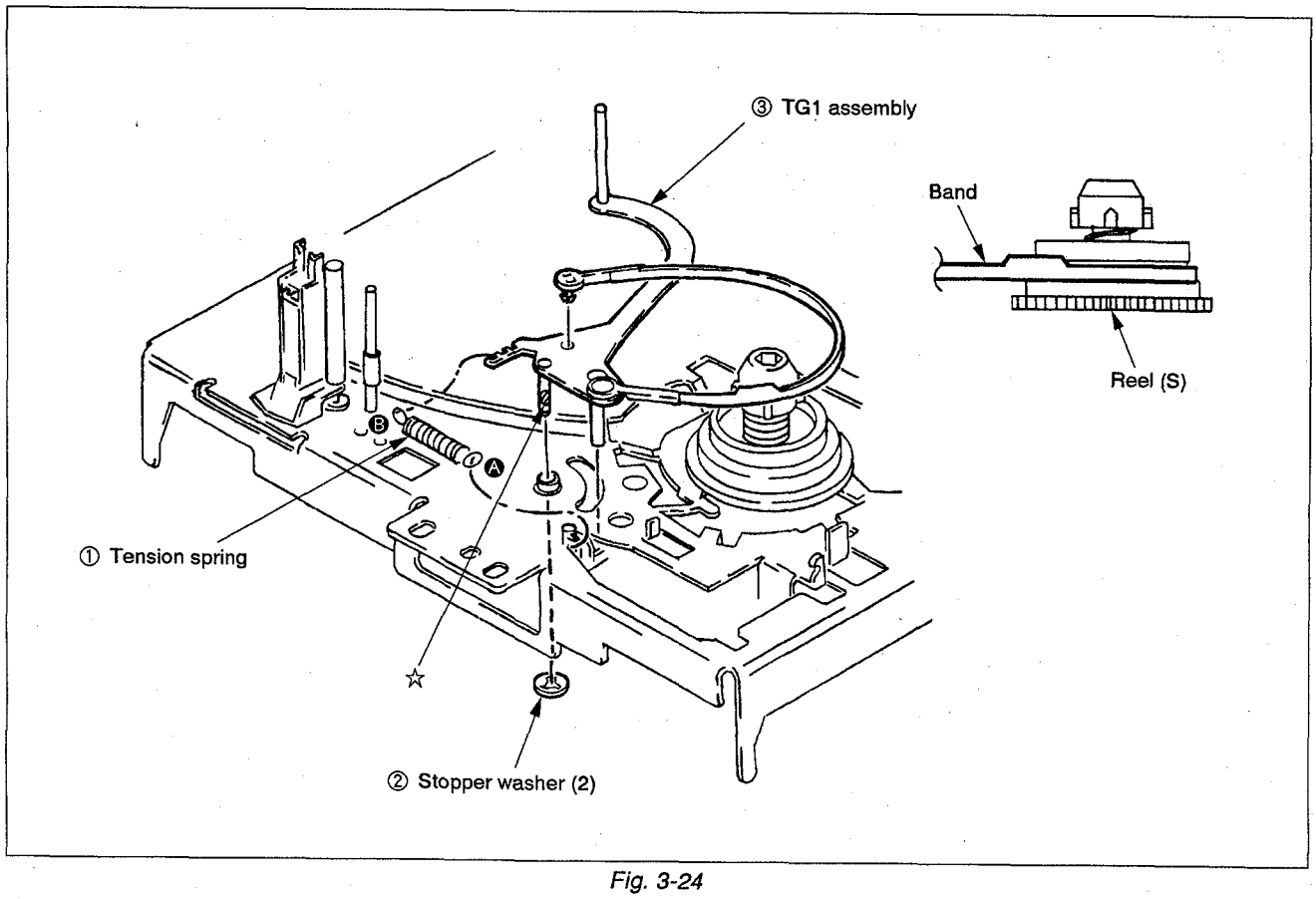

Fig. 3-24

3-23. S WINDING BLOCK ASSEMBLY (Fig. 3-25)

1) Remove timing belt. (Refer to 3-3.)
2) Remove CAP brake assembly. (Refer to 3-4.)
3) Remove cam motor chassis block assembly. (Refer to 3-16.)
4) Remove main slider. (Refer to 3-18.)
5) Remove stopper washer (2) ① to pull out S winding block assembly ②.
6) Remove torsion spring ③.

[Note on Mounting]

- At the last, hang torsion spring ② to the position Ⓐ.
- Apply FLOIL SG-055G (Jig Ref. No. J-12) to ☆ marked portions.

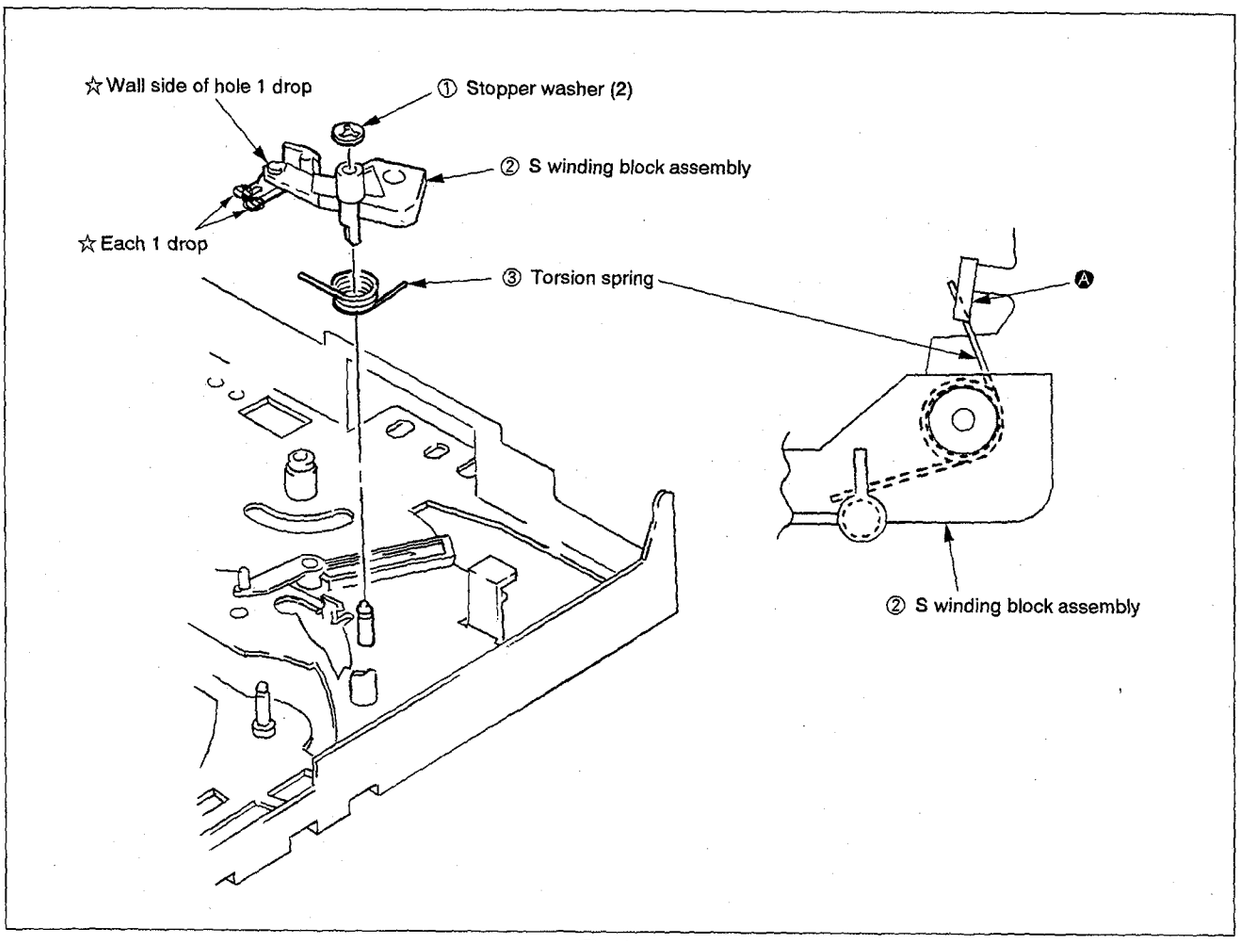

Fig. 3-25

3-24. TRIGGER LEVER AND RKB BLOCK ASSEMBLIES (Fig. 3-26)

1) Remove timing belt. (Refer to 3-3.)
2) Remove CAP brake assembly. (Refer to 3-4.)
3) Remove cam motor chassis block assembly. (Refer to 3-16.)
4) Remove main slider. (Refer to 3-18.)
5) Remove tension spring ① in the order Ⓐ to Ⓑ to remove trigger lever assembly ②.
6) Remove screws (3 × 8) ③ to remove RKB block assembly ④.

[Note on Mounting]

• Apply FLOIL SG-055G (Jig Ref. No. J-12) to ☆ marked portions on trigger lever assembly. (Fig. A)

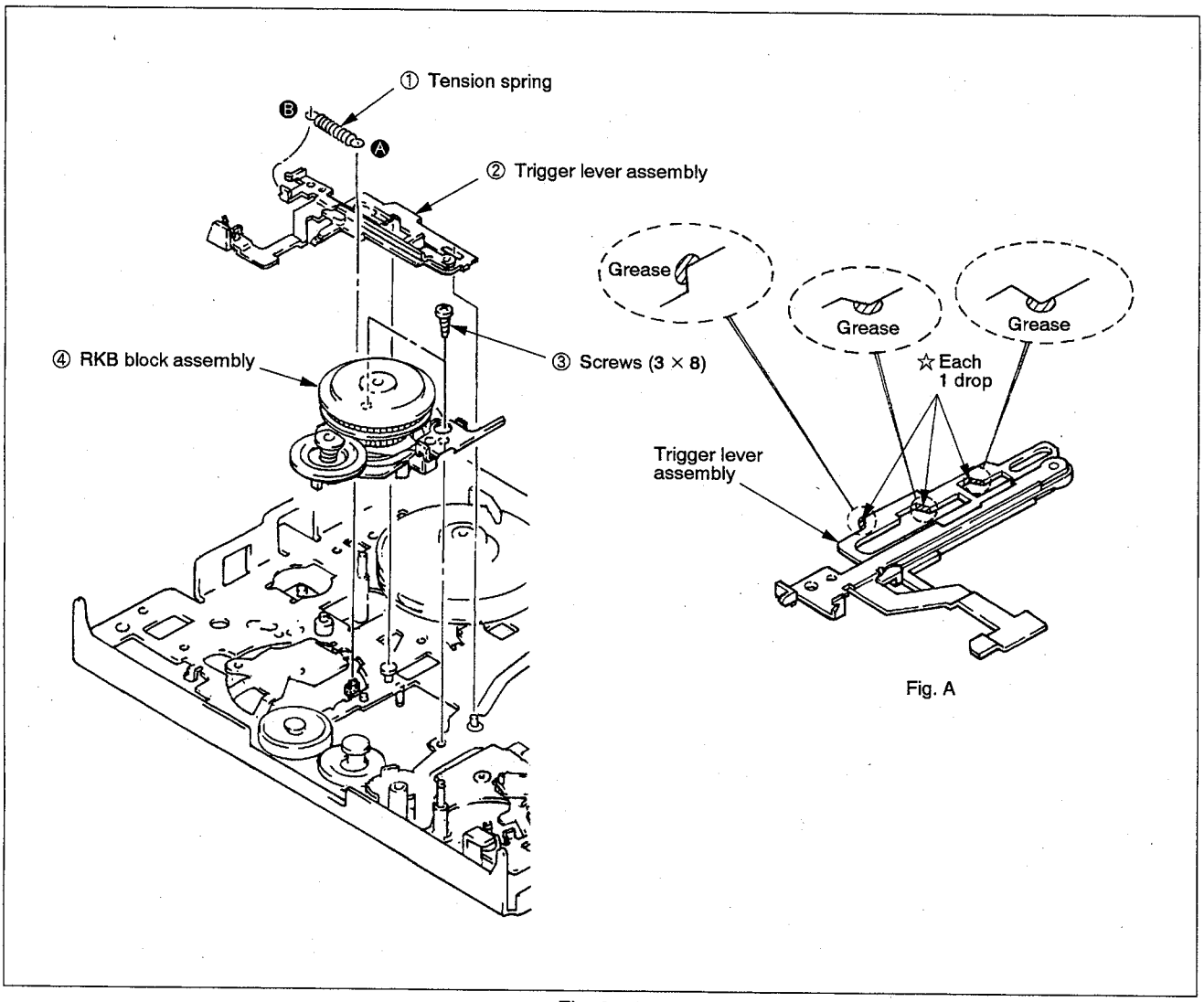

Fig. 3-26

4. ADJUSTMENT

4-1. TAPE PATH ADJUSTMENT

The "Tape path" refers to the route of the tape from the supply reel disk to the take-up reel disc via the video heads.
Each component part of the tape transport system particularly the surface of parts which make direct contact with the tape must always be kept clean, free of dust, oil, scratches and so forth.
The tape path system is factory preadjusted, when parts of the tape transport system are replaced, be sure to make the required adjustments as precisely as possible in order to ensure stable tape transport.

4-1-1. TENSION REGULATOR (TG1) POSITION/ TENSION ADJUSTMENT (Fig. 4-1)

Purpose: stabilizes contact of the video head and the tape to maintain the tension of the tape so that it feeds at a constant level.

- **Position adjustment**

Mode	Treading is completed without a cassette loaded
Adjustment locations	Eccentric pin of TG1 band assembly

[Adjustment Method]

1) Allow the unit to go through the threading procedure without a cassette loaded.
2) Set the unit to play back, then turn the eccentric pin so that the tip of tension arm goes to the left side line carved on the mechanical chassis. (Fig. A)
3) After adjustment, go through the loading procedure once more without a cassette loaded, then check the position of the tension arm.

- **Tension adjustment**

Mode	Playback
Measuring instrument/tool	Torque cassete
Adjustment locations	Position for hooking the tension spring
Specified value	36 to 44 g•cm

[Adjustment Method]

1) Playback the torque cassette.
2) Check that the center value deviation reading on the torque cassette meets with the standards.
3) When the reading is higher than the standards: Move the spring toward direction Ⓐ.
   When the reading is less than the standards: Move the spring toward direction Ⓑ.

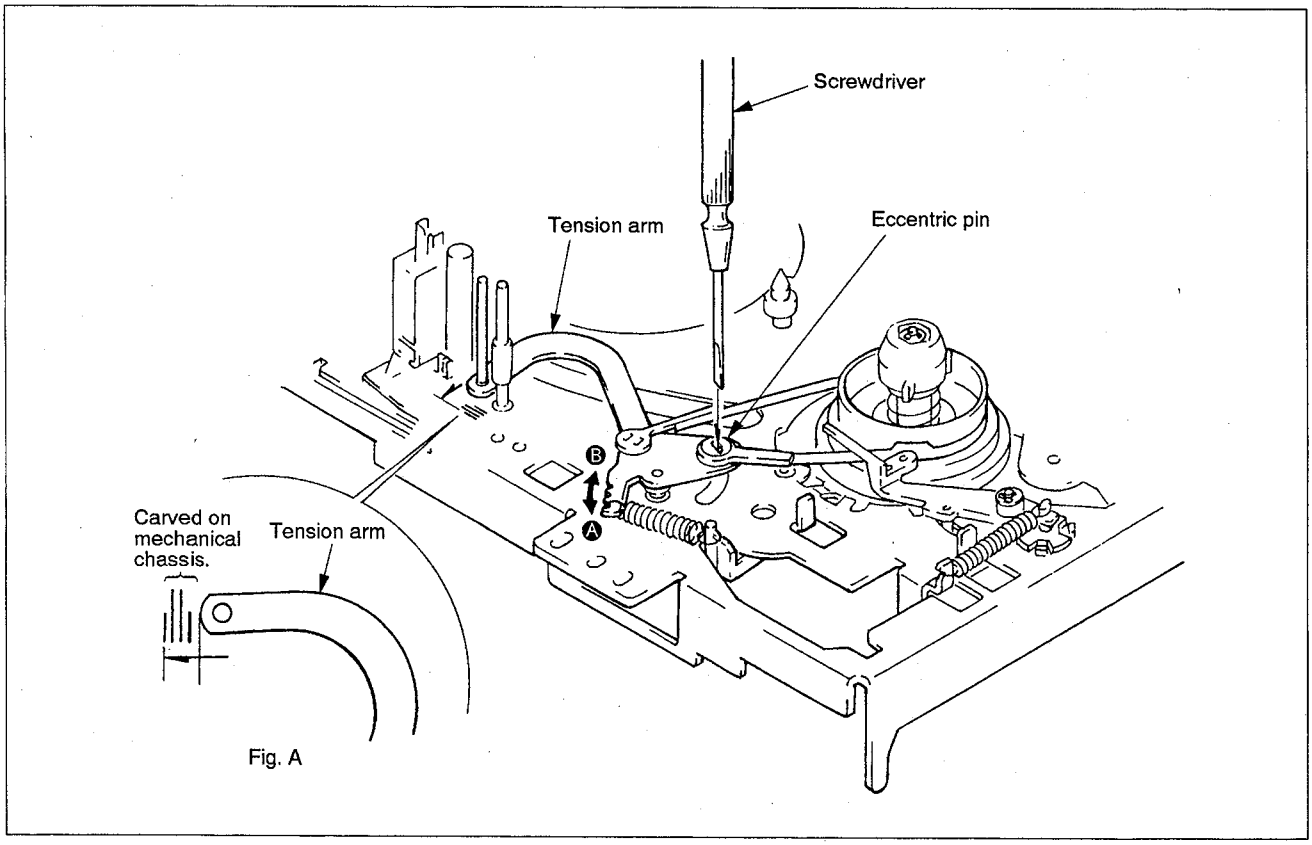

Fig. 4-1

4-1-2. TG8 GUIDE ROLLER HEIGHT ADJUSTMENT (Fig. 4-2)

Mode	Playback
Jig	Blank tape
Adjustment locations	Guide roller height adjustment screw
Specified value	0 to 0.1 mm

Procedure:

1) Set the tape, during CUE playing back, check the height from lower flange of TG7 to the running tape. (Fig. A)
2) During REV playing back, check the height from lower flange of TG7 to the running tape. (Fig. B)
3) When the difference between items 1) and 2) doesn't go to specified value, adjust by turning TG8 guide roller height adjustment screw.
4) Check the tape is creased or not between the capstan and TG8, adjust with TG8 guide roller height adjustment screw so that the tape is not creased during normal playback, CUE and REV.

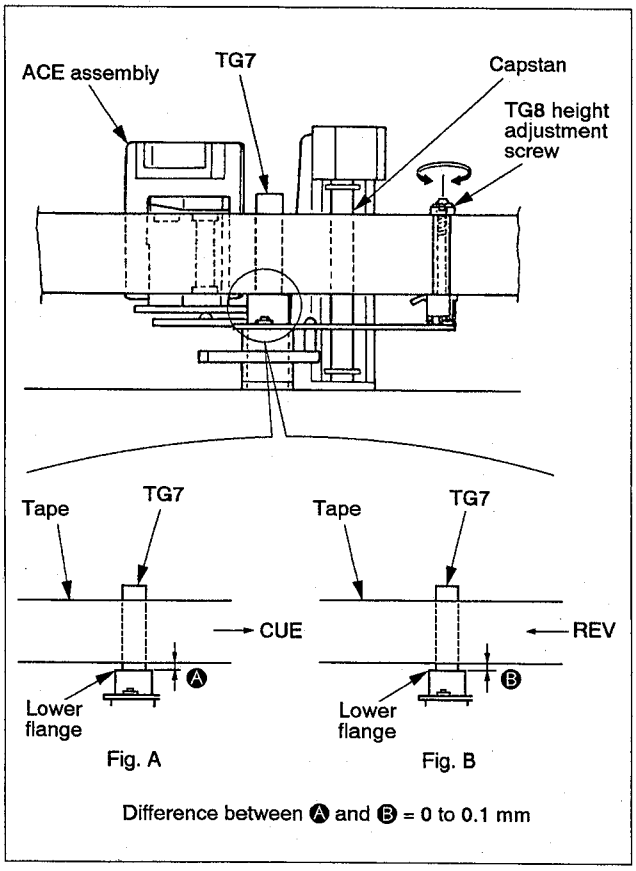

Fig. 4-2

4-1-3. HEIGHT ADJUSTMENT OF GUIDE ROLLERS NO. 3 AND NO. 6 (Fig. 4-3)

Mode	Playback
Signal	Alignment tape
Measuring instrument	Oscilloscope
Measuring point	CH-1: Connector PB RF pin for RF PC board check. CH-2: Connector RF SW P pin for RF PC board check.
Adjustment locations	Guide roller height adjuster screw

[Adjustment Method]

1) Tracking (playback): Turn off the auto tracking, then press the tracking buttons ▽ and △ simultaneously to set the tracking at the center position.
   (If adjustment is made after the drum is replaced, the tracking must be set at the max. RF output position.)
2) Height adjuster screw: Even out the RF output waveforms.
3) Press the tracking buttons (playback), ▽ and △ alternately.
4) Check that RF output drops the same amount at the front and rear edges.

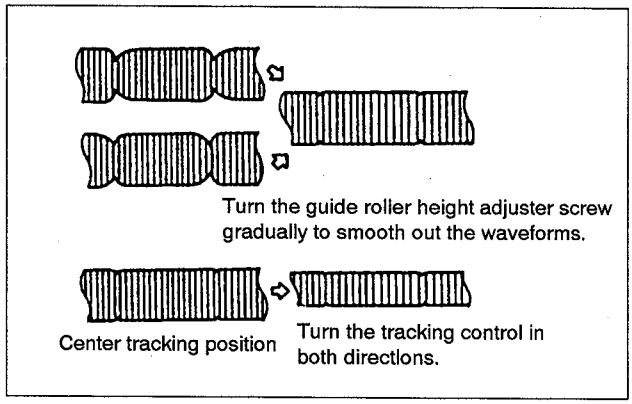

Fig. 4-3

4-1-4. ACE HEAD ASSEMBLY ADJUSTMENT (ROUGH ADJUSTMENT) (Figs. 4-4 and 4-5)

Purpose: Allows the tape to make even contact with the head for recording and playback of the specified track.

Mode	Playback
Tool	Blank tape
Adjustment locations	Height adjuster nut, Tilt adjuster screw

[Adjustment Method]

1) Mount the ACE head assembly. At this time, adjust the height so that the height of guide flange No. 7 matches the level of the lower edge of the control head.
2) Remove the adjustment tool and load a new tape, then set the unit for playback.
3) Check that the tape does not curl or rise up noticeably near the ACE head.
4) If the tape curls up or rises noticeably, readjust the tilt adjuster screw, the azimuth adjuster screw and the height adjuster nut.
   (The height of the ACE head should be adjusted so that the lower edge of the tape is approx. 0.1 to 0.15 mm from the control head.)
5) Perform precision adjustment.

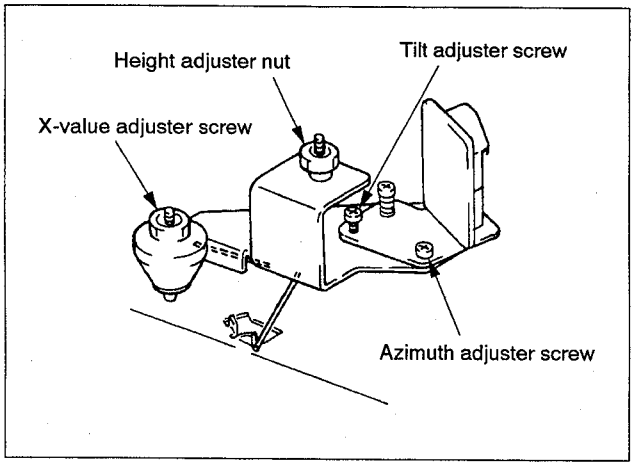

Fig. 4-4

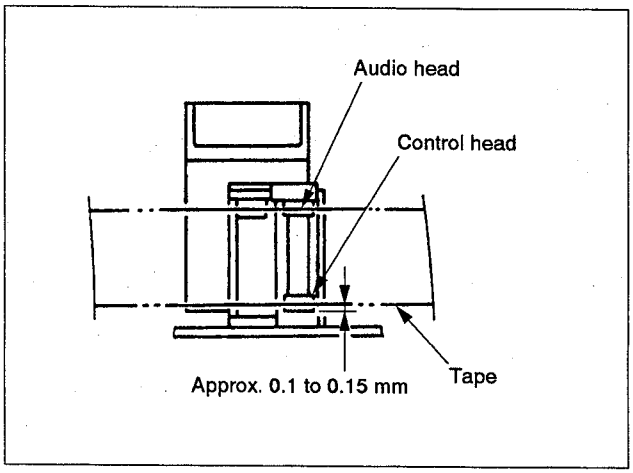

Fig. 4-5

4-1-5. ACE HEAD ASSEMBLY ADJUSTMENT (PRECISION ADJUSTMENT)

Mode	Playback
Signal	Alignment tape (1kHz track)
Measuring instrument	Oscilloscope
Measuring point	Audio output terminal
Adjustment locations	Azimuth adjuster screw, Height adjuster nut, Tilt adjuster screw

[Adjustment Method]

1) Adjust the tilt adjuster screw in the FWD or REV mode so that the lower flange of guide No. 7 does not curl up or rise.
2) Alternately adjust the azimuth adjuster screw, the height adjuster nut, and the tilt adjuster screw to maintain even audio output at maximum with minimum deviation.

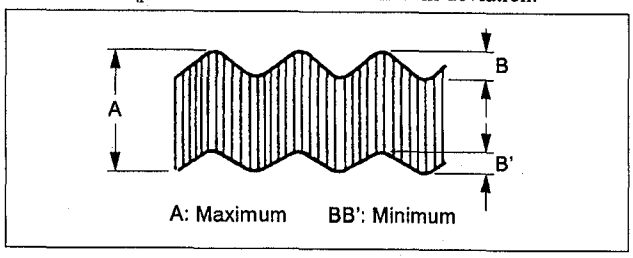

Fig. 4-6

4-1-6. X-VALUE ADJUSTMENT

Purpose: To obtain compatibility with other VTR

Precaution: Be sure to perform the preset tracking adjustment before perform this adjustment. (Refer to the Service Guide.)
Turn off the auto tracking and set the VTR for manual tracking mode.

Mode	Playback
Signal	Alignment tape
Measuring instrument	Oscilloscope
Measuring point	CH-1: Connector PB RF pin for RF PC board check. CH-2: Connector RF SW P pin for RF PC board check.
Adjustment locations	X-value adjuster screw

[Adjustment Method]

- **Adjustment by Hi-Fi alignment tape (NTSC only)**
  When the tracking is set at the center position (by pressing the ▽ and △ keys simultaneously), adjust the RF output to maximum.

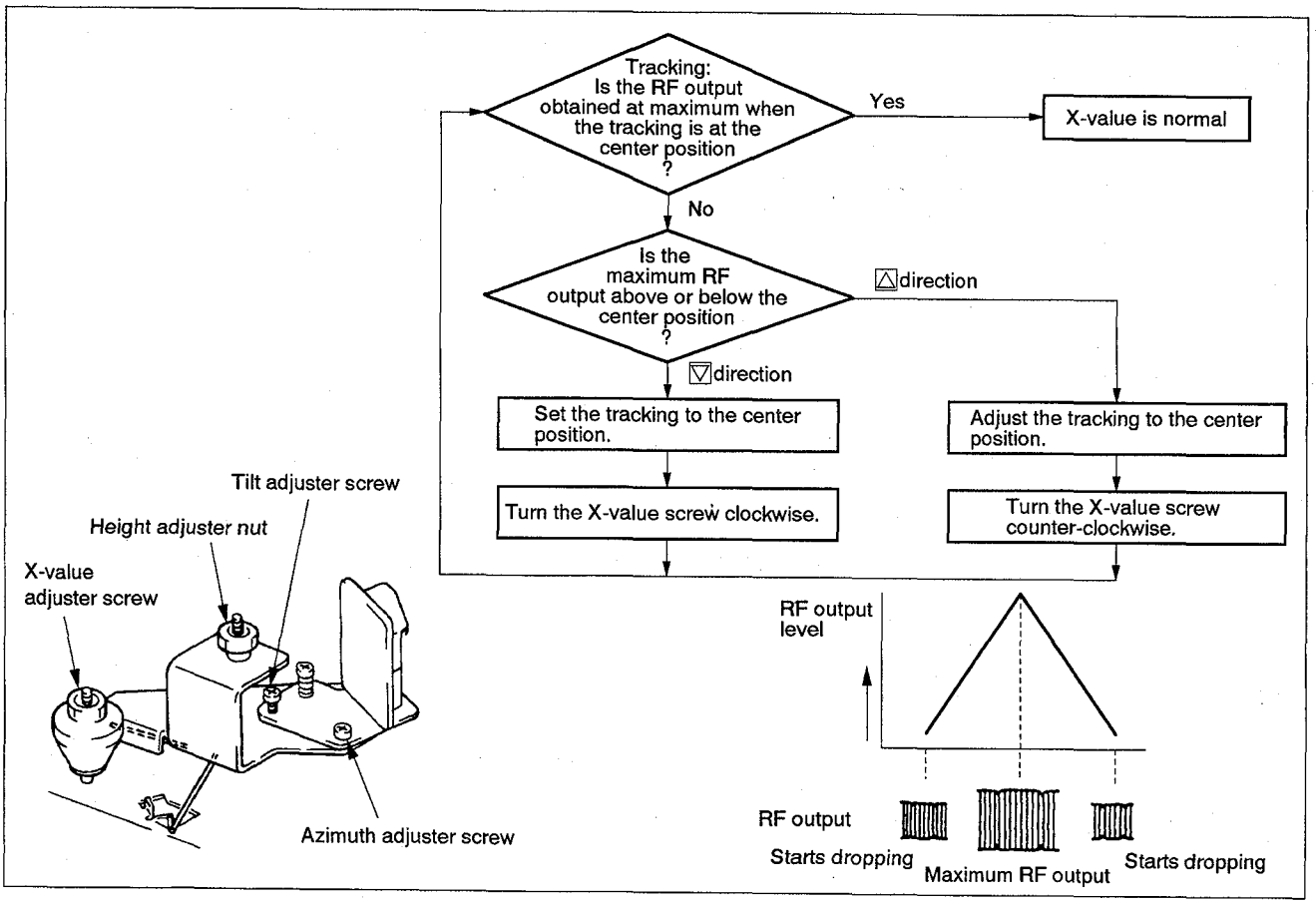

Fig. 4-7

- **Adjustment by alignment tape**

  Adjust the X-value adjuster screw so that maximum RF output is obtained and also that the RF output drops to the same position on pressing the respective ▽ and △ buttons while the tracking is set at the center position.

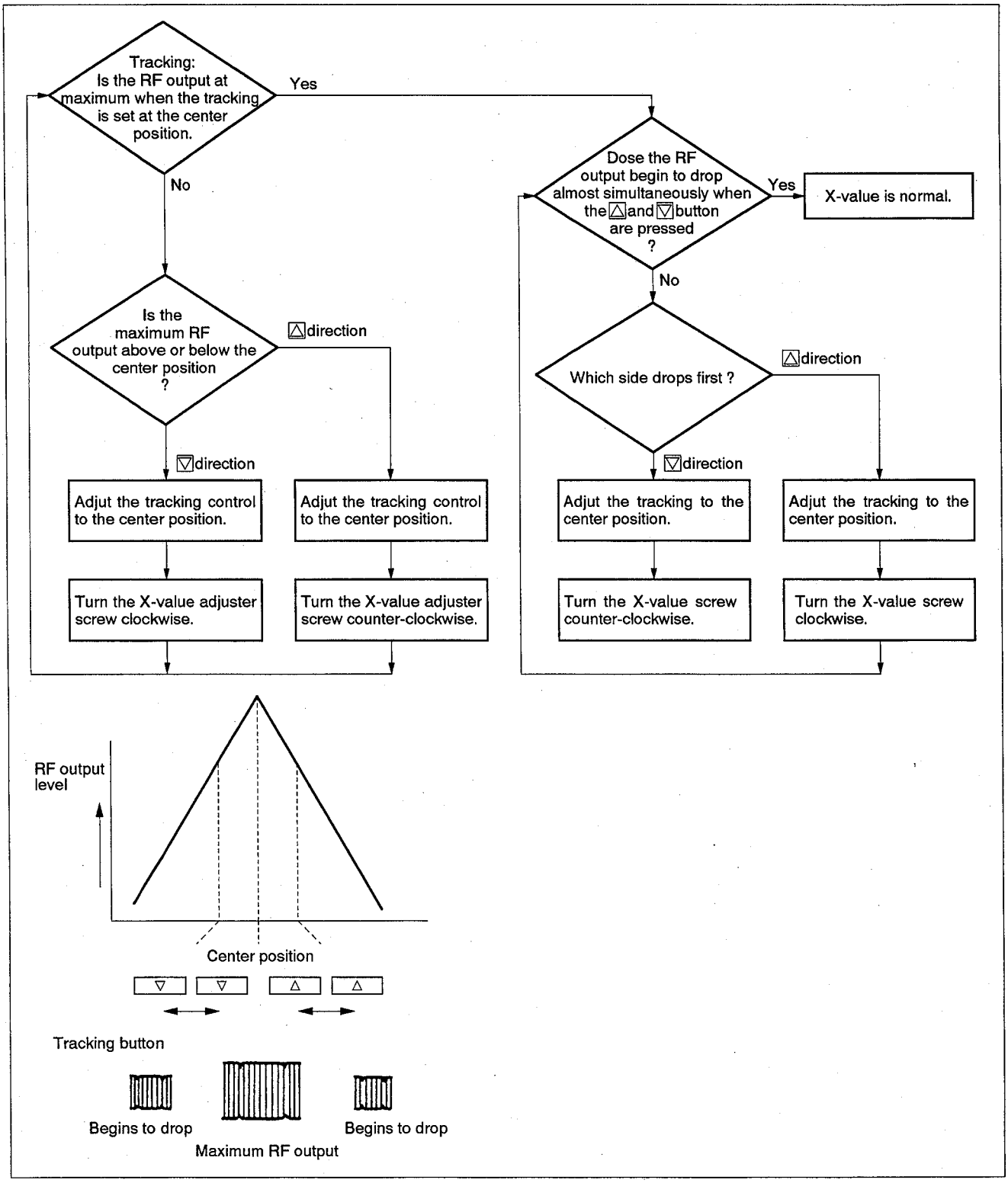

Fig. 4-8

4-1-7. ADJUSTMENTS AFTER REPLACING THE DRUM (VIDEO HEAD)

Purpose: Co-relative height, X-value and other factors of the drum will deviate from those of the guide roller. If the drum is replaced properly, these deviations are extremely small.

Precaution: Turn off the auto tracking and set the manual tracking mode.

Mode	Playback
Signal	Alignment tape, blank tape
Measuring instrument	Oscilloscope
Measuring point	CH-1: Connector PB RF pin for RF PC board check. CH-2: Connector RF SW P pin for RF PC board check.
Adjustment locations	Guide roller (refer to 4-1-2, 4-1-3.) Switching position, Tracking preset, SP delay mono-multi (Refer to the Service Manual), X-value. (refer to 4-1-6.)

[Adjustment Method]

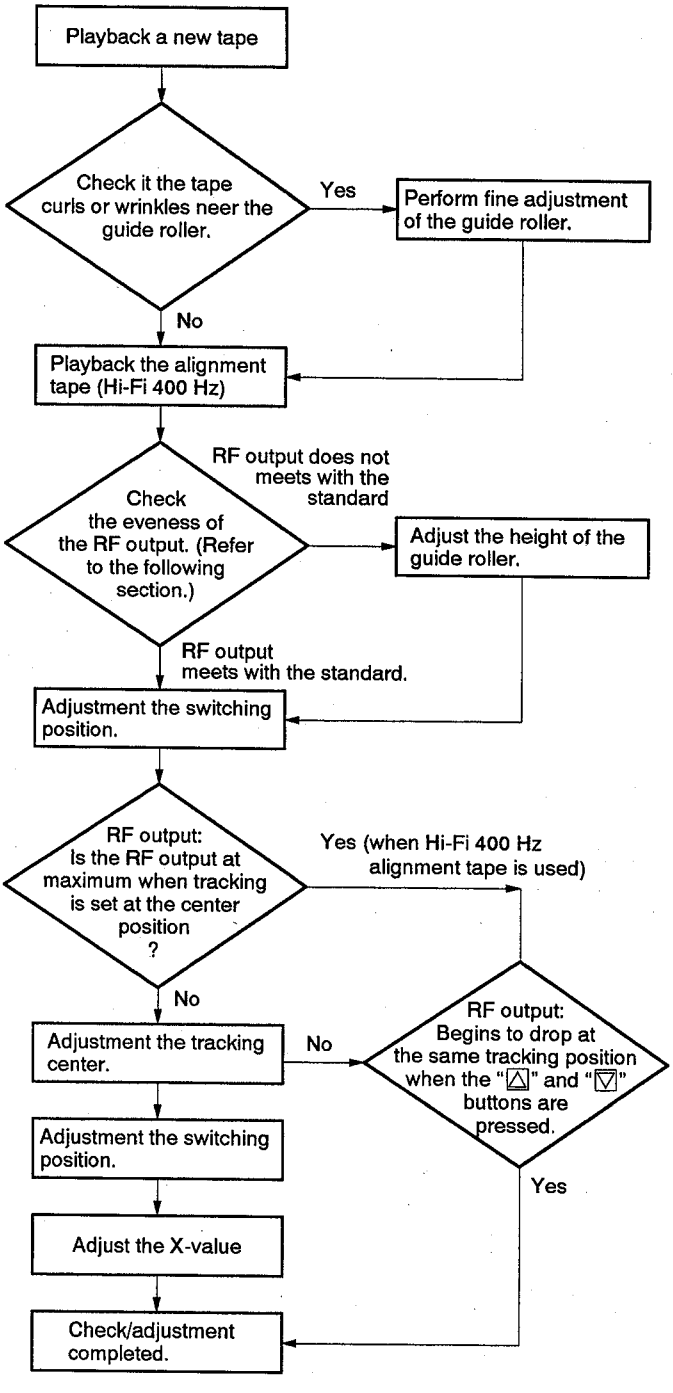

[Checking the evenness and fluctuation of the RF output]

1) Set the RF output to the maximum level using the tracking buttons.

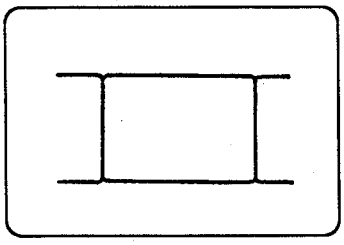

2) Perform fine adjustment of the voltage level range of the oscilloscope, then adjust the RF output deviation to within 4 gradations.

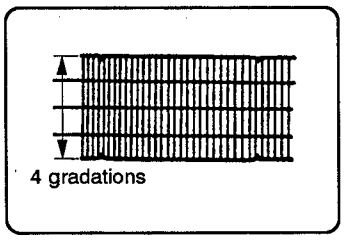

3) Press the tracking buttons and adjust the maximum amplitude of the RF output to within 3 gradations.
4) At this time, check if the minimum amplitude is more than 2 gradations.

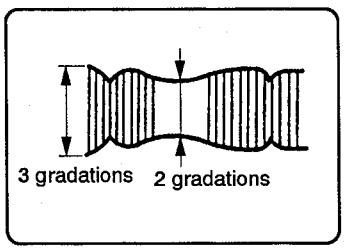

5) Check that the RF output fluctuation between minimum and maximum levels is within 13%.

4-1-8. CHECKING THE TENSION AND TORQUE

Purpose: To check that the tension, torque and compression force of the tape take-up section and mobile sections to ensure smooth tape run and achieve standard VTR performance.

If the tape transport is not smooth or problems occur in relation to the tape transport speed, perform the following check.

Mode	Each operation mode without loading a cassette tape. (Refer to section 1-3.)
Measuring instrument	Torque gauge, Torque gauge adaptor

Item	VTR operation mode	Reel to be measured	Measurement value
Main brake torque	Stop	Supply and take-up reels	170 g•cm or more
Review torque	Review	Supply reel	180 ± 30 g•cm (using the torque cassette)
Take-up torque	Playback	Take-up reel	95 ± 25 g•cm (using the torque cassette)
Back tension torque	Playback	Take-up reel	33 to 44 g•cm (using the torque cassette)

[Check Method]

Measure the torque using the torque gauge and torque gauge adaptor with the torque gauge fixed.

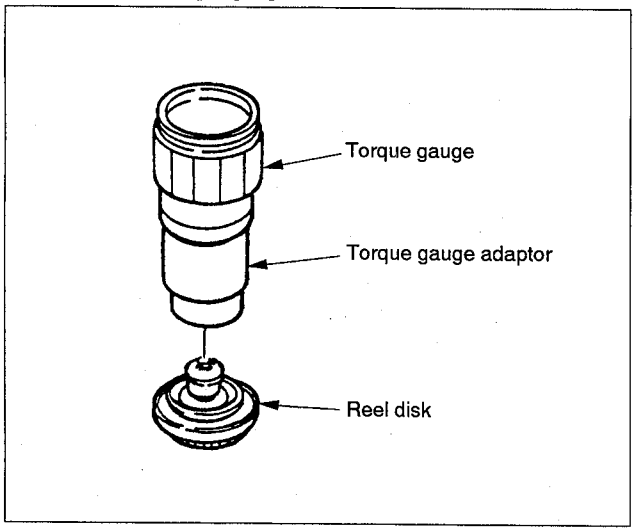

Fig. 4-9

VHS MECHANICAL ADJUSTMENT MANUAL IV

SONY
SERVICE MANUAL

H MECHANISM

SUPPLEMENT-1

1. How to Use the Mode Selector II for Adjusting H Type Mechanism Assembly.
2. Adjusting Mechanism Using New Alignment Tape (KRV-52NE For NTSC).

File this supplement with the VHS mechanical adjustment IV.

TABLE OF CONTENTS

Section	Title	Page
1.	HOW TO USE THE MODE SELECTOR II FOR ADJUSTING H TYPE MECHANISM ASSEMBLY	2
1-1.	Outline	2
1-2.	Preparation	2
1-3.	Connection	2
1-4.	Operation	2
1-5.	Precautions	2
2.	ADJUSTING THE MECHANISM USING NEW ALIGNMENT TAPE (KRV-52NE for NTSC)	4
2-1.	Adjustment Using Alignment Tape (KRV-52NE for NTSC having no version No.)	4
2-1-1.	X-Value Adjustment (Using the tape having no version No.)	4
2-2.	Adjustment Using Alignment Tape (KRV-52NE for NTSC having the version No.)	6
2-2-1.	X-Value Adjustment (Using the tape having the version No.)	6
2-3.	Adjusting the Mechanism Using Alignment Tape (KRV-52NE for NTSC)	10
2-3-1.	Height Adjustment of Guide Rollers No. 3 and No. 6	10
2-3-2.	ACE Head Assembly Adjustment (Rough Adjustment)	11
2-3-3.	ACE Head Assembly Adjustment (Precision Adjustment)	11
2-3-4.	Adjustments After Replacing the Drum (Video Head)	12

MICROFILM

1. HOW TO USE THE MODE SELECTOR II FOR ADJUSTING H TYPE MECHANISM ASSEMBLY

1-1. OUTLINE

To activate the VHS system H type mechanism assembly using mode selector II (J-6082-282-A), use connector conversion jig (J-6090-052-A). By using the connector conversion jig, the following operations are possible.

- Loading and unloading action by the loading motor
- Reading of the current setting of the mode switch
- Normal and reverse rotation of the capstan motor

1-2. PREPARATION

1-2-1. ADDITION OF POWER SUPPLY CABLE (Already added Mode Selector II also available)

In order to drive the capstan motor, the power +5 V and +12 V are supplied from the Mode Selector II. Disassemble the D-SUB connector of the Mode Selector cable, then solder the following three places.

Supplied 3-pin cable	DSUB connector of the mode selector II	Voltage
Pin 1 (Red index)	Pin 20	+12 V
Pin 2	Pin 25	GND
Pin 3	Pin 24	+5 V

- Connector pin number assignment of the DSUB connector (From the soldering side)

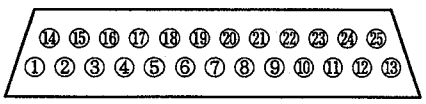

- When connections are made, check that +5 V and +12 V are available at the 3-pin cable connector.

1-2-2. CHECKING THE SOFTWARE VERSION

Turn on the power of the mode selector II.
If the reading for the software version on the mode selector II is not 1.10 or higher, replace the New ROM (J-6082-314-A).

1-3. CONNECTION

1-3-1. CONNECTION BETWEEN THE CONNECTOR CONVERSION JIG AND THE MODE SELECTOR II (See Fig. 1-1)

Insert the connectors of the two 6-pin cables (one is white and the other is black) and the 3-pin cable from the mode selector II to the corresponding connectors on the connector conversion jig (J-6090-052-A).

1-3-2. CONNECTION BETWEEN THE CONNECTOR CONVERSION JIG AND THE H TYPE MECHANISM ASSEMBLY

With the power of the mode selector II turned off, insert the following three connectors to the corresponding connectors on the H type mechanism assembly.

- 3-pin connector for the loading motor
- 5-pin connector for the mode switch
- 8-pin connector for the capstan motor

Set the speed control for the minimum setting (fully counter-clockwise).

1-4. OPERATION

1-4-1. OPERATION OF THE LOADING MOTOR ON THE H TYPE MECHANISM ASSEMBLY

(1) Select the H type mechanism assembly setting on the mode selector II .
(2) After this, procedures are the same as those for the previous model types.
For the operating method, see pages 3 to 5 of "8 mm Video Mechanism Manual VI (TK Mechanism) Supplement-1".
For the loading method, see page 3 of "VHS Mechanical Adjustment Manual IV (H Mechanism)".

1-4-2. OPERATION OF THE CAPSTAN MOTOR ON THE H TYPE MECHANISM ASSEMBLY

(1) For the loading motor operation under Section 1-4-1, change the mode setting to the FF/REW mode with the mode switch.
(2) Turn the speed control gradually in clockwise direction, and the capstan motor starts rotating. To turn the capstan motor in desired rotating direction, change the FWD/RVS setting of the rotating direction switch.

1-5. PRECAUTIONS

- Turn the speed control only when necessary. Otherwise, hold the speed control turned at fully counterclockwise direction. If the power of the mode selector II is turned on with the speed control turned in clockwise direction, +12V power fails and the power of the mode selector II cannot be turned on.
- Although the connector conversion jig (J-6090-052-A) has rubber feet, do not make a short circuit on the bottom surface of the connector conversion jig via foreign conductive materials.

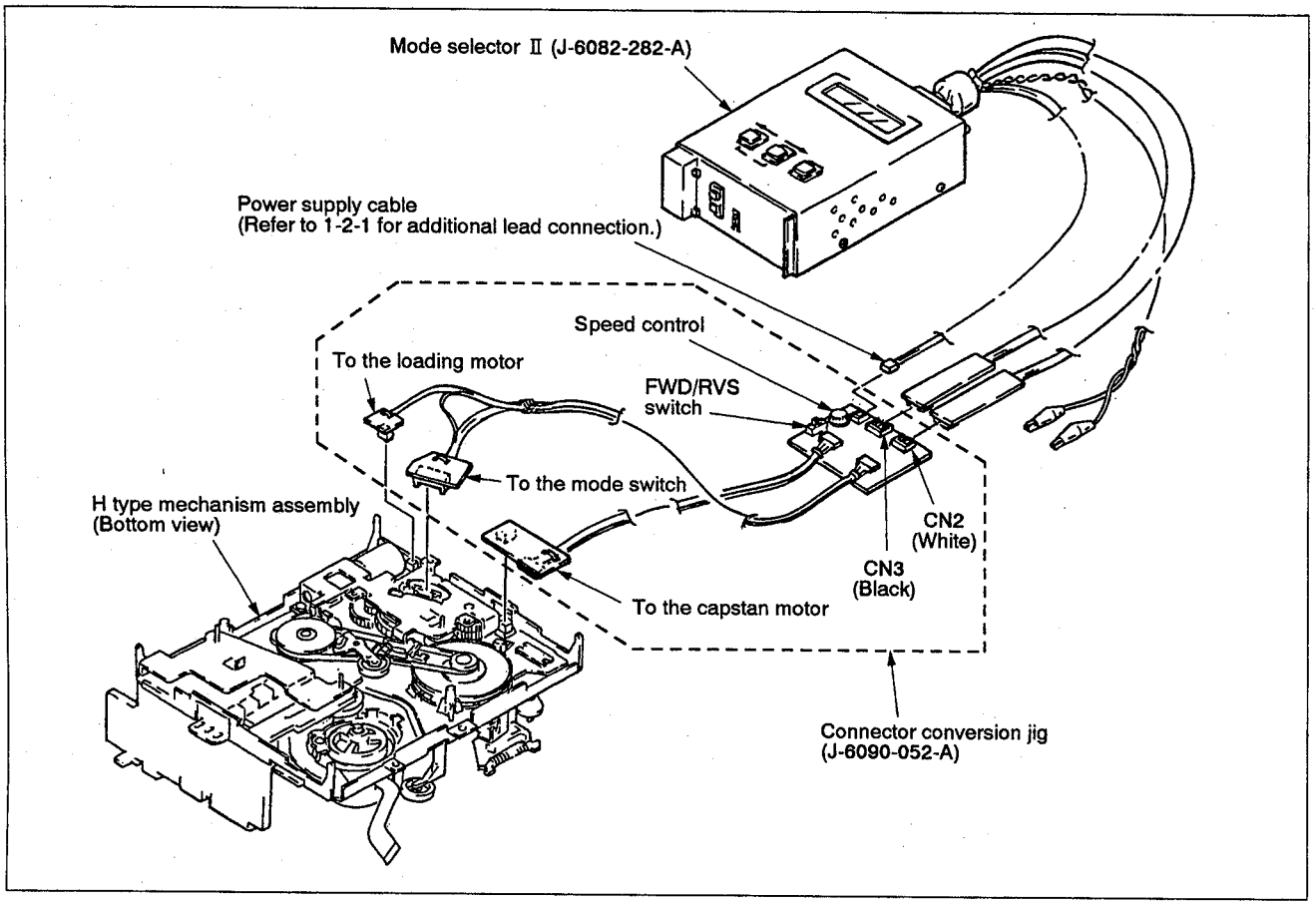
Mode selector II (J-6082-282-A)
Power supply cable
(Refer to 1-2-1 for additional lead connection.)
Speed control
To the loading motor
FWD/RVS
switch
To the mode switch
H type mechanism assembly
(Bottom view)
CN2
(White)
CN3
(Black)
To the capstan motor
Connector conversion jig
(J-6090-052-A)

Fig. 1-1

2. ADJUSTING THE MECHANISM USING NEW ALIGNMENT TAPE (KRV-52NE for NTSC)

The conventional alignment tape (For NTSC) is now replaced with alignment tape KRV-52NE, and the following describes how to align the mechanism using the KRV-52NE. For details on the use of KRV-51N2 for each model, refer to the service manuals which will be issued in the future.

Name	Parts No.	Remarks
Alignment tape KRV-52NE for NTSC	8-192-605-41	For tape path, audio azimuth, and X-value adjustments
Alignment tape KRV-51N2 for NTSC	8-192-605-32	For electrical adjustments (RF, AF, and switching position) and operation check

Note: The KRV-52NE has or does not have Ver No. depending on new or old type as shown below. (New one has Ver No.)
Note that an adjusting method of X-value is different.

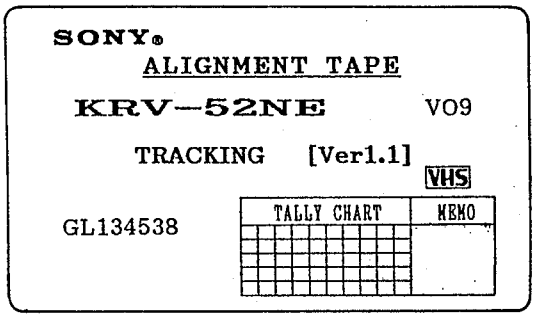

Contents:
KRV-52NE (NTSC)

Time	Video	Audio
20 min.	Recording only at 1 MHz, A-ch. EP mode RF skipping once per 5 frames	5 kHz full tracks

KRV-51N2 (NTSC)

Class	Mode	Time	Video	Audio (HIFI/Normal)
1	SP	7 min.	Color bar	400 Hz
2	SP	3 min.	Mono. scope	400 Hz
3	EP	7 min.	Color bar	400 Hz
4	EP	3 min.	Mono. scope	400 Hz

2-1. ADJUSTMENT USING ALIGNMENT TAPE (KRV-52NE for NTSC having no version No.)

2-1-1. X-VALUE ADJUSTMENT (Using the tape having no version No.)

Purpose: To obtain compatibility with other VCRs.

Precaution: Before starting to adjust X-value, set the tracking control at the center position. To set the tracking control at the center position for the VCRs equipped with the ▲ and ▼ tracking control keys, press both the ▲ and ▼ tracking control keys at the same time. For the VCRs not equipped with the tracking control keys, deactivate the automatic tracking control by pressing the tracking AUTO/MANUAL key on the remote control unit during threading operation (after a tape is inserted but before the VCR starts playing back the tape).

Mode	Playback
Signal	Alignment tape KRV-52NE (For NTSC having no version No.)
Measuring instrument	Oscilloscope TIM/DIV: 2ms Trigger source: CH2 Trigger slope: +
Measuring point	CH-1: Connector PB RF pin for RF PC board check CH-2: Connector RF SWP pin for RF PC board check
Adjustment locations	X-value adjuster screw

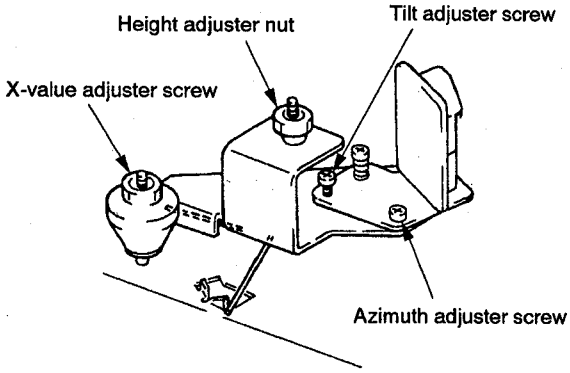

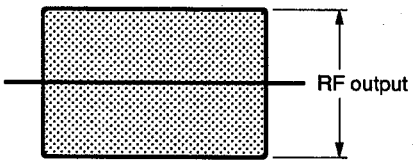

RF output shall be maximum at the center position of the tracking control.

[Adjustment Method]
Set the tracking control at the center position. For the VCRs equipped with narrow gap video heads, set the X-value adjustment screw where a maximum RF output is obtained. For the VCRs equipped with wide gap video heads, set the X-value adjustment screw both where a maximum RF output is obtained and where the RF output decreases immediately when the ▼ tracking control key is pressed.

X-VALUE ADJUSTMENT (Using the tape having no version No.)

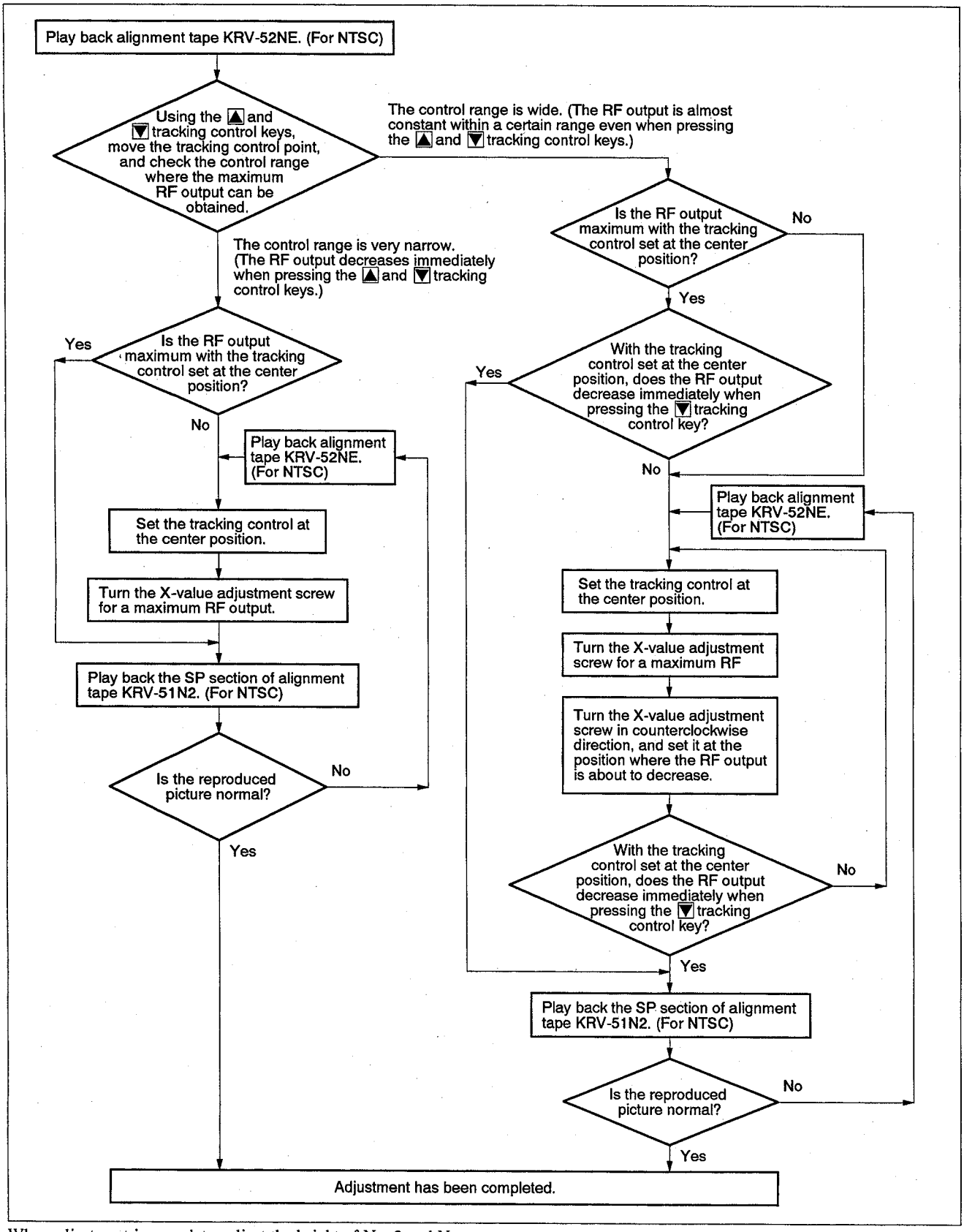

When adjustment is complete, adjust the height of No. 3 and No. 6 guide rollers on page 10.

2-2. ADJUSTMENT USING ALIGNMENT TAPE (KRV-52NE for NTSC having the version No.)

2-2-1. X-VALUE ADJUSTMENT (Using the tape having the version No.)

Purpose: To obtain compatibility with other VCRs.

Precaution: Before starting to adjust X-value, set the tracking control at the center position. To set the tracking control at the center position for the VCRs equipped with the ▲ and ▼ tracking control keys, press both the ▲ and ▼ tracking control keys at the same time. For the VCRs not equipped with the tracking control keys, deactivate the automatic tracking control by pressing the tracking AUTO/MANUAL key on the remote control unit during threading operation (after a tape is inserted but before the VCR starts playing back the tape).

Mode	Playback
Signal	Alignment tape KRV-52NE (For NTSC having the version No.)
Measuring instrument	Oscilloscope TIM/DIV: 2ms Trigger source: CH2 Trigger slope: +
Measuring point	CH-1: Connector PB RF pin for RF PC board check CH-2: Connector RF SWP pin for RF PC board check
Adjustment locations	X-value adjuster screw

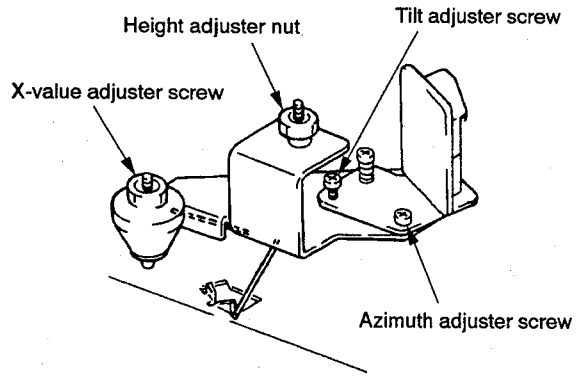

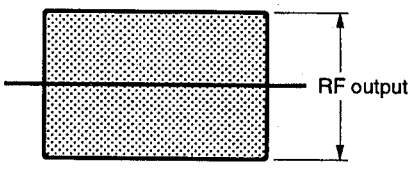

RF output shall be maximum at the center position of the tracking control.

[Adjustment Method]

Set the tracking control at the center position. For the VCRs equipped with narrow gap video heads, set the X-value adjustment screw where a maximum RF output is obtained. For the VCRs equipped with wide gap video heads, set the X-value adjustment screw both where a maximum RF output is obtained and where the RF output decreases immediately when the ▼ tracking control key is pressed.

1. Adjusting X-value (Using the tape having the version No.)

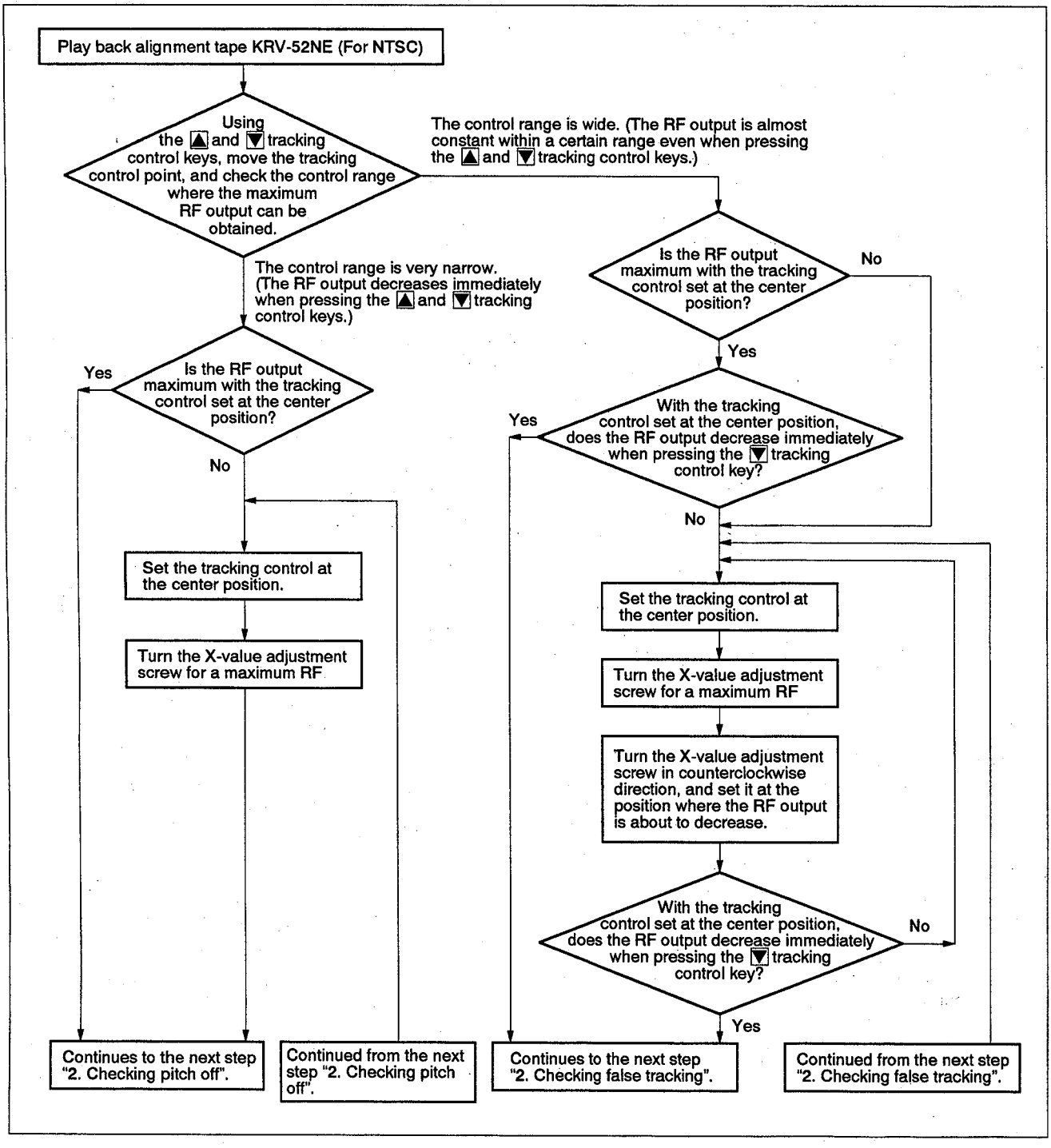

2. Checking false tracking (Using the tape having the version No.)

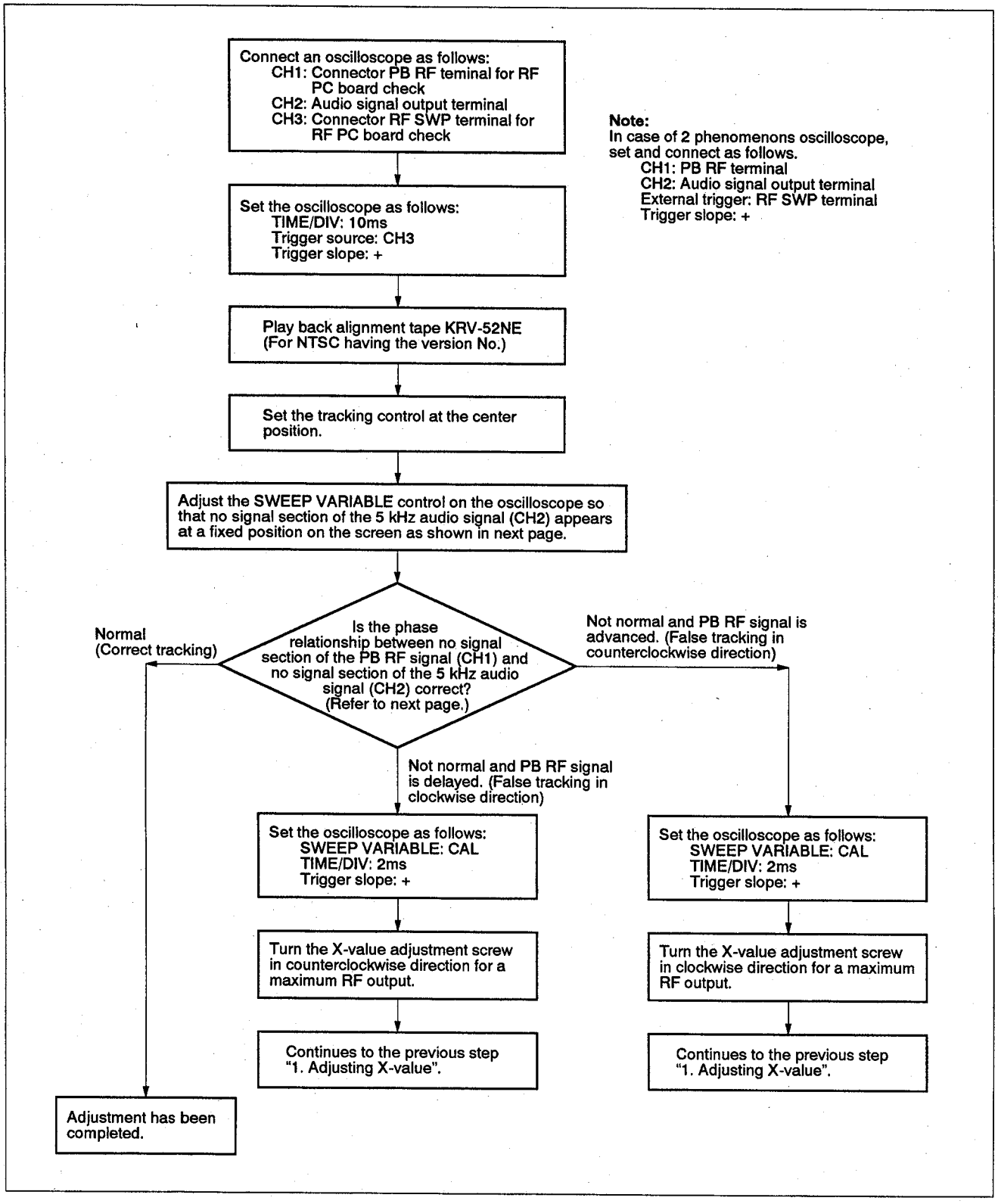

Using the tape having the version No.

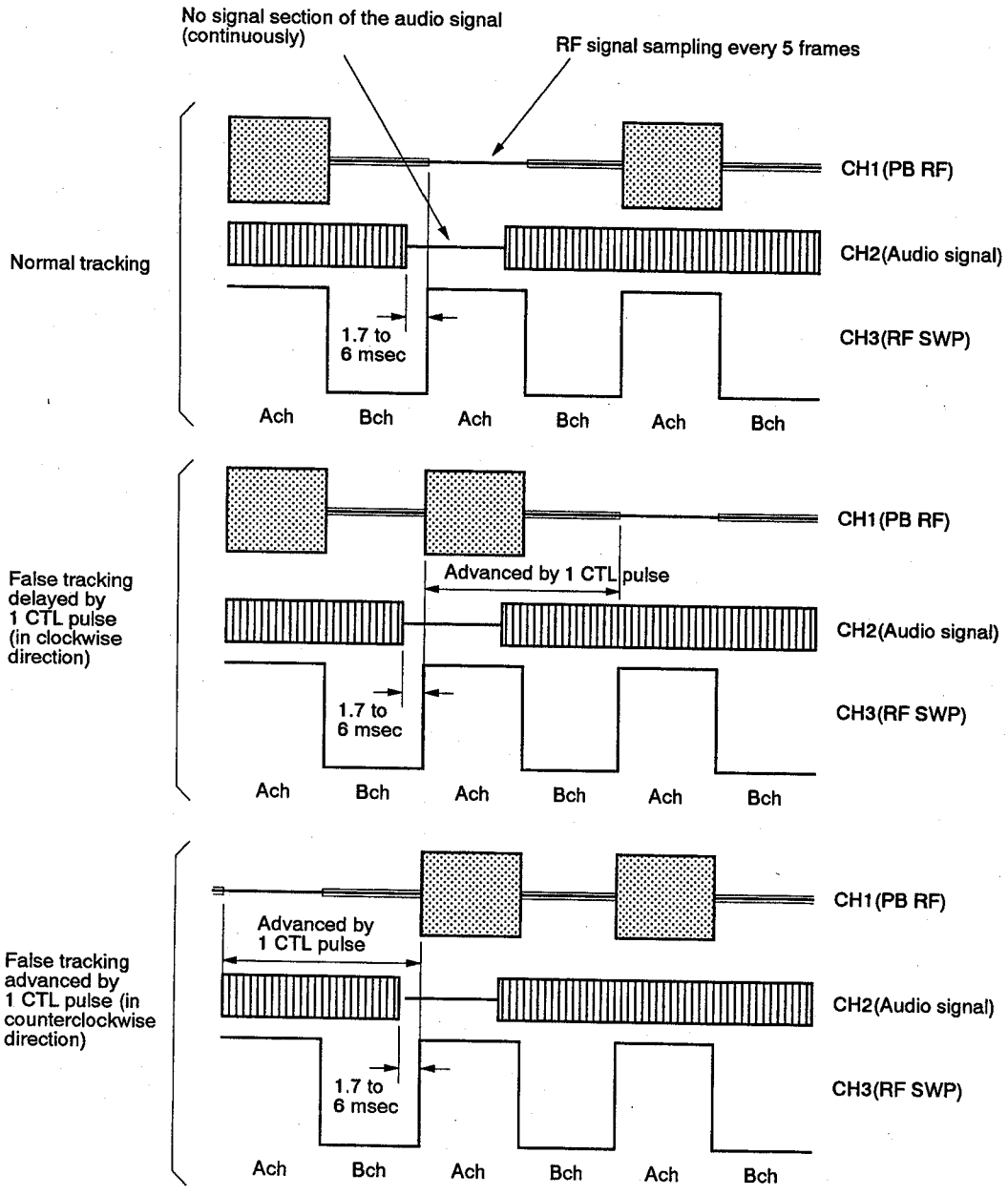

2-3. ADJUSTING THE MECHANISM USING ALIGNMENT TAPE (KRV-52NE for NTSC)

2-3-1. HEIGHT ADJUSTMENT OF GUIDE ROLLERS NO. 3 AND NO. 6

Mode	Playback
Signal	Alignment tape KRV-52NE (For NTSC)
Measuring instrument	Oscilloscope TIM/DIV: 2ms Trigger source: CH2 Trigger slope: +
Measuring point	CH-1: Connector PB RF pin for RF PC board check CH-2: Connector RF SWP pin for RF PC board check
Adjustment locations	Height adjustment screw for No.3 tape guide roller Height adjustment screw for No.6 tape guide roller

[Adjustment Method]

The following adjustment shall be carried out after completed Section 2-1-1 "X-value adjustment and check".

1) Deactivate the automatic tracking control, and set the tracking control at the center position. To set the tracking control at the center position for the VCRs equipped with the ▲ and ▼ tracking control keys, press both the ▲ and ▼ tracking control keys at the same time. For the VCRs not equipped with the tracking control keys, deactivate the automatic tracking control by pressing the tracking AUTO/MANUAL key on the remote control unit during threading operation (after a tape is inserted but before the VCR starts playing back the tape).
2) Check if the RF output changes in amplitude by pressing the tracking control key. The RF output should change periodically (changes from a minimum amplitude to a maximum amplitude, and to the minimum amplitude again).

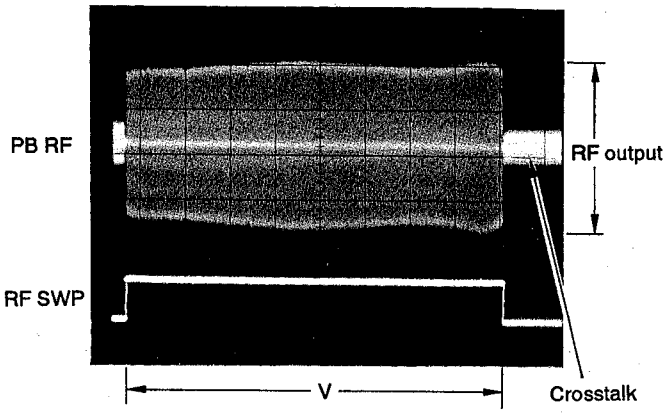

3) Turn the height adjustment screws of tape guide rollers No.3 and No.6 so that the RF output envelope becomes as flat as possible.
4) Press the ▲ tracking control key, and check that both the beginning and end of the RF output change together the same in amplitude.
5) Press the ▼ tracking control key, and check that both the beginning and end of the RF output change together the same in amplitude.

Turn the height adjustment screws of tape guide rollers No.3 and No.6 little by little so that the RF output envelope becomes as flat as possible.

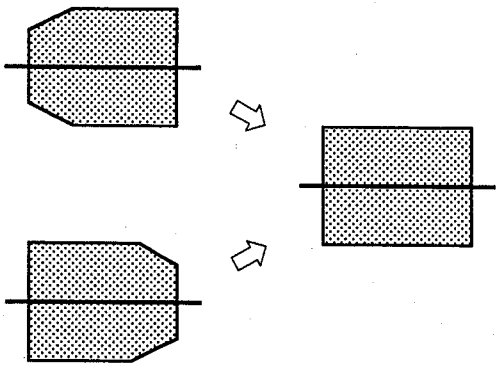

Press the ▼ tracking control key, then the ▼ tracking control key, and check that both the beginning and end of the RF output change together the same in amplitude.

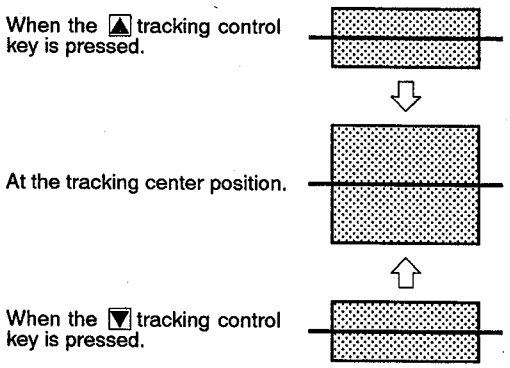

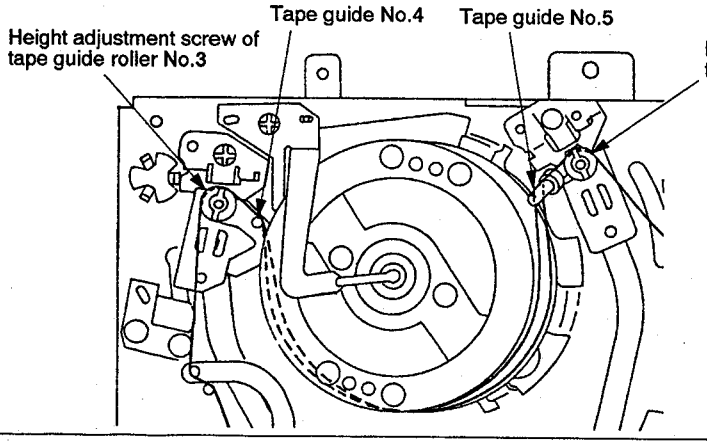

2-3-2. ACE HEAD ASSEMBLY ADJUSTMENT (ROUGH ADJUSTMENT) (Figs. 2-1 and 2-2)

Purpose: Allows the tape to make even contact with the head for recording and playback of the specified track.

Mode	Playback
Jig	Blank tape
Adjustment locations	Height adjuster nut, Tilt adjuster screw

[Adjustment Method]

1) Mount the ACE head assembly. At this time, adjust the height so that the height of guide flange No. 7 matches the level of the lower edge of the control head.
2) Remove the adjustment tool and load a new tape, then set the unit for playback.
3) Check that the tape does not curl or rise up noticeably near the ACE head.
4) If the tape curls up or rises noticeably, readjust the tilt adjuster screw and the height adjuster nut.
   (The height of the ACE head should be adjusted so that the lower edge of the tape is approx. 0.1 to 0.15 mm from the control head.)
5) Perform precision adjustment.

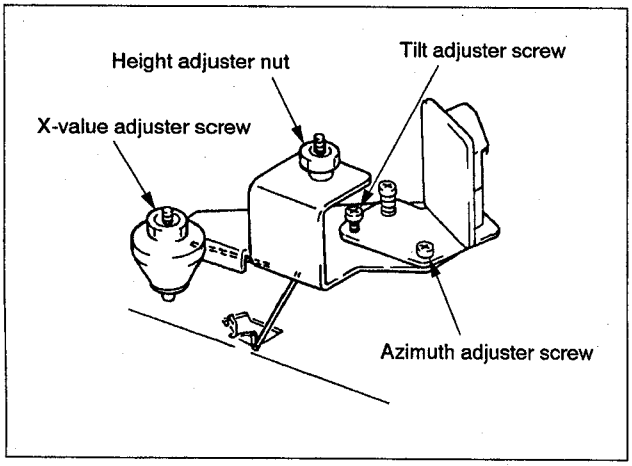

Fig. 2-1

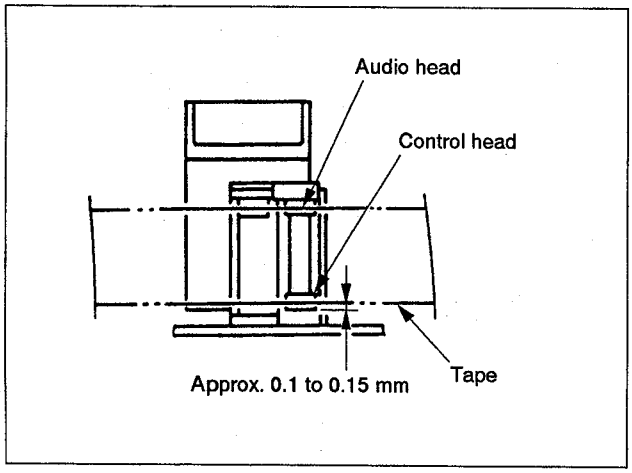

Fig. 2-2

2-3-3. ACE HEAD ASSEMBLY ADJUSTMENT (PRECISION ADJUSTMENT)

Mode	Playback
Signal	Alignment tape (KRV-52NE 5 kHz) (For NTSC)
Measuring instrument	Oscilloscope
Measuring point	Audio output terminal
Adjustment locations	Azimuth adjuster screw, Height adjuster nut, Tilt adjuster screw

[Adjustment Method]

1) Adjust the tilt adjuster screw in the FWD or REV mode so that the lower flange of guide No. 7 does not curl up or rise.
2) Alternately adjust the azimuth adjuster screw, the height adjuster nut, and the tilt adjuster screw to maintain even audio output at maximum with minimum deviation.

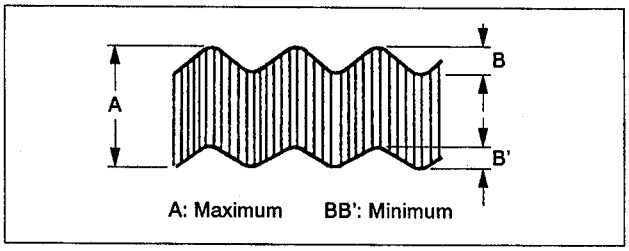

Fig. 2-3

2-3-4. ADJUSTMENTS AFTER REPLACING THE DRUM (VIDEO HEAD)

Purpose: Co-relative height, X-value and other factors of the drum will deviate from those of the guide roller. If the drum is replaced properly, these deviations are extremely small.

Note 1: Deactivate the automatic tracking control for setting the mechanism in manual tracking control mode.

Note 2: To set the tracking control at the center position, deactivate the automatic tracking control by pressing the tracking [AUTO/MANUAL] key on the remote control unit during threading operation (after a tape is inserted but before the VCR starts playing back the tape).

Mode	Playback
Signal	Alignment tape KRV-52NE (For NTSC), blank tape
Measuring instrument	Oscilloscope
Measuring point	CH-1: Connector PB RF pin for RF PC board check. CH-2: Connector RF SWP pin for RF PC board check.
Adjustment locations	Guide roller (Refer to 2-3-1.) Switching position (Refer to the Service Manual) X-value (Refer to 2-1-1, 2-1-2.)

[Adjustment Method]

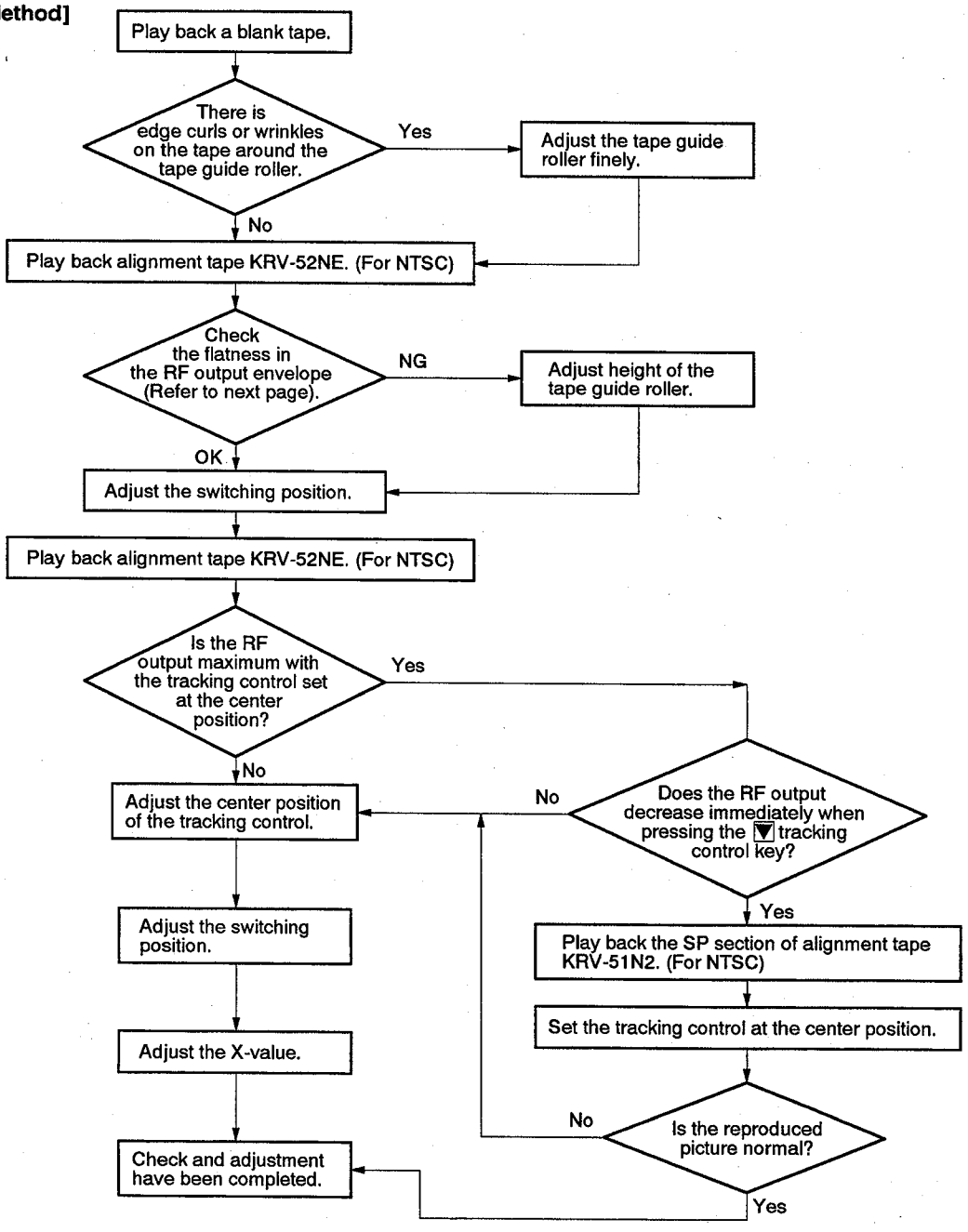

[Checking the evenness and fluctuation of the RF output]

1) Set the RF output to the maximum level using the tracking buttons.

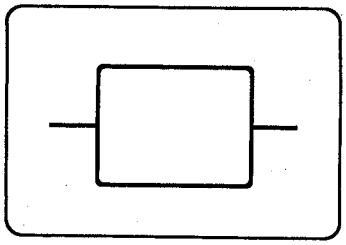

2) Perform fine adjustment of the voltage level range of the oscilloscope, then adjust the RF output deviation to within 4 gradations.

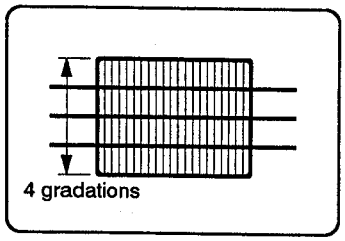

3) Press the tracking buttons and adjust the maximum amplitude of the RF output to within 3 gradations.
4) At this time, check if the minimum amplitude is more than 2 gradations.

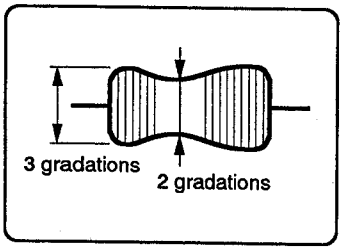

5) Check that the RF output fluctuation between minimum and maximum levels is within 13%.

Sony Corporation
Consumer A&V Products Company
Home A&V Products Div.

9-973-623-82

Published by Personal A&V Products Div.
Quality Engineering Dept.

VHS MECHANICAL ADJUSTMENT MANUAL IV

SONY
SERVICE MANUAL

H MECHANISM

SUPPLEMENT-2

File this supplement with the VHS mechanical adjustment IV and supplement-1.

TABLE OF CONTENTS

Section	Title	Page
1.	CORRECTION	1
1-1.	Adjustment Sequence	1
2.	MODIFICATION	2
2-1.	Changing the Recorded Contents of Alignment Tape	2
2-2.	TG2 Roller, FE Head Assembly	2
2-3.	TG3, TG6 Guide Roller Assembly	3
2-4.	TG8 Assembly	4
2-5.	Tension Regulator (TG1) Position Tension Adjustment	5
2-6.	TG8 Guide Roller Height Adjustment	6

1. CORRECTION

In the VHS Mechanism Adjustment Manual IV (Supplement-1), an adjustment sequence was wrong, and it is corrected as follow;

1-1. Adjustment Sequence (VHS Mechanism Adjustment Manual IV (Supplement-1) Page 6 to 11)

(1) Adjustment of No. 3 and No. 6 guide roller height
Delete the "The following adjustment shall be carried out after completed Section 2-1-1 "X-value adjustment and check" under "Adjustment Method" on page 10.

(2) Adjustment of ACE head assembly

Note: In the adjustment of ACE head assembly (coarse adjustment and fine adjustment), if a azimuth, height and tilt were adjusted, again adjust the height of No. 3 and No. 6 guide rollers.

(3) Adjustment of X value

MICROFILM

2. MODIFICATION

2-1. CHANGING THE RECORDED CONTENTS OF ALIGNMENT TAPE

KRV-52NE (NTSC) (Ver. 1.2)

Time	Video	Audio
20 min.	Recording only at 1 MHz, A-ch. EP mode RF skipping once per 5 frames	5 kHz → 4 kHz full tracks

2-2. TG2 ROLLER, FE HEAD ASSEMBLY (Refer to VHS Mechanical Adjustment Manual IV page14)

- The TG2 roller is provided with either of two types, fixed or straight. For the fixed type, section 3-5 is added.

3-5. TG2 ROLLER, FE HEAD ASSEMBLY (Fig. 3-5)

1) Remove screw ① to pull out FE head assembly ②.

[Note on Mounting]

- Keep clean the surface contacts tape of TG2 roller.

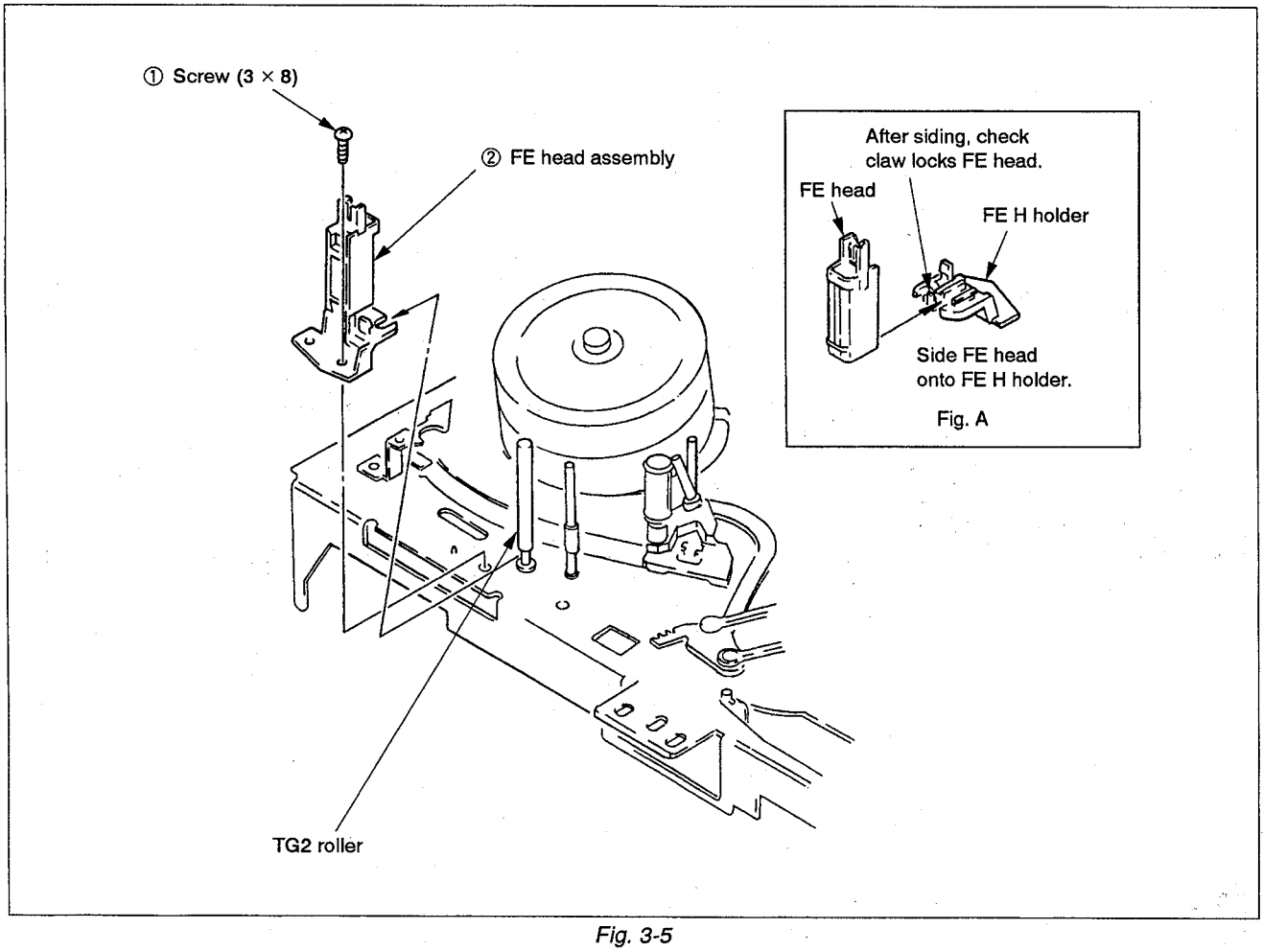

Fig. 3-5

2-3. TG3, TG6 GUIDE ROLLER ASSEMBLIES (Refer to VHS Mechanical Adjustment Manual Ⅳ page 17)

- There is another type in TG3 and TG6 guide roller assemblies, which is not attached with a screw (B2X3). For the screwless type, section 3-8 is added.

3-8. TG3, TG6 GUIDE ROLLER ASSEMBLIES (Fig. 3-8)

1) TG3 guide roller assembly ① by turning it in arrow Ⓐ direction.
2) Removal the spring ②.
3) TG6 guide roller assembly ③ by turning it in arrow Ⓑ direction.
4) Removal the spring ④.

[Note on Mounting]

- Keep clean the surface contacts tape of TG3 and TG6 guide roller assemblies ①, ③.

[Adjustment after Mounting]

- 4-1. Tape path adjustment.

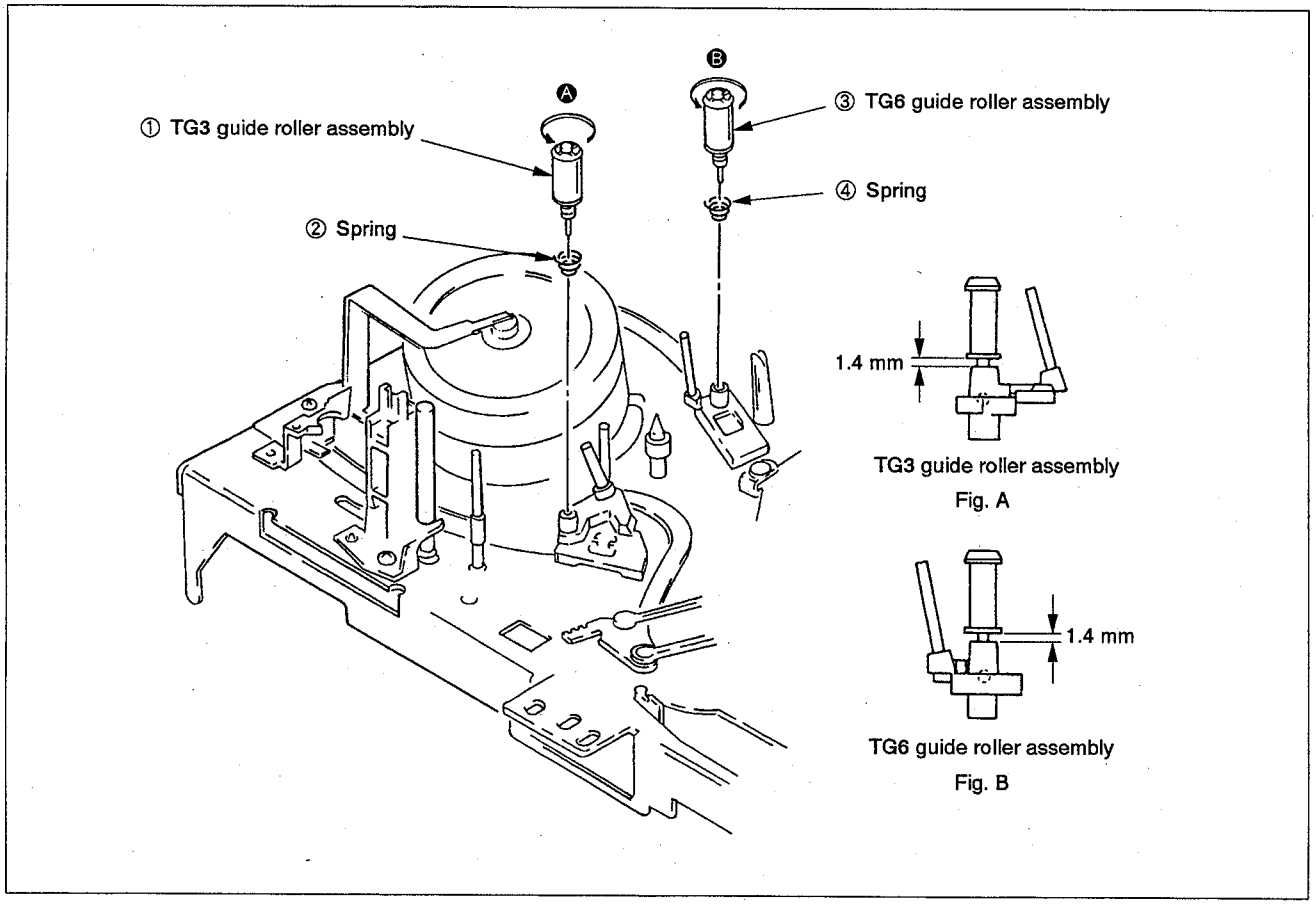

Fig. 3-8

2-4. TG8 ASSEMBLY (Refer to VHS Mechanical Adjustment Manual IV page 23)

- As the shape of TG8 assembly was changed, Section 3-13 is changed.

☛ : Chenged portion

3-13. TG8 ASSEMBLY (Fig. 3-15)

1) Remove TG7 tape retainer ① to pull out TG8 assembly ②.

[Note on Mounting]

- Apply FLOIL SG-055G (Jig Ref. No. J-12) to ☆ marked portion.
- Keep clean the surface contacts tape of TG8 assembly ②.
- Be careful not to change the shape of TG7 tape retainer ①.
- After attaching the TG7 tape retainer ①, check that side Ⓐ of ① is below side Ⓑ of the stepped-part of the TG7 shaft. (Fig. A)

[Adjustment after Mounting]

- 4-1. Tape path adjustment.

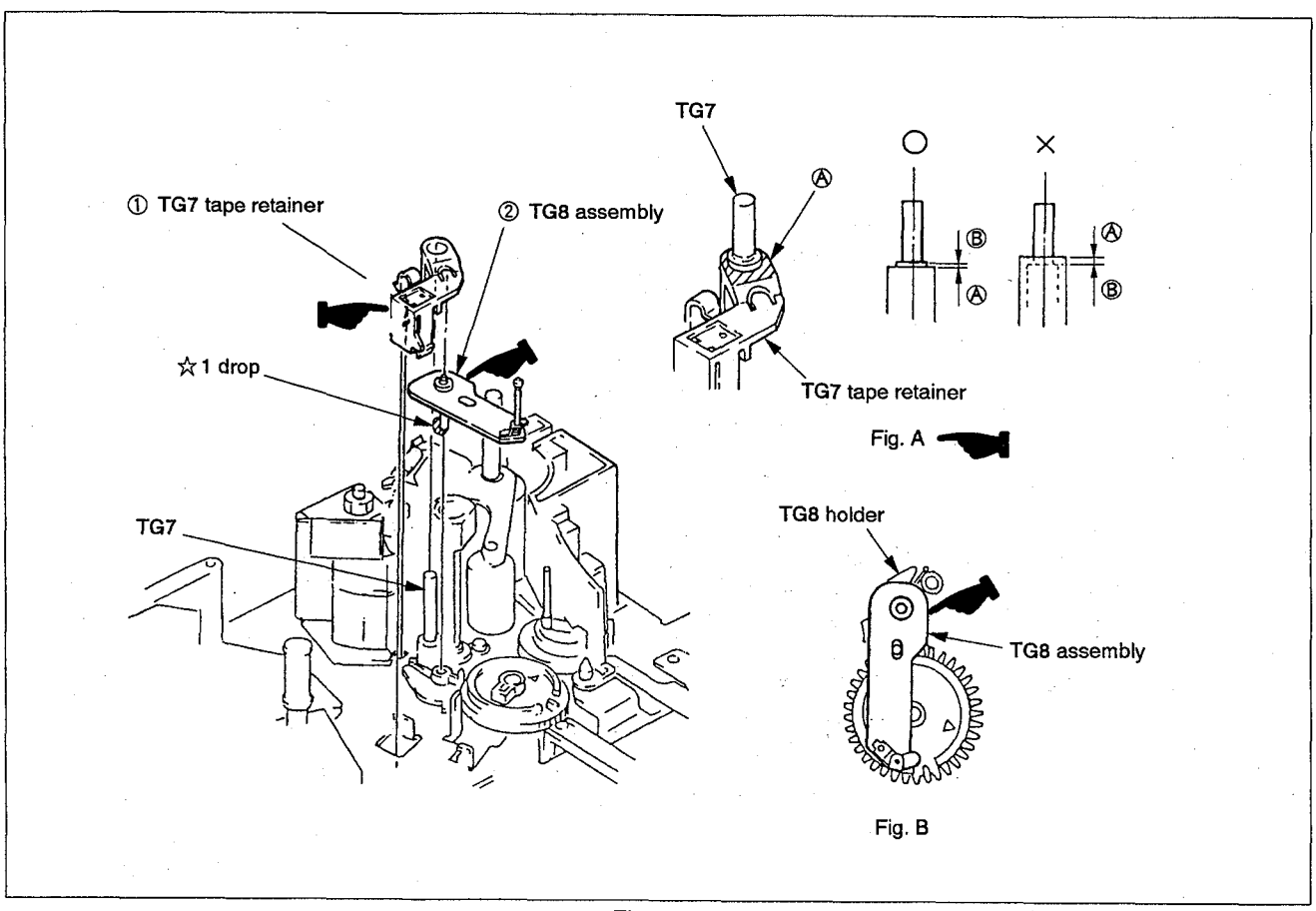

Fig. 3-15

2-5. TENSION REGULATOR (TG1) POSITION/ TENSION ADJUSTMENT (Refer to VHS Mechanical Adjustment Manual Ⅳ page 35)

- As the tension regulator position and tension adjustment were changed, the tension adjustment and Fig. 4-1 are changed.

☛ : Changed portion

• Tension adjustment

Mode	Playback
Measuring instrument/tool	Torque cassette
Adjustment locations	Position for hooking the tension spring
Specified value	34 ± 4 g•cm

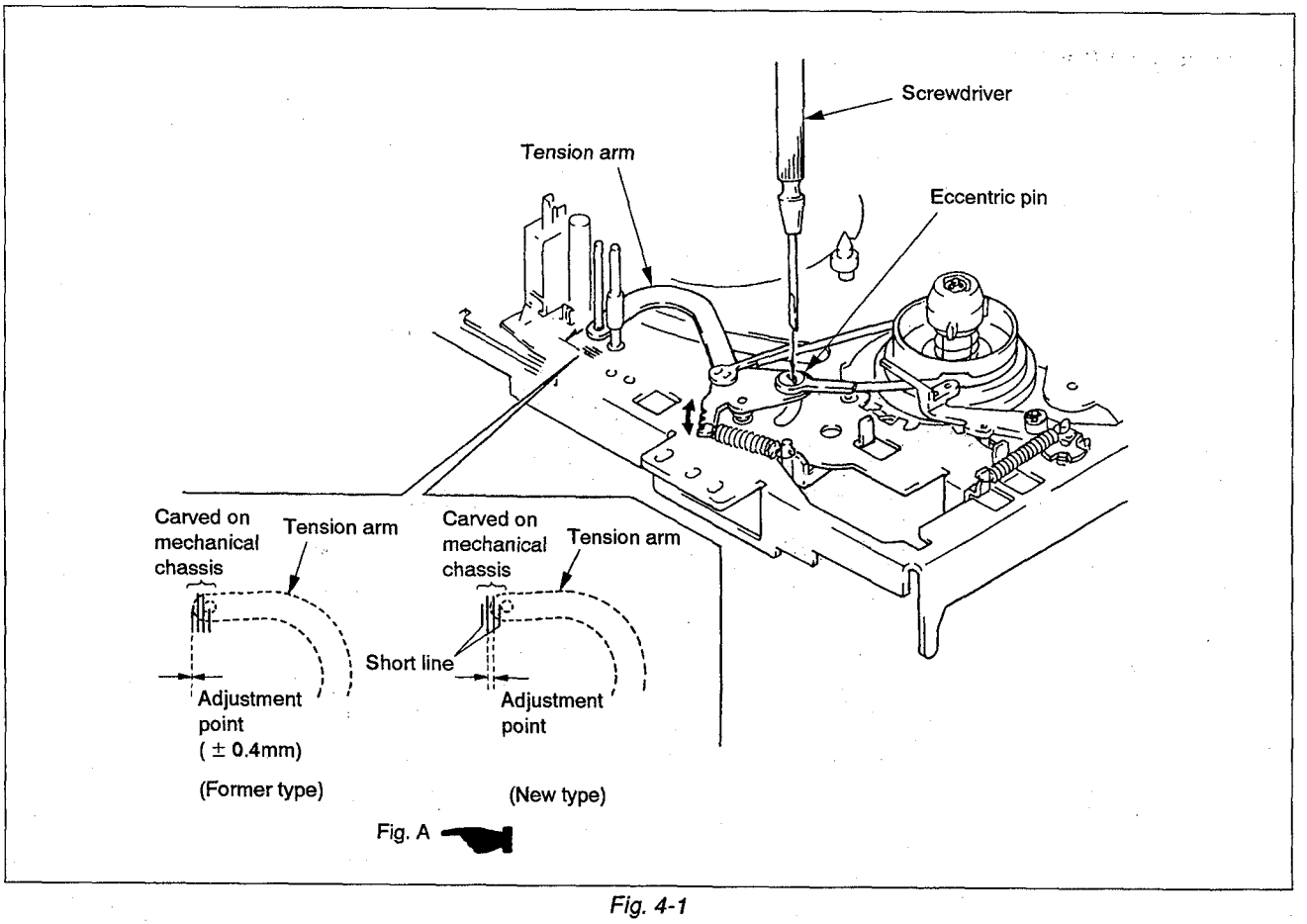

Fig. 4-1

2-6. TG8 GUIDE ROLLER HEIGHT ADJUSTMENT (Refer to VHS Mechanical Adjustment Manual IV page 36)

- As the use of TG8 height adjusting screw was cancelled, section 4-1-2 is changed.

4-1-2. TG7 TAPE PATH ADJUSTMENT (Fig. 4-2)

[Adjustment Method]

1) Load a tape, and playback the tape in the CUE mode, confirm the distance between lower flange of No. 7 guide roller and lower side of tape (Fig. A).
2) Then, feeding the tape in the REV mode, confirm the distance between lower flange of No. 7 guide roller and lower side of tape.
3) If the tape height in the REV feed is higher that in the CUE playback (Fig. B), rotate the ACE head flapping adjust screw in the direction Ⓐ so that a difference in tape height between CUE mode and REV mode becomes zero.
4) If the tape height in the REV feed is lower that in the CUE playback (Fig. C), rotate the ACE head flapping adjust screw in the direction Ⓑ so that a difference in tape height between CUE mode and REV mode becomes zero.

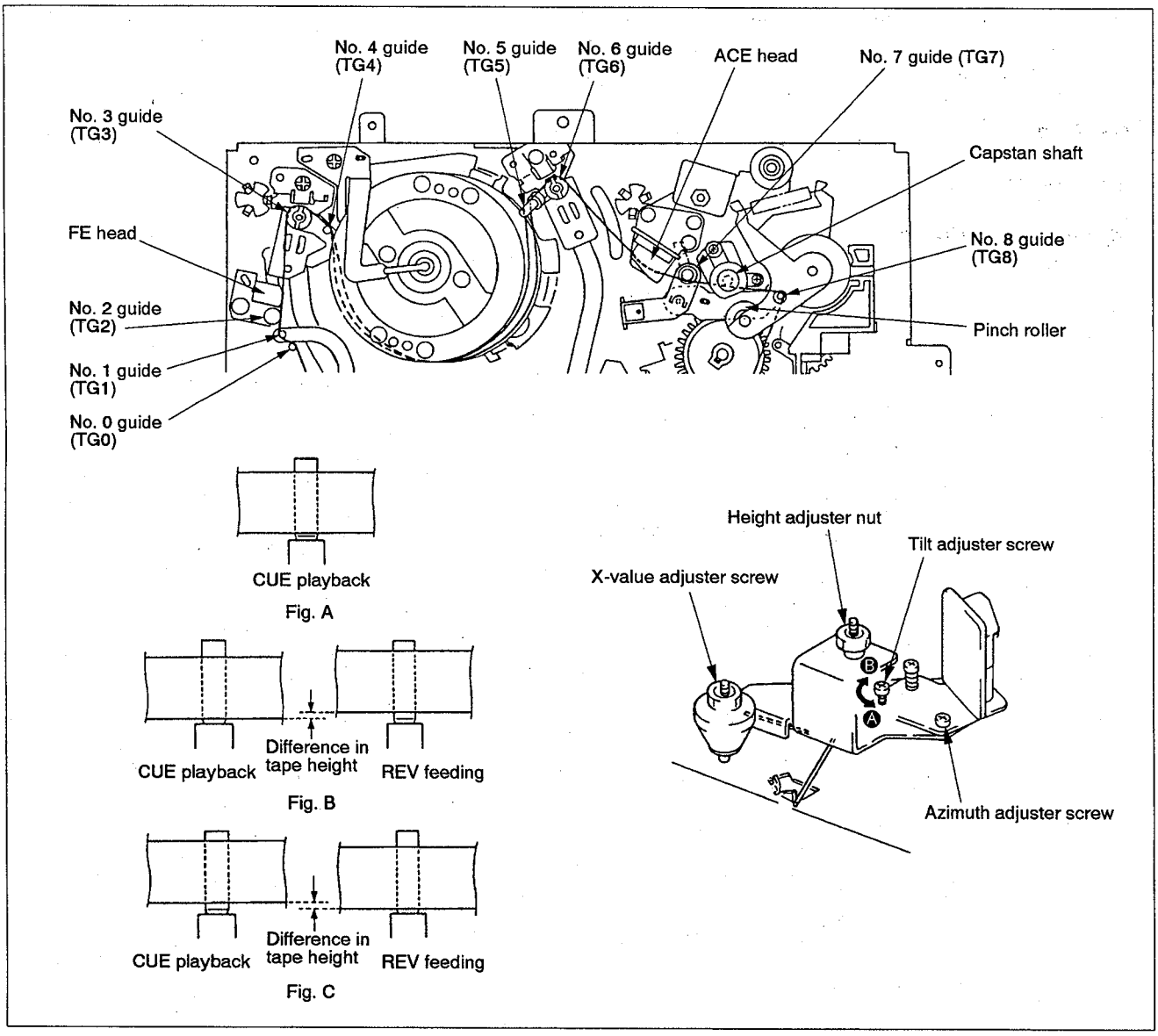

Fig. 4-2

Sony Corporation
Consumer A&V Products Company
Home A&V Products Div.

9-973-623-84

Published by Personal A&V Products Div.
Quality Engineering Dept.

VHS MECHANICAL ADJUSTMENT MANUAL IV

SONY

H MECHANISM

SERVICE MANUAL

SUPPLEMENT-3

File this supplement with the VHS mechanical adjustment IV and supplement-1, 2.

Subject: Mechanism chassis assembly changed.
PAL alignment tape changed.

(SL-600060)

TABLE OF CONTENTS

Section	Title	Page
1.	MODIFICATION	2
1-1.	Parts Requiring Cleaning	2
1-2.	Drum Assembly, Drum Base	3
1-3.	TG2 Roller, FE Head Assembly	4
1-4.	TG3, TG6 Guide Roller Assemblies	5
1-5.	Shuttle T Block and Loading Gear T Block Assemblies	6
1-6.	Shuttle S Block and Loading Gear S Block Assemblies	7
2.	ADJUSTING THE MECHANISM USING NEW ALIGNMENT TAPE (KRV-52PL for PAL)	8
2-1.	Height Adjustment of Guide Rollers No. 3 and No. 6	8
2-2.	ACE Head Assembly Adjustment (Rough Adjustment)	9
2-3.	ACE Head Assembly Adjustment (Precision Adjustment)	9
2-4.	X-Value Adjustment	10
2-5.	Adjustments After Replacing the Drum (Video Head)	14

1. MODIFICATION

1-1. PARTS REQUIRING CLEANING (Refer to VHS Mechanical Adjustment Manual IV page 7)

- Parts requiring a cleaning were changed in shape, and therefore, Fig. 2-1 for new type is added.

☛: Modificated portion

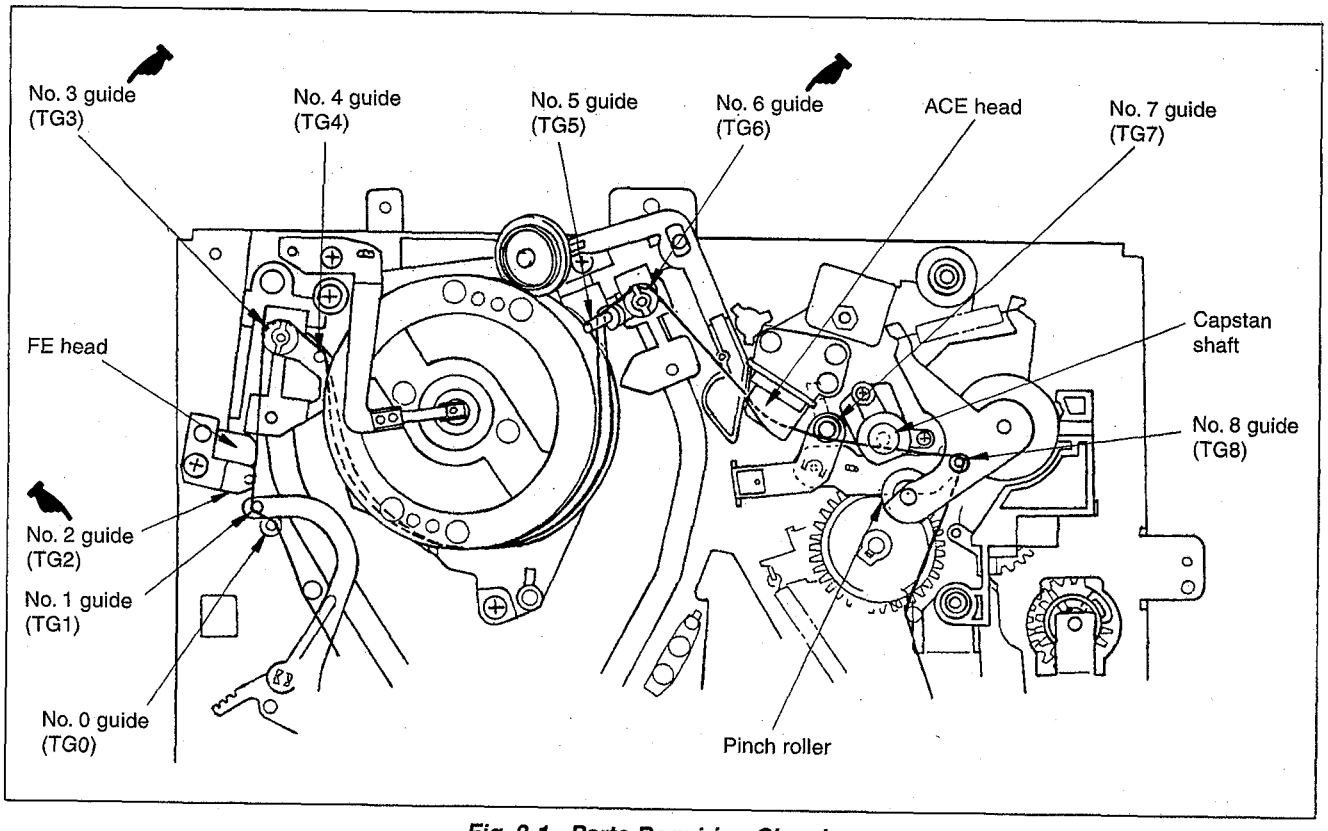

Fig. 2-1 Parts Requiring Cleaning

1-2. DRUM ASSEMBLY, DRUM BASE (Refer to VHS Mechanical Adjustment Manual IV page 11)

- The ground shaft assembly was changed and the drum base was added, and therefore Section 3-2 for new type is added.

3-2. DRUM ASSEMBLY, DRUM BASE (Fig. 3-2)

1) Remove screw ①.
2) Remove ground shaft assembly ② not to touch its tip with bare hand or tools.
3) Remove screws ③ to remove drum assembly ④.
4) Remove screws ⑤ to remove drum base ⑥.

[Note on Mounting]

- Don't touch head chips and ground shaft assembly ④ with bare hand or tools.
- Keep clean the surface contacts tape of drum assembly ④.

[Adjustment after Mounting]

- 4-1. Tape path adjustment.

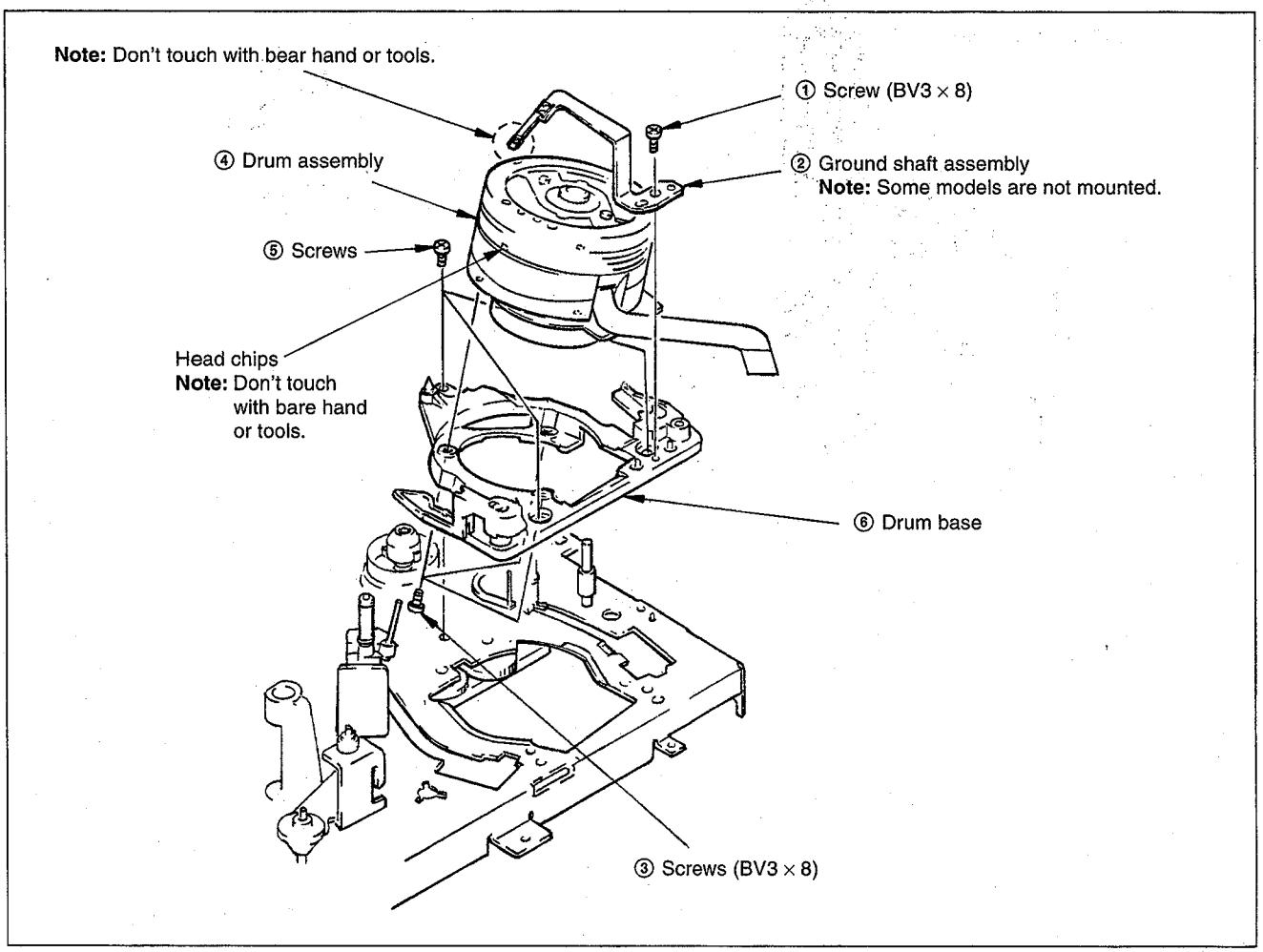

Fig. 3-2

1-3. TG2 ROLLER, FE HEAD ASSEMBLY (Refer to VHS Mechanical Adjustment Manual IV page 14)

- The TG2 roller was assembled in the FE head assembly, and therefore Section 3-5 for new type is added.

3-5. TG2 ROLLER, FE HEAD ASSEMBLY (Fig. 3-5)

1) Remove screw ①.
2) Pull out FE head assembly ②.

[Note on Mounting]

- Keep clean the surface contacts tape of TG2 roller.

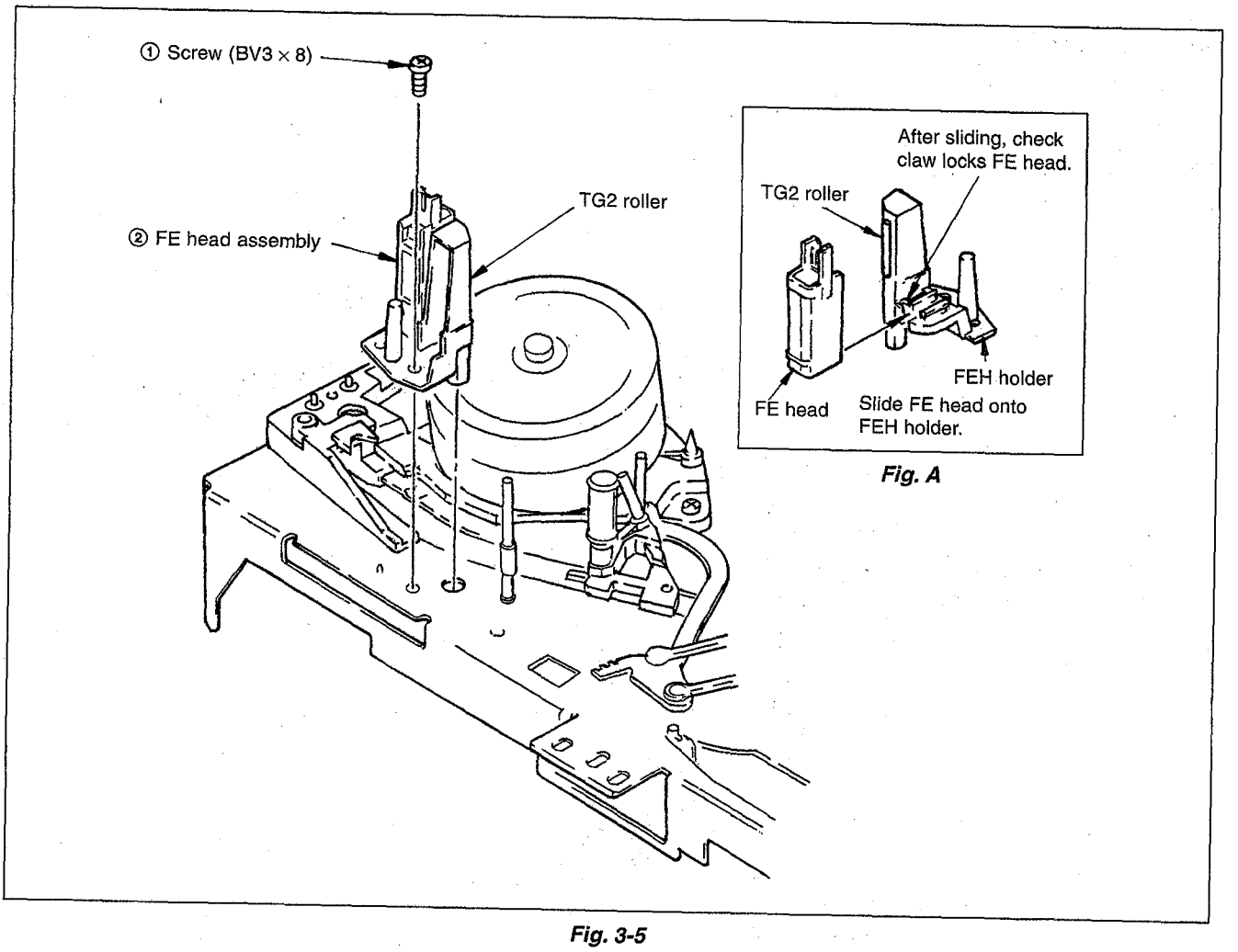

Fig. A

Fig. 3-5

1-4. TG3, TG6 GUIDE ROLLER ASSEMBLIES (Refer to VHS Mechanical Adjustment Manual IV page 17)

- The TG3 and TG6 guide roller assemblies were changed, and therefore Section 3-8 for new type is added.

3-8. TG3, TG6 GUIDE ROLLER ASSEMBLIES (Fig. 3-8)

1) TG3 guide roller assembly ① by turning it in the arrow Ⓐ direction.
2) Removal the spring ②.
3) TG6 guide roller assembly ③ by turning it in the arrow Ⓑ direction.
4) Removal the spring ④.

[Note on Mounting]

- Keep clean the surface contacts tape of TG3 and TG6 guide roller assemblies ①, ③.

[Adjustment after Mounting]

- 4-1. Tape path adjustment.

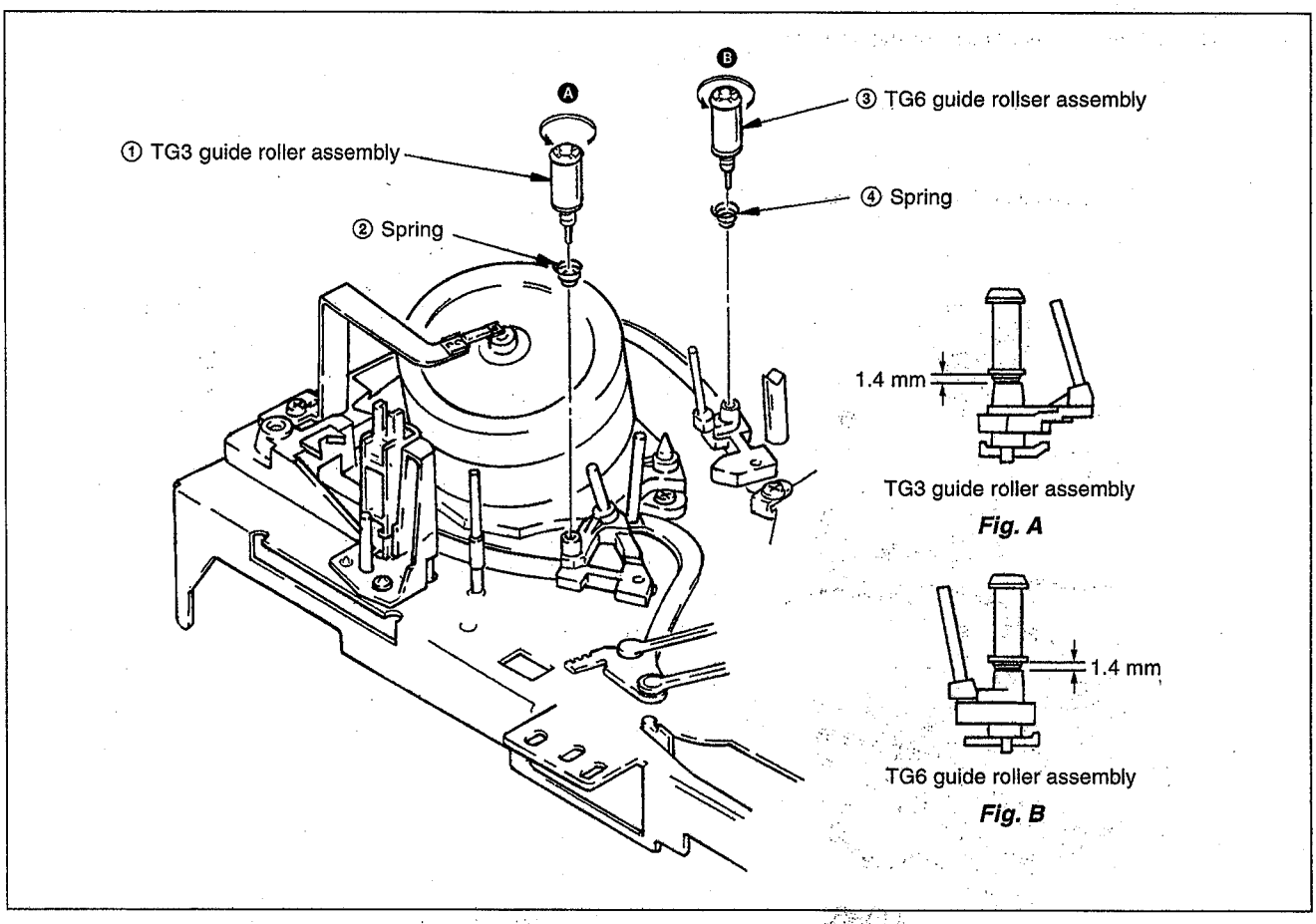

Fig. 3-8

1-5. SHUTTLE T BLOCK AND LOADING GEAR T BLOCK ASSEMBLIES (Refer to VHS Mechanical Adjustment Manual IV page 29)

- The shuttle T block and loading gear T block assemblies were changed, and therefore Section 3-19 for new type is added.

3-19. SHUTTLE T BLOCK AND LOADING GEAR T BLOCK ASSEMBLIES (Fig. 3-21)

1) Remove drum assembly and drum base. (Refer to 3-2.)
2) Remove timing belt. (Refer to 3-3.)
3) Remove CAP brake assembly. (Refer to 3-4.)
4) Remove cam motor chassis block assembly. (Refer to 3-18.)
5) Remove main slider. (Refer to 3-20.)
6) Sliding the shuttle T block assembly ① toward the direction Ⓐ, remove it through the hole Ⓑ.
7) Pull out loading gear T block assembly ②.

[Note on Mounting]

- Adjust the phase Ⓒ between loading gear (T) and loading gear (S). (Fig. A)
- Keep clean the surface contacts tape of shuttle T block assembly ①.

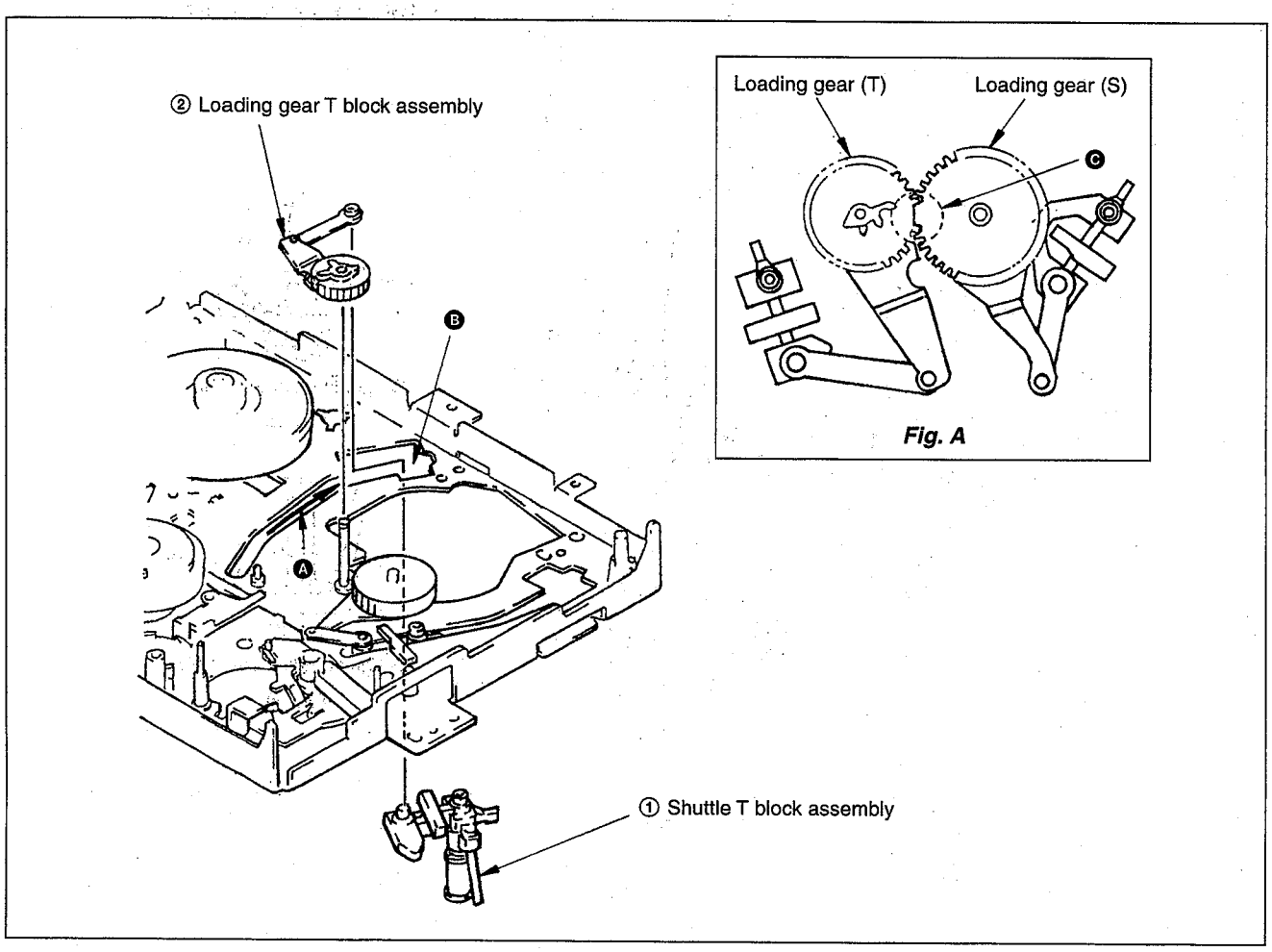

Fig. A

Fig. 3-21

1-6. SHUTTLE S BLOCK AND LOADING GEAR S BLOCK ASSEMBLIES (Refer to VHS Mechanical Adjustment Manual IV page 30)

- The shuttle S block and loading gear S block assemblies were changed, and therefore Section 3-20 for new type is added.

3-20. SHUTTLE S BLOCK AND LOADING GEAR S BLOCK ASSEMBLIES (Fig. 3-22)

1) Remove drum assembly and drum base. (Refer to 3-2.)
2) Remove timing belt. (Refer to 3-3.)
3) Remove CAP brake assembly. (Refer to 3-4.)
4) Remove cam motor chassis block assembly. (Refer to 3-18.)
5) Remove main slider. (Refer to 3-20.)
6) Sliding the shuttle S block assembly ① toward the direction Ⓐ, remove it through the hole Ⓑ.
7) Pull out loading gear S block assembly ②.

[Note on Mounting]

- Adjust the phase Ⓒ between loading gear (S) and loading gear (S). (Fig. A)
- Keep clean the surface contacts tape of shuttle S block assembly ①.

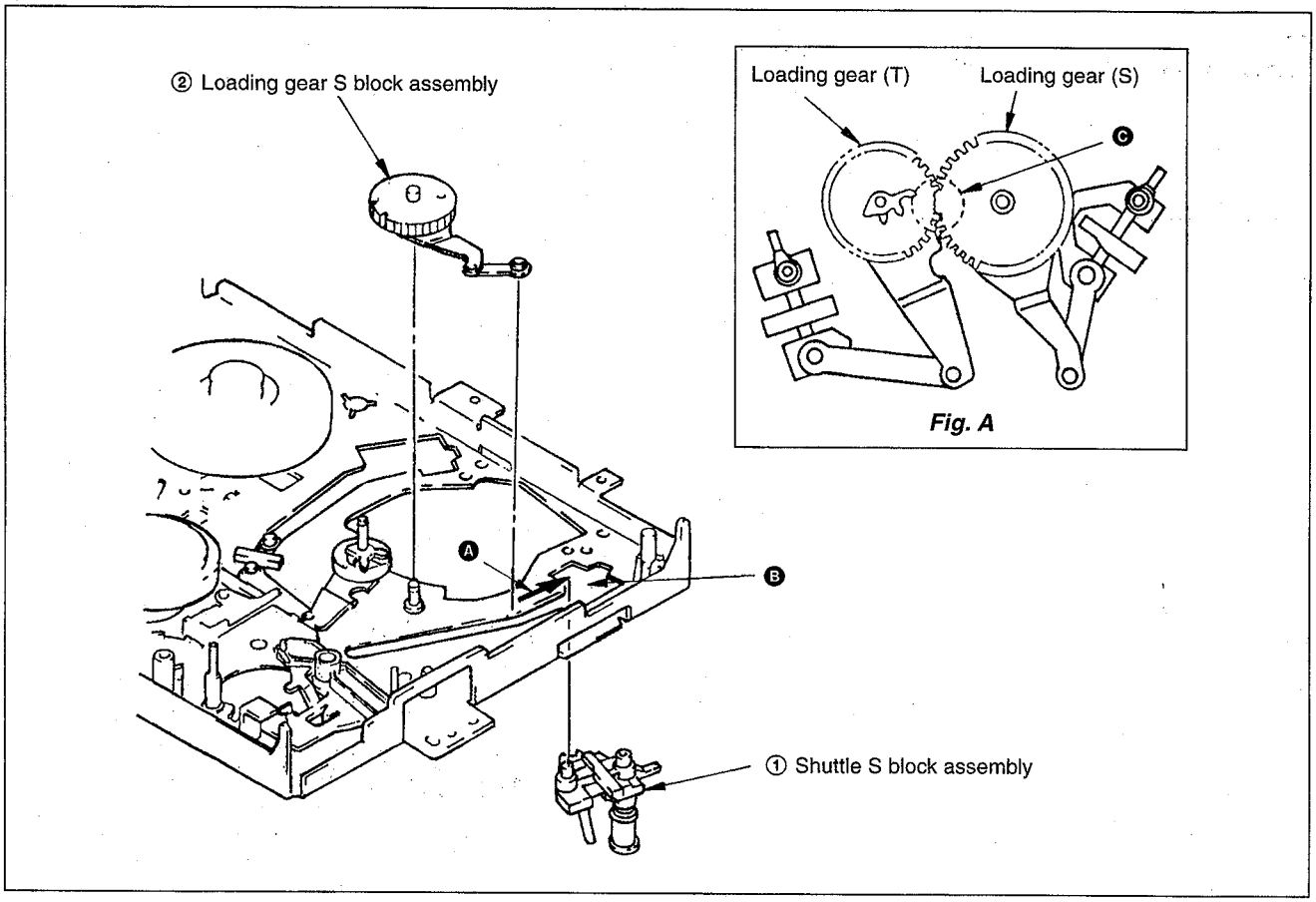

Fig. A

Fig. 3-22

2. ADJUSTING THE MECHANISM USING NEW ALIGNMENT TAPE (KRV-52PL for PAL)

The conventional alignment tape (For PAL) is now replaced with alignment tape KRV-52PL, and the following describes how to align the mechanism using the KRV-52PL. For details on the use of KRV-51P for each model, refer to the service manuals which will be issued in the future.

Name	Parts No.	Remarks
Alignment tape KRV-52PL for PAL	8-192-605-46	For tape path, audio azimuth, and X-value adjustments
Alignment tape KRV-51P for PAL	8-192-605-36	For electrical adjustments (RF, AF, and switching position) and operation check

Contents:

KRV-52PL (PAL)

Time	Video	Audio
20 min.	Recording only at 1 MHz, A-ch. EP mode RF skipping once per 5 frames	4 kHz full tracks

KRV-51P (PAL)

Class	Mode	Time	Video	Audio (HiFi/Normal)
1	SP	7 min.	Color bar	400 Hz
2	SP	3 min.	Mono. scope	400 Hz
3	EP	7 min.	Color bar	400 Hz
4	EP	3 min.	Mono. scope	400 Hz

2-1. HEIGHT ADJUSTMENT OF GUIDE ROLLERS NO. 3 AND NO. 6

Mode	Playback
Signal	Alignment tape KRV-52PL (For PAL)
Measuring instrument	Oscilloscope TIM/DIV: 2ms Trigger source: CH2 Trigger slope: +
Measuring point	CH-1: Connector PB RF pin for RF PC board check CH-2: Connector RF SWP pin for RF PC board check
Adjustment locations	Height adjustment screw for No. 3 tape guide roller Height adjustment screw for No. 6 tape guide roller

[Adjustment Method]

1) Deactivate the automatic tracking control, and set the tracking control at the center position. To set the tracking control at the center position for the VCRs equipped with the ▲ and ▼ tracking control keys, press both the ▲ and ▼ tracking control keys at the same time. For the VCRs not equipped with the tracking control keys, deactivate the automatic tracking control by pressing the tracking AUTO/MANUAL key on the remote control unit during threading operation (after a tape is inserted but before the VCR starts playing back the tape).
2) Turn the height adjustment screws of tape guide rollers No. 3 and No. 6 so that the RF output envelope becomes as flat as possible.
3) Press the ▲ tracking control key, and check that both the beginning and end of the RF output change together the same in amplitude.
4) Press the ▼ tracking control key, and check that both the beginning and end of the RF output change together the same in amplitude.

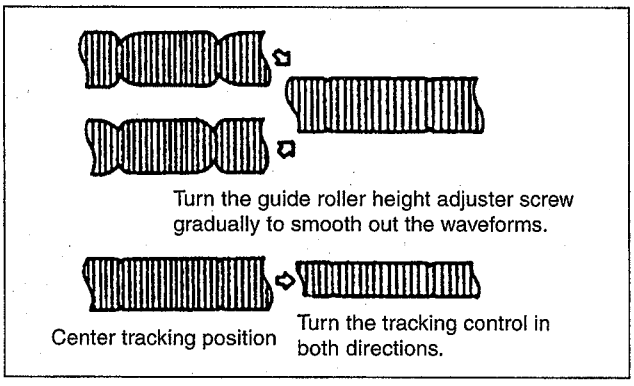

Fig. 2-1

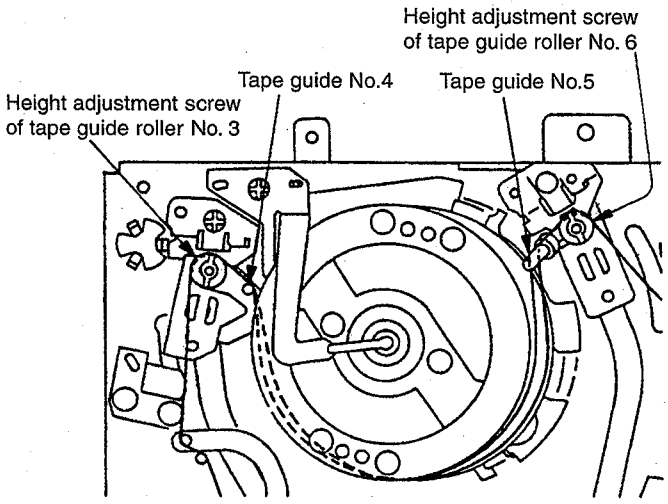

Fig. 2-2

2-2. ACE HEAD ASSEMBLY ADJUSTMENT (ROUGH ADJUSTMENT) (Figs. 2-3 and 2-4)

Purpose: Allows the tape to make even contract with the head for recording and playback of the specified track.

Mode	Playback
Jig	Blank tape
Adjustment locations	Height adjuster nut, Tilt adjuster screw

[Adjustment Method]

1) Mount the ACE head assembly. AT this time, adjust the height so that the height of guide flange No. 7 matches the level of the lower edge of the control head.
2) Remove the adjustment tool and load a new tape, then set the unit for playback.
3) Check that the tape does not curl or rise up noticeably near the ACE head.
4) If the tape curls up or rises noticeably, readjust the tilt adjuster screw and the height adjuster nut.
   (The height of the ACE head should be adjusted so that the lower edge of the tape is approx. 0.1 to 0.15 mm from the control head.)
5) Perform precision adjustment.

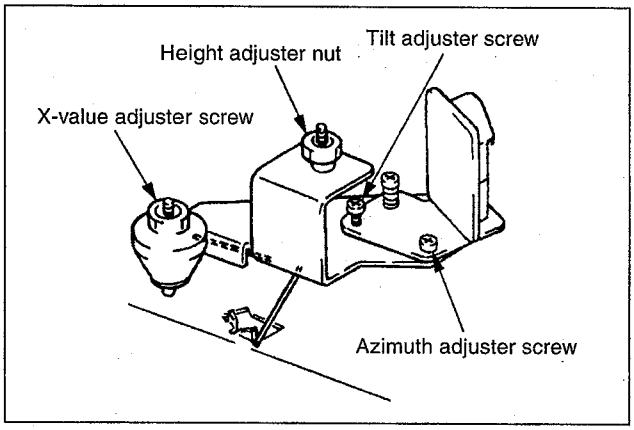

Fig. 2-3

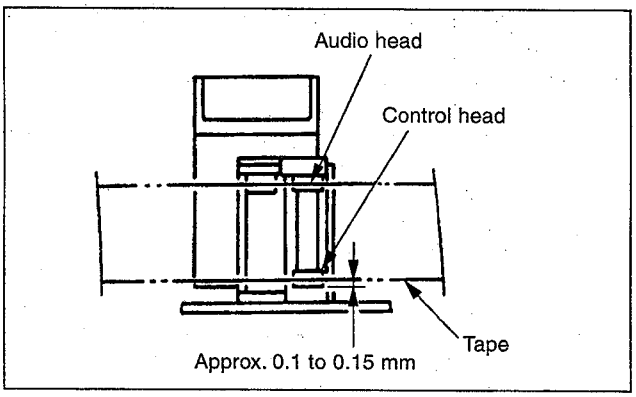

Fig. 2-4

2-3. ACE HEAD ASSEMBLY ADJUSTMENT (PRECISION ADJUSTMENT)

Mode	Playback
Signal	Alignment tape (KRV-52PL 4 kHz) (For PAL)
Measuring instrument	Oscilloscope
Measuring point	Audio output terminal
Adjustment locations	Azimuth adjuster screw, Height adjuster nut, Tilt adjuster screw

[Adjustment Method]

1) Adjust the tilt adjuster screw in the FWD or REV mode so that the lower flange of guide No. 7 does not curl up or rise.
2) Alternately adjust the azimuth adjuster screw, the height adjuster nut, and the tilt adjuster screw to maintain even audio output at maximum with minimum deviation.

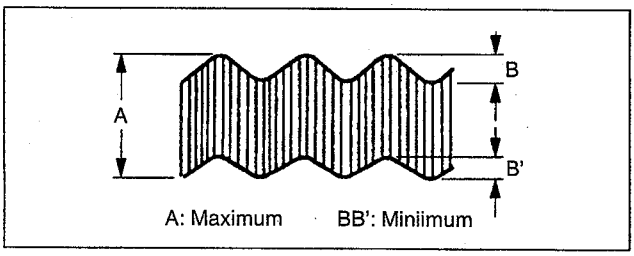

Fig. 2-5

Note: In the adjustment of ACE head assembly (coarse adjustment and fine adjustment), if a azimuth, height and tilt were adjusted, again adjust the height of No. 3 and No. 6 guide rollers.

2-4. X-VALUE ADJUSTMENT

Purpose: To obtain compatibility with other VCRs.

Precaution: Before starting to adjust X-value, set the tracking control at the center position. To set the tracking control at the center position for the VCRs equipped with the ▲ and ▼ tracking control keys, press both the ▲ and ▼ tracking control keys at the same time. For the VCRs not equipped with the tracking control keys, deactivate the automatic tracking control by pressing the tracking AUTO/MANUAL key on the remote control unit during threading operation (after a tape is inserted but before the VCR starts playing back the tape).

Mode	Playback
Signal	Alignment tape KRV-52PL
Measuring instrument	Oscilloscope TIM/DIV: 2ms Trigger source: CH2 Trigger slope: +
Measuring point	CH-1: Connector PB RF pin for RF PC board check CH-2: Connector RF SWP pin for RF PC board check
Adjustment locations	X-value adjuster screw

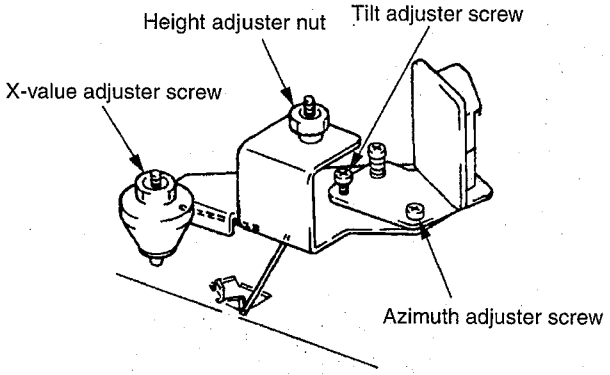

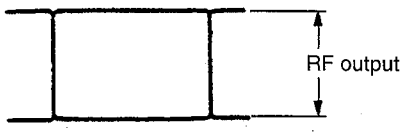

RF output shall be maximum at the center position of the tracking control.

Fig. 2-6

[Adjustment Method]

Set the tracking control at the center position. For the VCRs equipped with narrow gap video heads, set the X-value adjustment screw where a maximum RF output is obtained. For the VCRs equipped with wide gap video heads, set the X-value adjustment screw both where a maximum RF output is obtained and where the RF output decreases immediately when the ▼ tracking control key is pressed.

1. Adjusting X-value

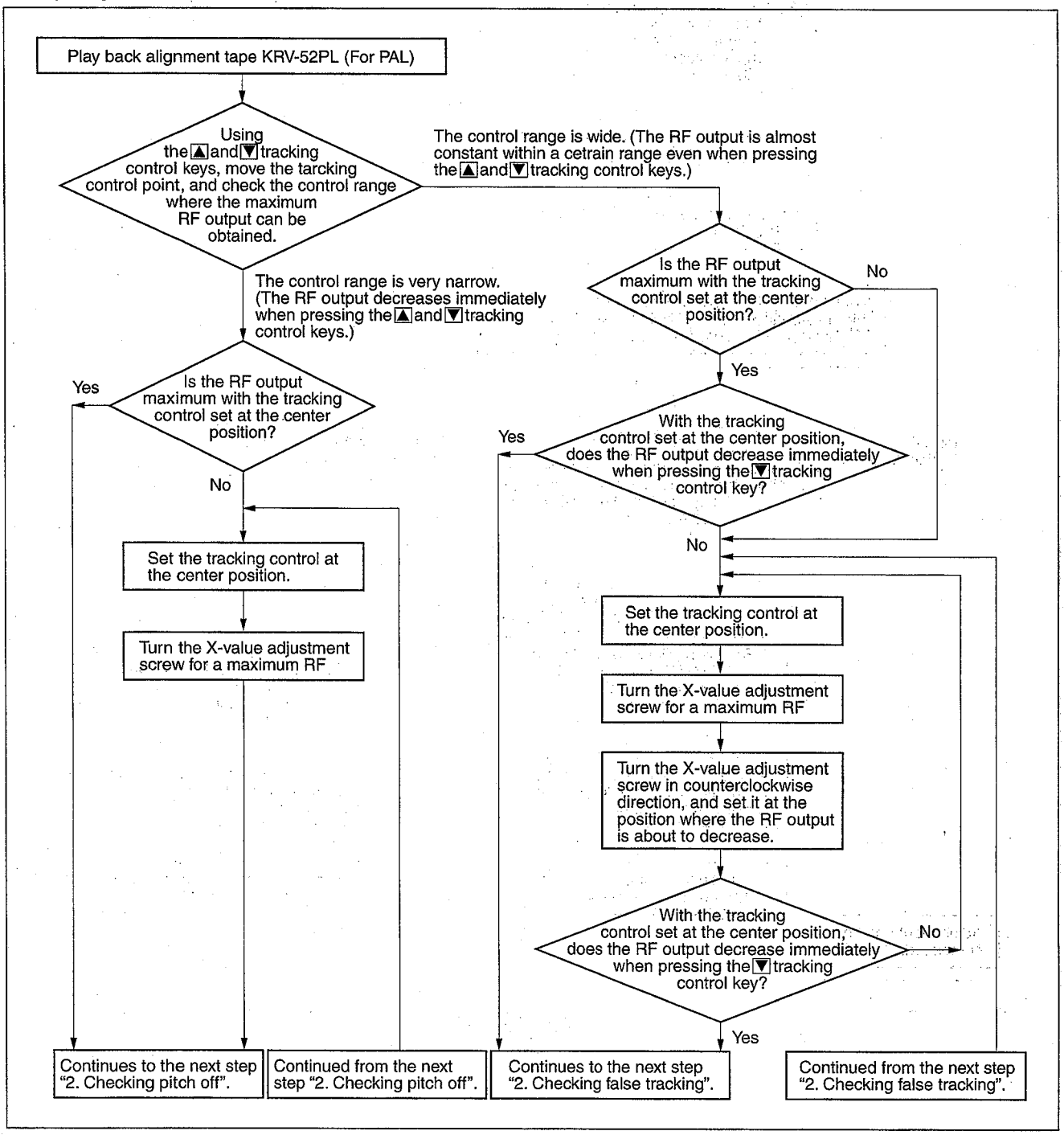

Fig. 2-7

2. Checking false tracking

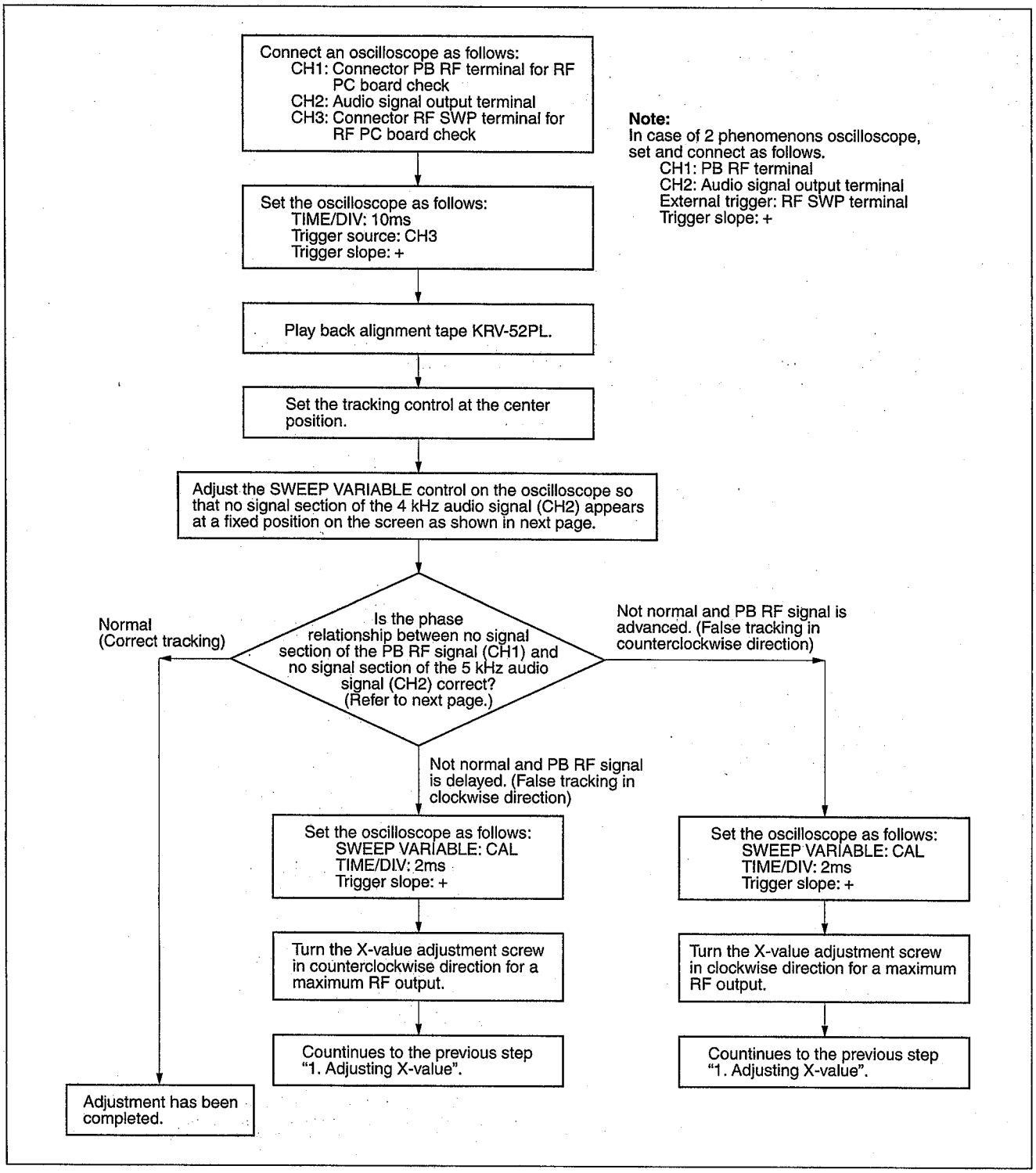

Fig. 2-8

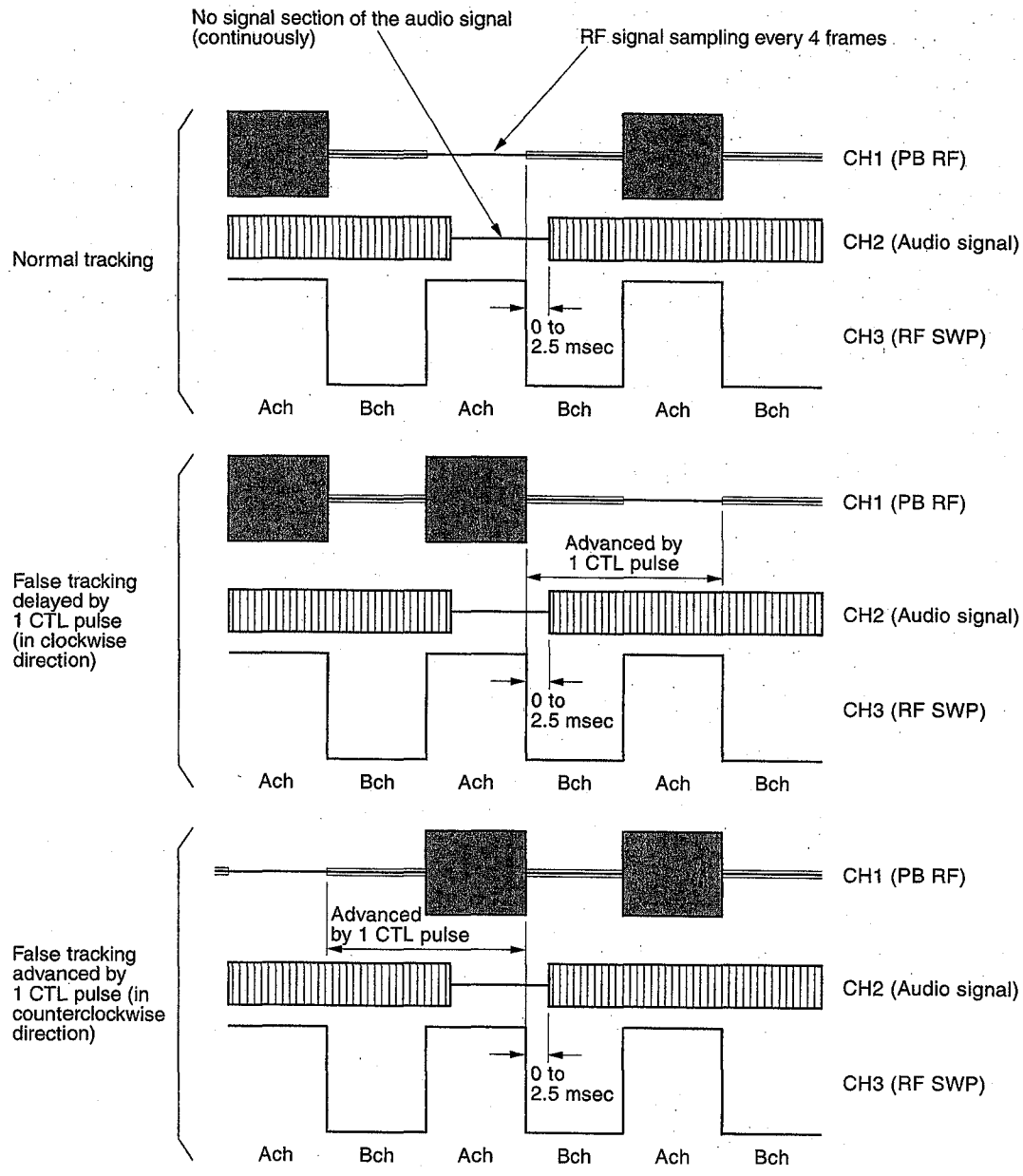
No signal section of the audio signal (continuously)
RF signal sampling every 4 frames
Normal tracking
CH1 (PB RF)
CH2 (Audio signal)
CH3 (RF SWP)
0 to 2.5 msec
Ach
Bch
Ach
Bch
Ach
Bch
False tracking delayed by 1 CTL pulse (in clockwise direction)
Advanced by 1 CTL pulse
False tracking advanced by 1 CTL pulse (in counterclockwise direction)

Fig. 2-9

2-5. ADJUSTMENT AFTER REPLACING THE DRUM (VIDEO HEAD)

Purpose: Co-relative height, X-value and other factors of the drum will deviate from those of the guide roller. If the drum is replaced properly, these deviations are extremely small.

Note 1: Deactivate the automatic tracking control for setting the mechanism in manual tracking control mode.

Note 2: To set the tracking control at the center position, deactivate the automatic tracking control by pressing the tracking AUTO/MANUAL key on the remote control unit during threading operation (after a tape is inserted but before the VCR starts playing back the tape).

Mode	Playback
Signal	Alignment tape KRV-52PL (For PAL), blank tape
Measuring instrument	Oscilloscope
Measuring point	CH-1: Connector PB RF pin for RF PC board check. CH-2: Connector RF SWP pin for RF PC board check.
Adjustment locations	Guide roller (Refer to 2-1.) Switching position (Refer to the Service Manual) X-value (Refer to 2-3.)

[Adjustment Method]

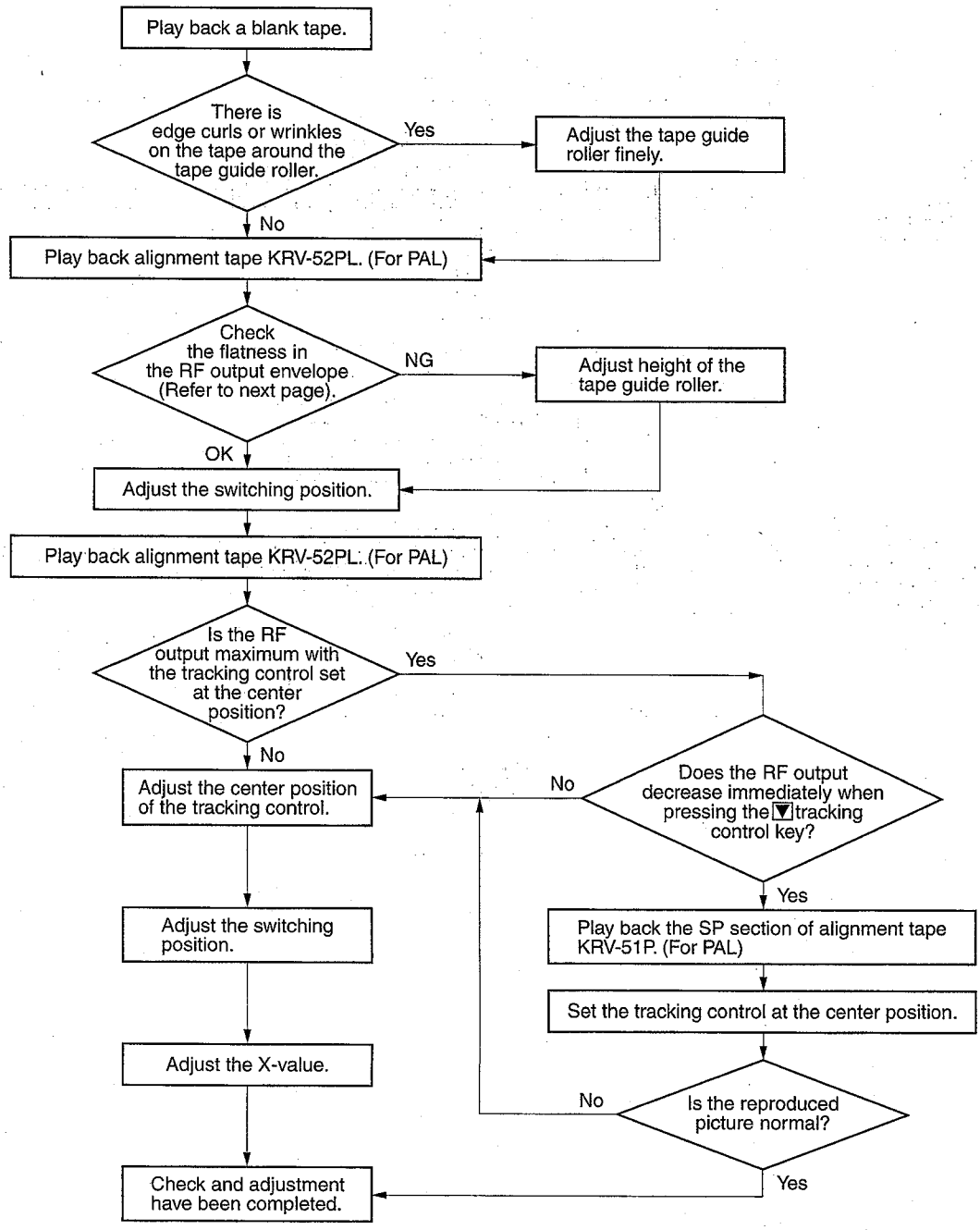

Fig. 2-10

[Checking the evenness and fluctuation of the RF output]

1) Set the RF output to the maximum level using the tracking buttons.

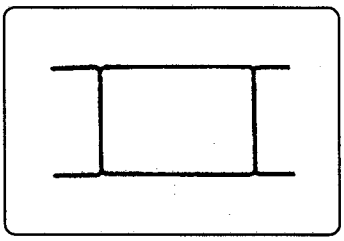

2) Perform fine adjustment of the voltage level range of the oscilloscope, then adjust the RF output deviation to within 4 gradations.

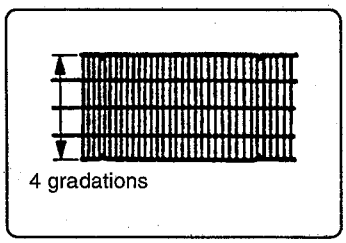

3) Press the tracking buttons and adjust the maximum amplitude of the RF output to within 3 gradations.
4) AT this time, check if the minimum amplitude is more than 2 gradations.

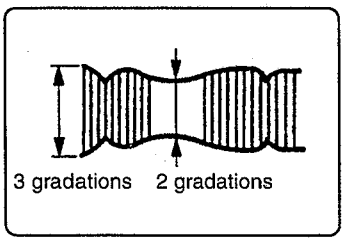

5) Check that the RF output fluctuation between minimum and maximum levels is within 13%.

Fig. 2-11

V13000

8 mm Video MECHANICAL ADJUSTMENT MANUAL V

F MECHANISM

Video 8

File with the SERVICE MANUAL

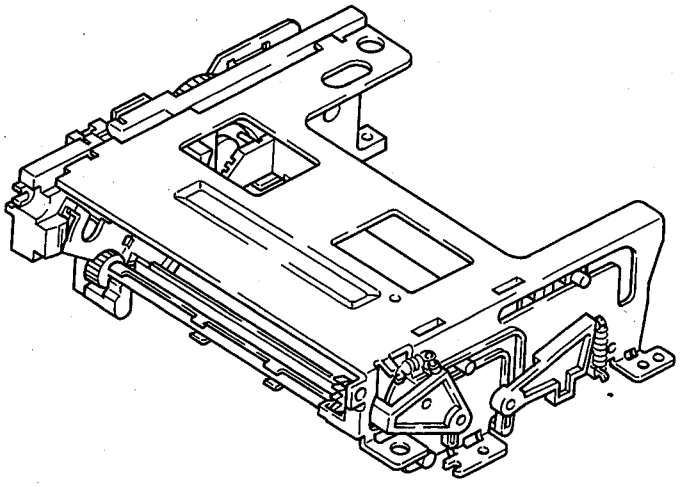

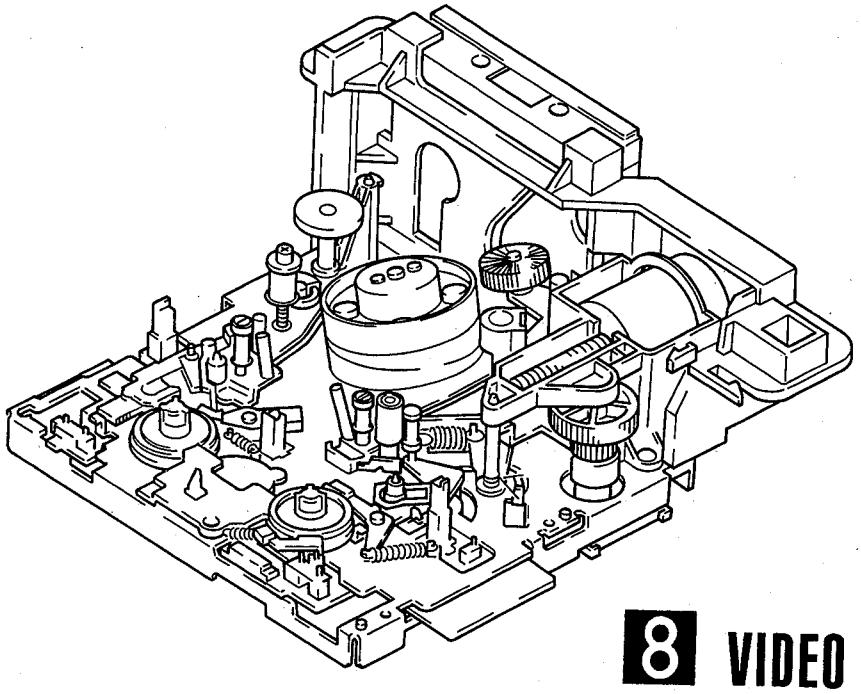

8 VIDEO RECORDER

SONY®

TABLE OF CONTENTS

Section	Title	Page
1.	**MAIN FEATURES**	3
2.	**PREPARATION FOR MECHANICAL CHECK, ADJUSTMENT AND REPLACEMENT**	4
2-1.	FL Cassette Compartment Assembly	4
2-2.	Operation with FL Cassette Compartment Assembly Removed	5
2-2-1.	Activating Loading	5
2-2-2.	Activating Play Status	5
2-2-3.	Activating Ejection	5
2-3.	Handling of Mode Selector II	6
2-3-1.	General	6
2-3-2.	Operation	7
3.	**PERIODIC CHECK AND MAINTENANCE**	9
3-1.	Cleaning of Rotary Drum Assembly	9
3-2.	Cleanign of Tape Path	9
3-3.	Periodic Check Items	10
3-4.	Service Jigs List	11
4.	**MECHANICAL CHECK, ADJUSTMENT AND REPLACEMENT**	12
4-1.	RP Block	12
4-2.	Impedance Roller	13
4-3.	HC Roller Assembly	13
4-4.	Pendulum Base Assembly and Soft Brake Assembly (T)	14
4-5.	Brake (S) Arm and Brake (T) Arm Assembly	15
4-6.	Tension Regulator Assembly, Reel Table (S) Assembly and Reel Table (T) Assembly	16
4-7.	TG2 Assembly	17
4-8.	TG7 Arm Assembly	18
4-9.	Cam Motor Assembly	19
4-10.	Pinch Arm Assembly	20
4-11.	Worm Wheel Bracket	21
4-12.	Capstan Motor	22
4-13.	Drum Assembly	23
4-14.	Pulley Base Assembly	24
4-15.	Loading Drive Lever	25
4-16.	Rotary Switch and Main Cam	26
4-17.	Slide Plate	27
4-18.	Loading Gear (S) Assembly	28
4-19.	Loading Gear (T) Assembly	29
4-20.	Coaster (S)	30
4-21.	Coaster (T) Assembly	30
4-22.	Rotary Upper Drum Replacement	31
4-23.	Adjustment of Tension Regulator Position	32
4-24.	FWD Back Tension Adjustment	32
4-25.	Reel Torque Check	32
4-26.	FL Worm Wheel	33
5.	**TAPE PATH ADJUSTMENT**	34
5-1.	Preparation for Adjustment	35
5-2.	Tracking Adjustment	36
5-3.	No.2 Guide (TG2) Adjustment	36
5-3-1.	No.2 Guide (TG2) Height Presetting	36
5-3-2.	No.2 Guide (TG2) Adjustment	37
5-4.	No.7 Guide (TG7) Adjustment	37
5-5.	CUE and REV Waveform Check	37
5-6.	Check After Adjustment	38
5-6-1.	Tracking Check	38
5-6-2.	Rising Check	38
5-6-3.	Tape Path Check	38
6.	**EXPLODED VIEWS**	39
6-1.	Front Loading Assembly	39
6-2.	MD Chassis Assembly (1)	40
6-3.	MD Chassis Assembly (2)	41
6-4.	MD Chassis Assembly (3)	42
7.	**DIAGRAMS**	43
8.	**ELECTRICAL PARTS LIST**	46

1. MAIN FEATURES

The mechanism developed exclusively for the 8mm video provides the following features.

1. Faster rewind time than U mechanism.
   4 times high speed. (about 1 minute in case of P120 cassette.)

2. Jog shuttle supporting by addition of forced swing mechanism.

3. High speed start on Picture mechanism.
   Stop → playback about 0.8 sec.

4. Head clogging prevention by adoption of new cleaning roller.

5. Reduction of the number of parts. (about 40 parts less than U mechanism.)

6. FL capstan motor drive.

2. PREPARATION FOR MECHANICAL CHECK, ADJUSTMENT AND REPLACEMENT

For removal of the cabinet and boards, refer to "Disassembly" in each Service Manual.
Mechanical adjustment is done in the EJECT mode. (To select the EJECT mode, refer to "2-3, Handling of Mode Selector II".)

2-1. FL CASSETTE COMPARTMENT ASSEMBLY (Fig. 1)

1. Removal

1) Select the EJECT mode.
2) Remove three screws ① and remove the FL cassette compartment ② toward the arrow.

2. Mounting

1) Select the EJECT mode.
2) Mount the FL cassette compartment ② with its tab Ⓐ engaged with the hole Ⓑ in mechanical chassis.
3) Tighten three screws ①.

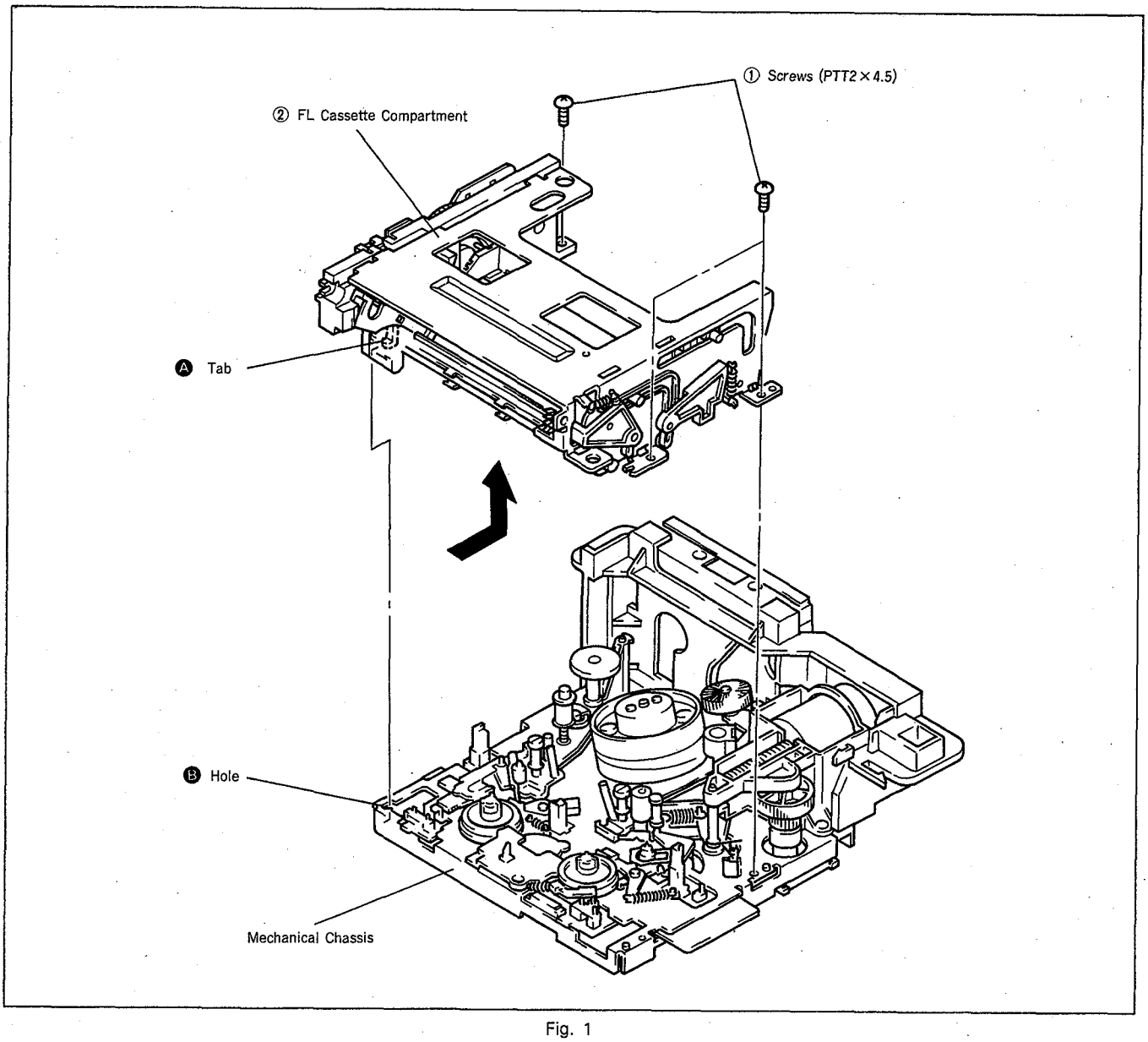

Fig. 1

2-2. OPERATION WITH FL CASSETTE COMPARTMENT ASSEMBLY REMOVED (Fig. 2)

2-2-1. Activating Loading

1) Referring to the Service Guide, supply the power with the cabinet removed.
2) Cover the LED ① with an opaque cap ②.
3) Press the cassette down switch ③ three times.

2-2-2. Activating Play Status

1) Perform each step in 2-2-1. Activating Loading.
2) Press the PLAY button while keeping the cassette down switch pressed.

2-2-3. Activating Ejection

1) Press the EJECT button.

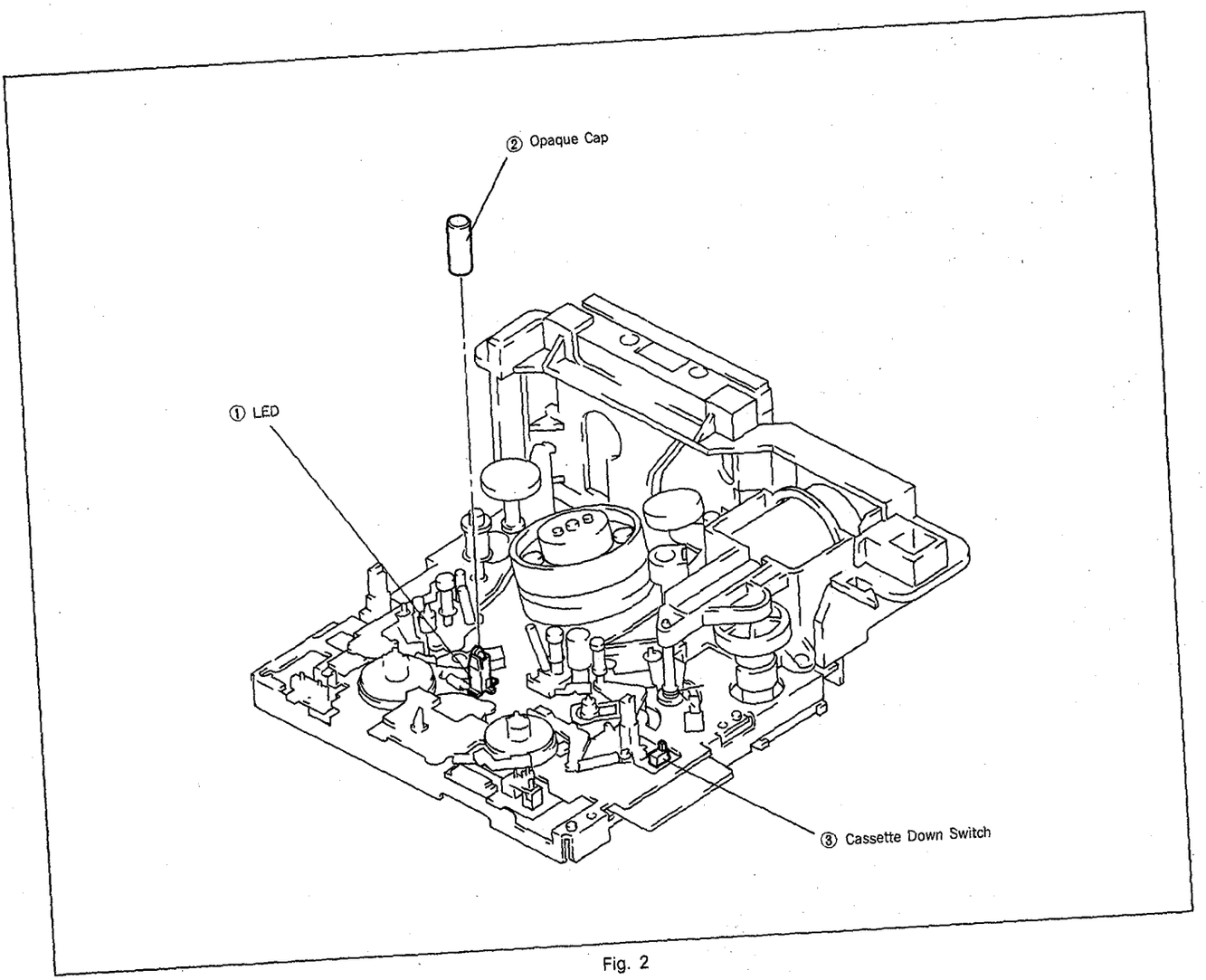

Fig. 2

2-3. HANDLING OF MODE SELECTOR Ⅱ

2-3-1. General

The mode selector is used as a mechanism drive tool to help maintenance of various mechanical decks, and it provides the following functions.

1. MANUAL test

   In this mode, the motor is driven only during the time that the switch is pressed, so that the operator can control the motor freely.

2. STEP test

   In this mode, the motor is driven from the present status attained from sensor until the status changes to another status, so that the operator can confirm every operations.

3. AUTO test

   This mode checks if the mechanism operates normally following the status change table registered to each mechanical deck through a sequence of operation in all statuses of the mechanism. If it detects a faulty status change during operation, it displays "NG" and stops operation.

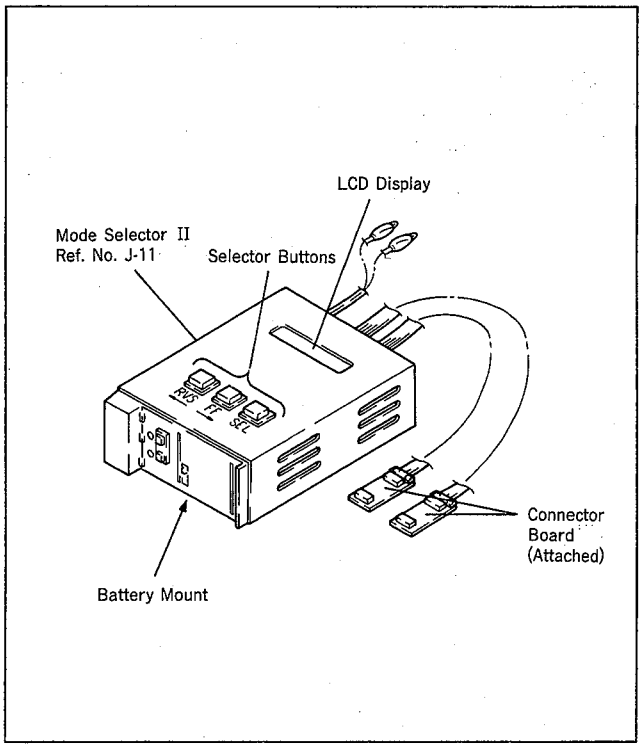

Fig. 3

MODE SELECTOR Ⅱ (J-6082-282-A) CONNECTION

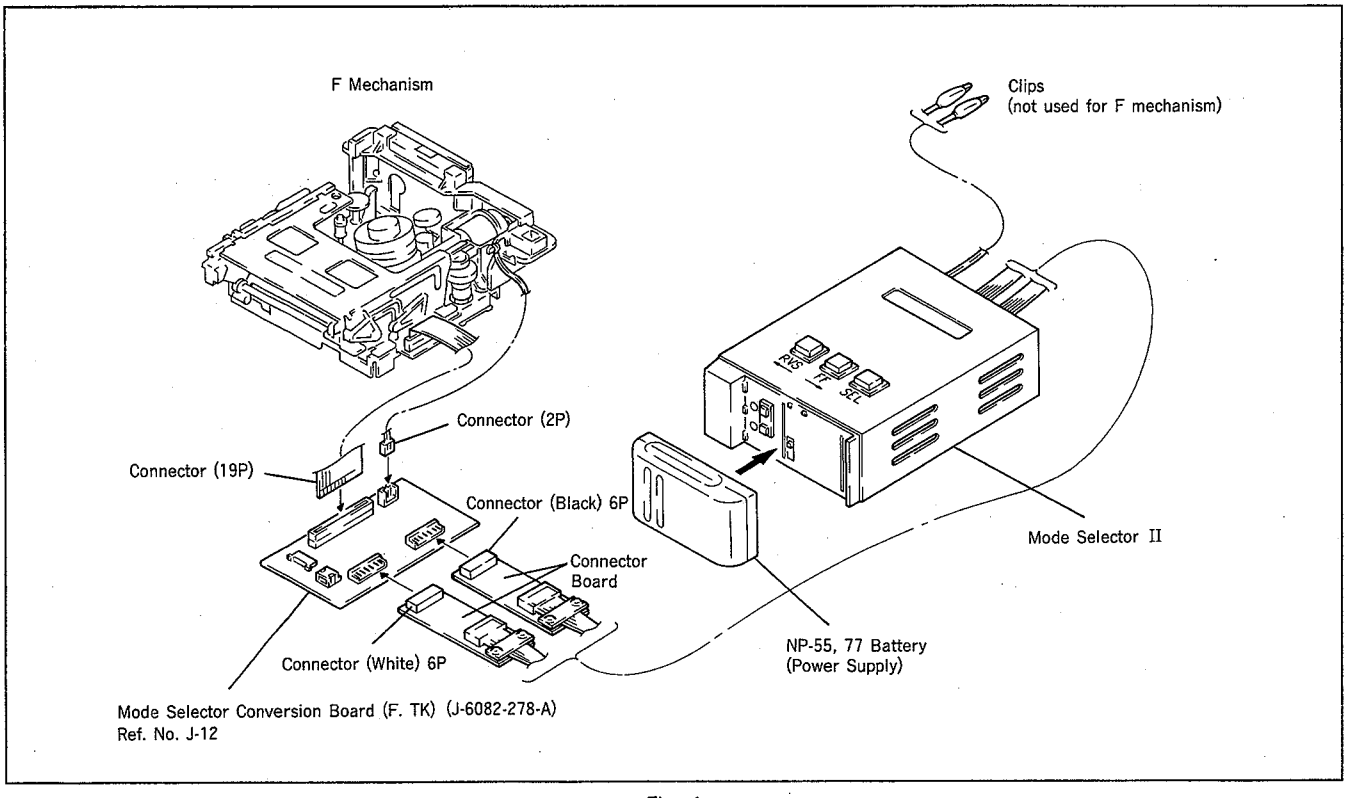

Fig. 4

2-3-2. OPERATION

1. Operation Flow Chart

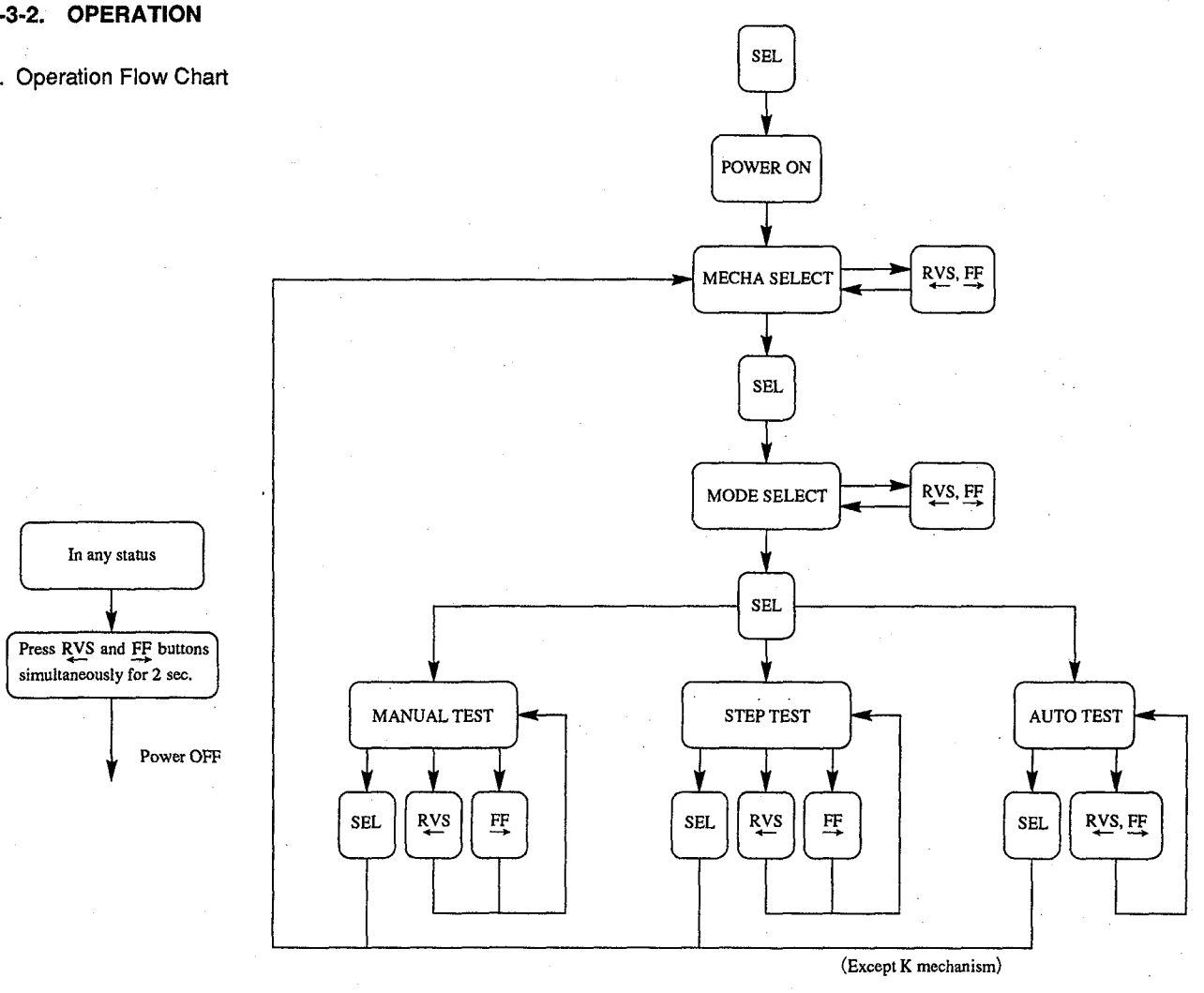

2. Mode Selector Ⅱ power ON

Press the SEL button to turn on the power supply.

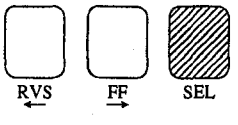

3. Mode Selector Ⅱ power OFF

At the power ON, press RVS and FF buttons simultaneously for more than 2 seconds to turn off the power supply.

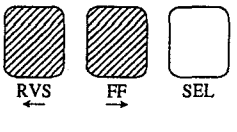

4. Mechanism selection

The "MECHA SELECT" is displayed on LCD immediately after the power supply is turned on. Call the desired mechanism by pressing the RVS or FF button, and press the SEL button. Thus, the mechanism has been selected. (Fig. 5-1 indicates F mechansim.)

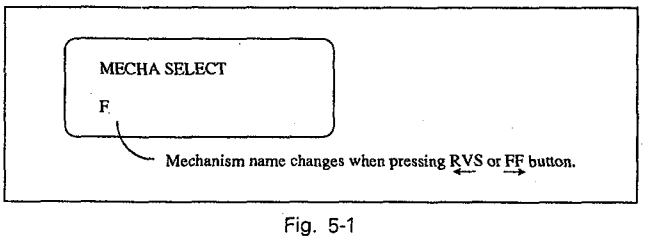

Fig. 5-1

5. Mode selection

Select the test mode "MANUAL", "STEP" or "AUTO" to be executed.
Call the desired mode by pressing the RVS or FF button, and press the SEL button. Thus, the mode has been selected.

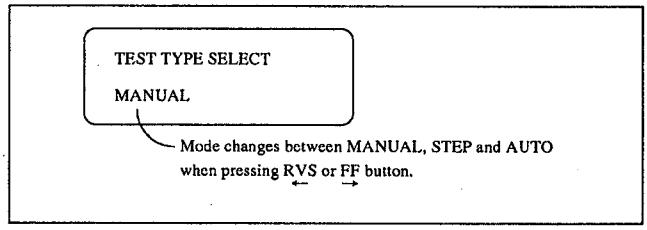

Fig. 5-2

6. MANUAL test

This mode drives the motor only during the time that the RVS or FF button is pressed.

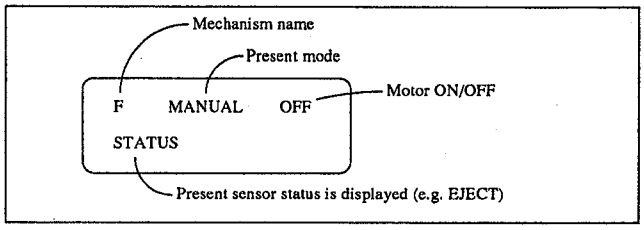

Fig. 5-3

7. STEP test

This mode drives the motor from the present status until the status changes in the direction selected with RVS or FF button.

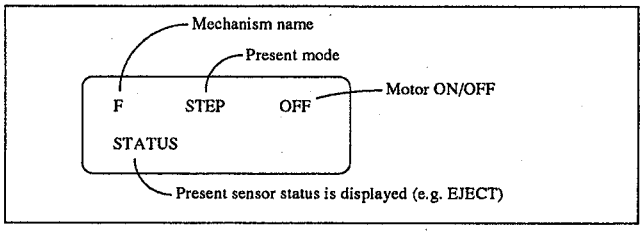

Fig. 5-4

8. AUTO test

This mode checks if the operation sequence stored for each mechanical deck is normal, and if the signals from sensors that execute a sequence of operation meet the stored sequence. The same operation is executed if either RVS or FF is pressed.

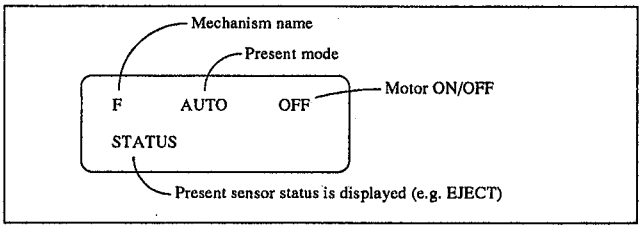

Fig. 5-5

Mechanism status (position) change sequence

After selection of mechanism, if either MANUAL or STEP mode is selected and the RVS or FF button is pressed, the mechanism status (position) can be designated. (Designated status is displayed at STATUS position.)
EJECT ⟷ UNLOAD END ⟷ STOP 1 ⟷ HIGH SPEED REW ⟷ DEW ⟷ LOAD END ⟷ STOP 2 ⟷ FWD. P ⟷ RVS. P

Code A	B	C	D		F mechanism
0	1	1	1	1	EJECT
0	0	1	1	2	UNLOAD END
1	0	1	0	3	STOP 1
1	0	1	1	4	HIGH SPEED REW
1	0	0	0	5	DEW
1	1	0	0	6	
1	1	1	0	7	LOADE END
0	1	1	0	8	STOP 2
0	1	0	0	9	
1	1	0	1	10	FWD. P/FWD
0	0	0	1	11	RVS. P/RVS
1	0	0	1	12	

9. Battery alarm display

In case of low voltage of battery, which is a power supply of Mode Selector, the alarm message is displayed (not synchronous display).
In such a case, no operation is available, requiring battery replacement.

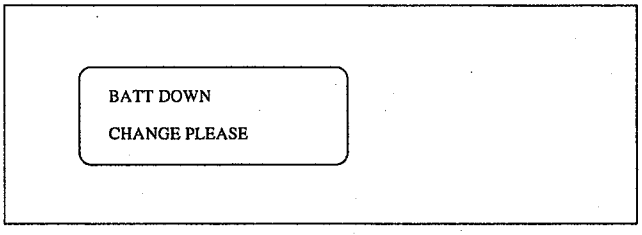

Fig. 5-6

3. PERIODIC CHECK AND MAINTENANCE

• Carry out the following maintenance and periodic checks in order not only to fully exhibit the functions and performance of the set, but also for the equipment and tape. After repairing, service the set as follows, regarless of the length of use.

3-1. CLEANING OF ROTARY DRUM ASSEMBLY

1) Gently apply chamois cloth (Ref. No. J-2) soaked in cleaning liquif (Ref. No.J-1) to the rotary drum assembly.
Clean it by rotating the upper rotary drum assembly slowly counterclockwise by hand.

Note : Do not rotate the motor by power or rotate the upper rotary drum assembly clockwise by hand. Also, the head tip is highly likely to be damaged if the chamois cloth is moved in a pependicular direction to the it. make sure to follow the instructions above for cleaning the rotarydrum assembly.

3-2. CLEANING OF TAPE PATH (Fig.6)

1) In the [EJECT] mode, clean the tape running system (TG1, 2, 3, 4, 5, 6, 7, pinch roller, and capstan shaft) and the lower drum, using a super fine applicator (Ref. No. J - 3) soaked in the cleaning liquid.

Note : Note that no oil or grease of each link mechanism adheres to the super fine applicator (Ref. No. J - 3).

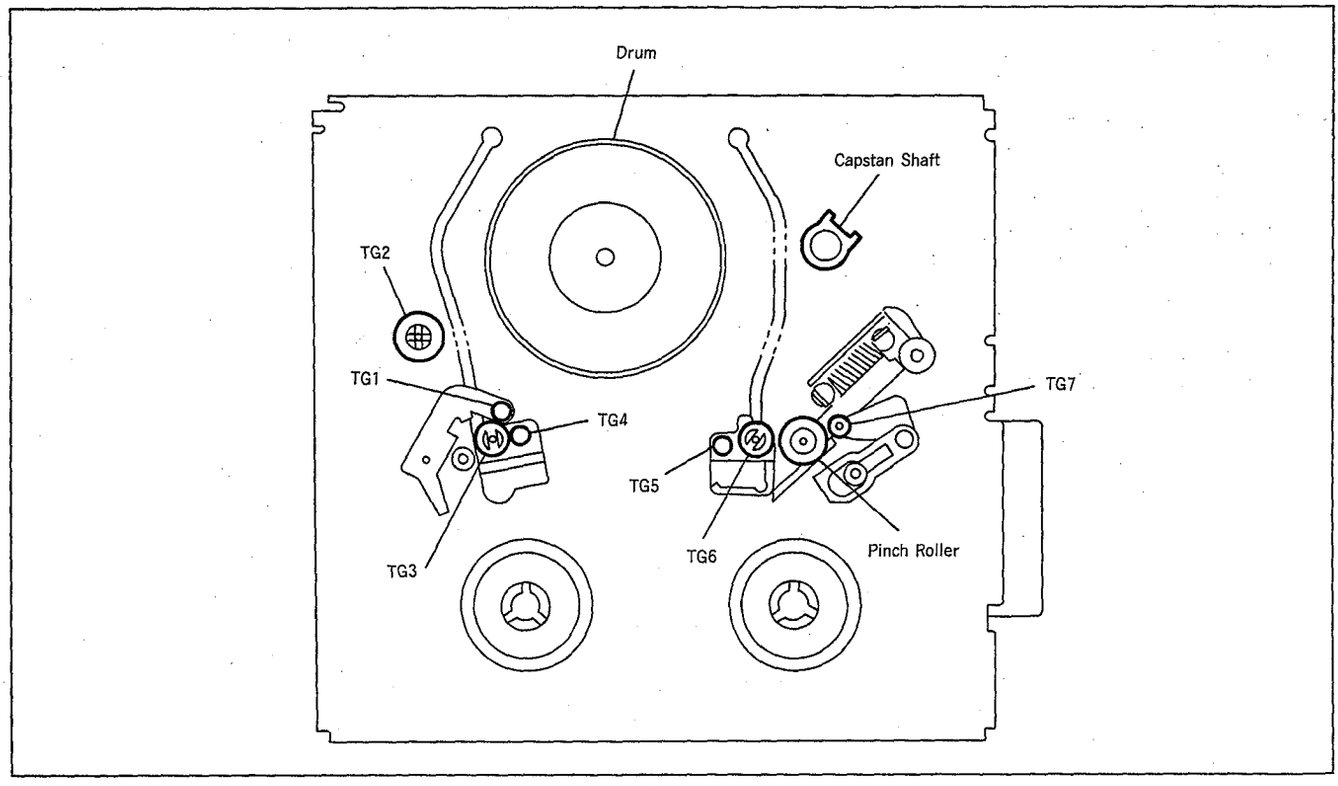

Fig. 6

3-3. PERIODIC CHECK ITEMS

Location of Maintenance and check		Hours of Use (H)										Remarks
		500	1000	1500	2000	2500	3000	3500	4000	4500	5000	
Tape transportion System	Cleaning of tape path surface	○	○	○	○	○	○	○	○	○	○	Be careful of oil
	Cleaning and degaussing of rotary assembly	○	○	○	○	○	○	○	○	○	○	Be careful of oil
Driving System	Timing belt Timing belt (FL)	–	☆	–	☆	–	☆	–	☆	–	☆	3-953-986-01 3-954-079-01
	Capstan shaft	–	◎	–	◎	–	◎	–	◎	–	◎	Be absolutely careful not to get oil on the tape path surface.
	Relay pulley shaft	–	◎	–	◎	–	◎	–	◎	–	◎	
	Loading motor	–	☆	–	☆	–	☆	–	☆	–	☆	X-3942-946-1
Performance Confirmation	Abnormal noise	☆	☆	☆	☆	☆	☆	☆	☆	☆	☆	
	Back tension measurement	–	☆	–	☆	–	☆	–	☆	–	☆	
	Brake system	–	☆	–	☆	–	☆	–	☆	–	☆	
	FWD. RVS torque measurement	–	☆	–	☆	–	☆	–	☆	–	☆	

○ : Cleaning ◎ : Oil ☆ : Confirmation

Note : When overhauling, refer to the items above to replace parts.

Note : Concering oil

- Be sure to use specified oil. (If you use oil with different viscosity, etc., it may cause troubles.)
  Oil : Part No. 7-661-018-18 (Mitsubishi Diamond Oil Hydrofluid NT-68)
- When lubricating bearings, be sure use oil free from dust, etc. (If you use oil with dust, etc. contained, it may cause bearings to be wron out or seized.)
- A drip of oil refers to an amount attached to the tip of a ϕ 2mm stick shown in the right figure.

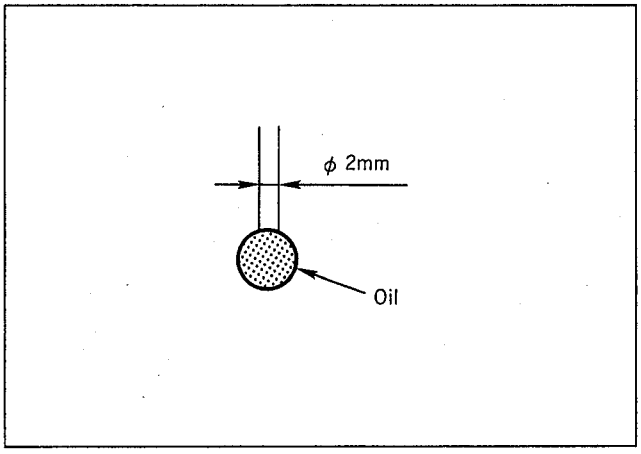

3-4. SERVICE JIGS LIST

Ref. No.	Name	Part No.	Fixture No.	Usage and Others
J-1	Cleaning fluid	Y-2031-001-0		
J-2	Chamois cloth	2-034-697-00		
J-3	Super fine applicator (Made by NIPPON APPLICATOR, P752D)			
J-4	Head degausser	Widely available		
J-5	Small mirror for adjustment Spare mirror	J-6080-029-A J-6080-030-1	SL-5052	Tape path
J-6	Alignment tape NTSC (WR5-1NP) PAL (WR5-1CP)	8-967-995-02 8-967-995-07		Tape path
J-7	FWD and RVS winding torque cassette	J-6080-824-A	GD-2086	
J-8	Rotary drum jig	(Attached to the maintenance rotary upper drum)		
J-9	Screwdriver for tape path	J-6082-026-A		For tape guide adjustment
J-10	Adjusting remote controller (Modified RM-95)	J-6082-053-B		Tape pathe (Setting of PATH mode)
J-11	Mode selector II	J-6082-282-A		For all models
J-12	Mode selector conversion board (F, TK)	J-6082-278-A		
J-13	FWD B.T. adjusting driver chip	J-6082-187-A		

Other equipment • Oscilloscope
• Analog tester (20 kΩ)

J-1

J-2

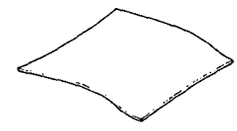

J-3

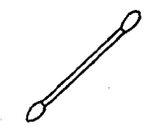

J-4

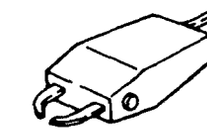

J-5

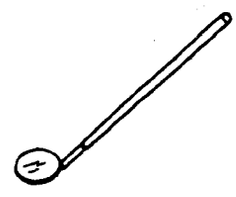

J-6

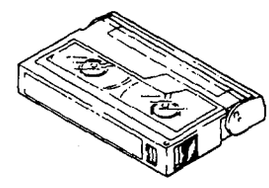

J-7

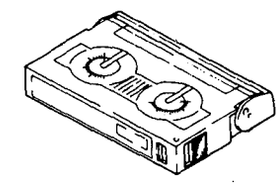

J-8

(Attached to the maintenance rotary upper drum)

J-9

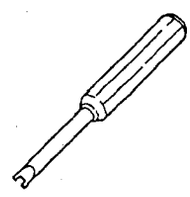

J-10

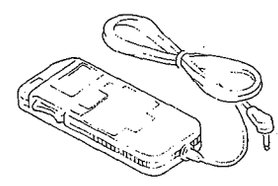

J-11

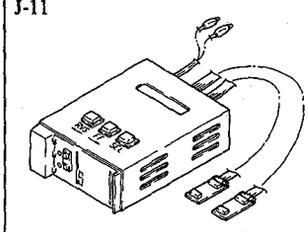

J-12

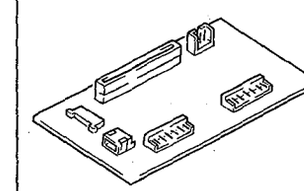

J-13

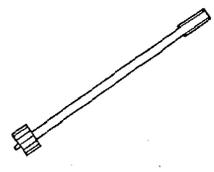

4. MECHANICAL CHECK, ADJUSTMENT AND REPLACEMENT

Note : Use the Mode selector II (Ref. No. J-11) for the following mechanical checks, adjustments and replacements.

Note : The modes in [ ] are those set by pressing the Mode selector buttons.

4-1. RP BLOCK (Fig.7)

1. Removal

1) Remove a screw ①.
2) Disconnect the connector ②.
3) Disengage claws Ⓐ at two places and remove the RP block ③.
4) Remove a screw ④, then the RP frame ⑤ in arrow direction.

2. Mounting

1) Mount the RP frame with its slot Ⓑ engaged with the chassis Ⓒ.
2) Tighten a screw ④.
3) Mount the RP block ③ and tighten a screw ①.
4) Connect the connector ②.

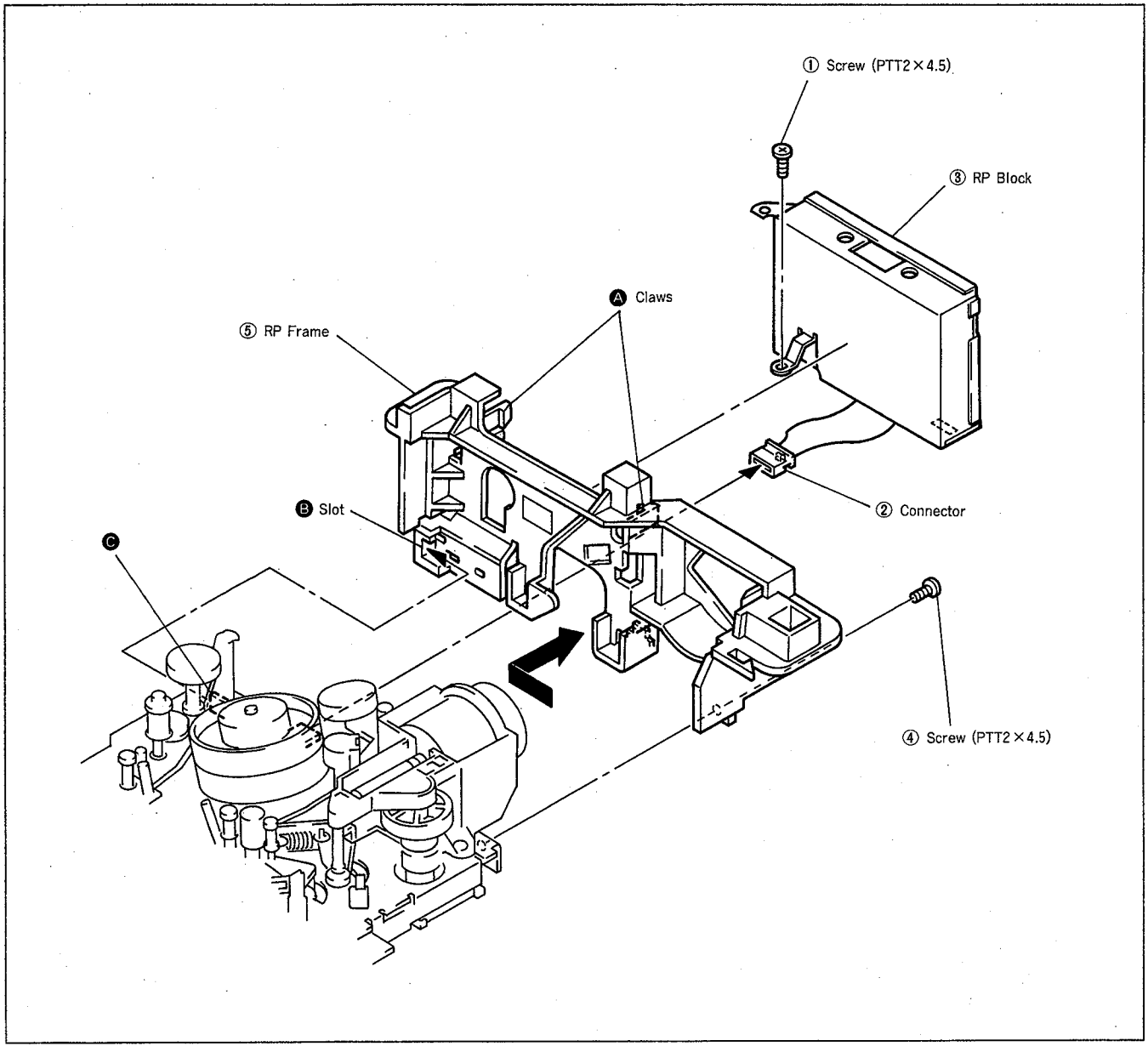

Fig. 7

4-2. IMPEDANCE ROLLER (Fig. 8)

1. Removal

1) Referring to 2-1, remove the FL cassette compartment assembly.
2) Referring to 4-1, remove the RP block.
3) Remove a tension coil spring ①.
4) Disengage a claw Ⓐ and remove the impedance roller base assembly ②.
5) Disengage a claw Ⓑ and remove the impedance roller ③.

2. Mounting

1) Mount the impedance roller ③, then the impedance roller base assembly ②.
2) Attach a tension coil spring ①.
3) Referring to 4-1, mount the RP block.
4) Referring to 2-1, mount the FL cassette compartment assembly.

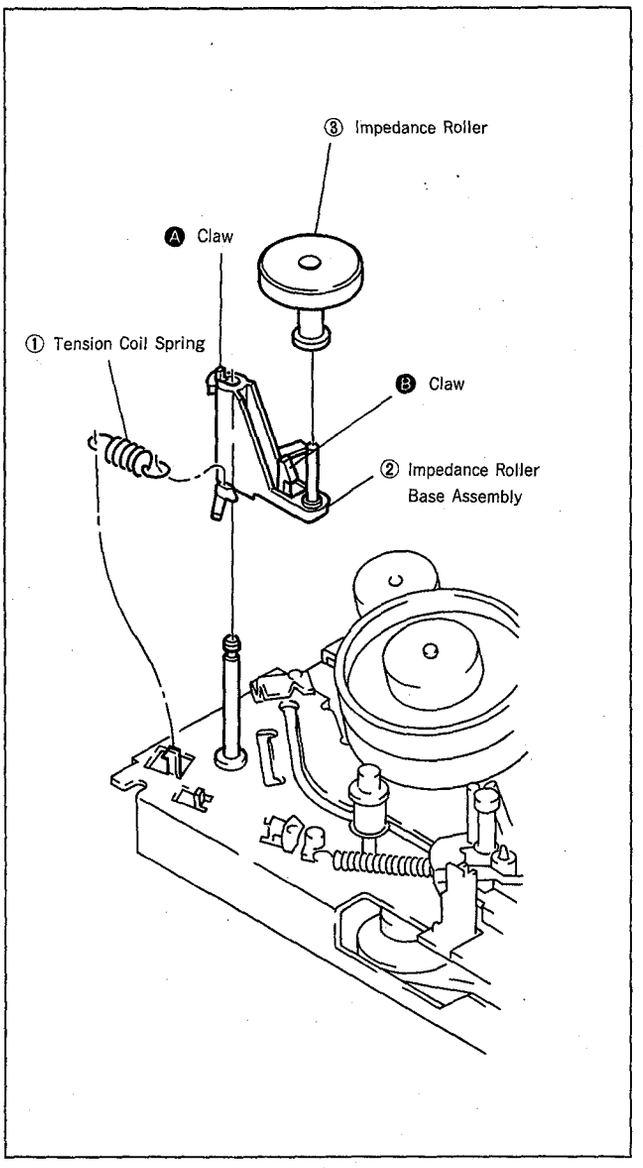

Fig. 8

4-3. HC ROLLER ASSEMBLY (Fig. 9)

1. Removal

1) Referring to 4-1, remove the RP block.
2) Disengage a claw Ⓐ and remove the HC arm assembly ①.
3) Remove a lock washer ②, then the HC roller assembly ③.

2. Mounting

1) Mount the HC roller assembly ③ and fix with a lock washer ②.
2) Mount the HC arm assembly ①.
3) Referring to 4-1, mount the RP block.

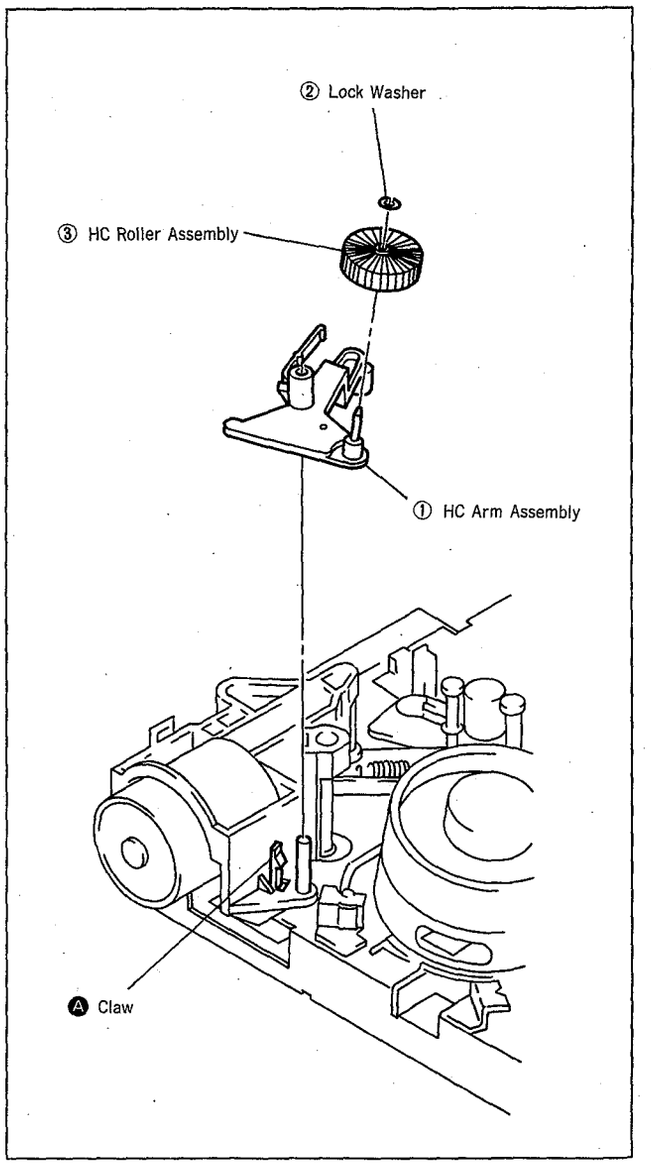

Fig. 9

4-4. PENDULUM BASE ASSEMBLY AND SOFT BRAKE ASSEMBLY (T) (Fig. 10)

1. Removal

1) Referring to 2-1, remove the FL cassette compartment assembly.
2) Remove a tension coil spring ①.
3) Disengage a claw Ⓐ and remove the soft brake (T) assembly ②.
4) Remove two screws ③, then the reel unlock plate ④.
5) Remove the pendulum base assembly ⑤.

2. Mounting

1) Mount the pendulum base assembly ⑤ with its shaft Ⓑ inserted in the Ⓒ of pendulum forcing arm.
2) Mount the reel unlock plate ④ and tighten two screws (3).
3) Mount the soft brake (T) assembly ② and attach a tension coil spring ①.
4) Referring to 2-1, mount the FL cassette compartment assembly.

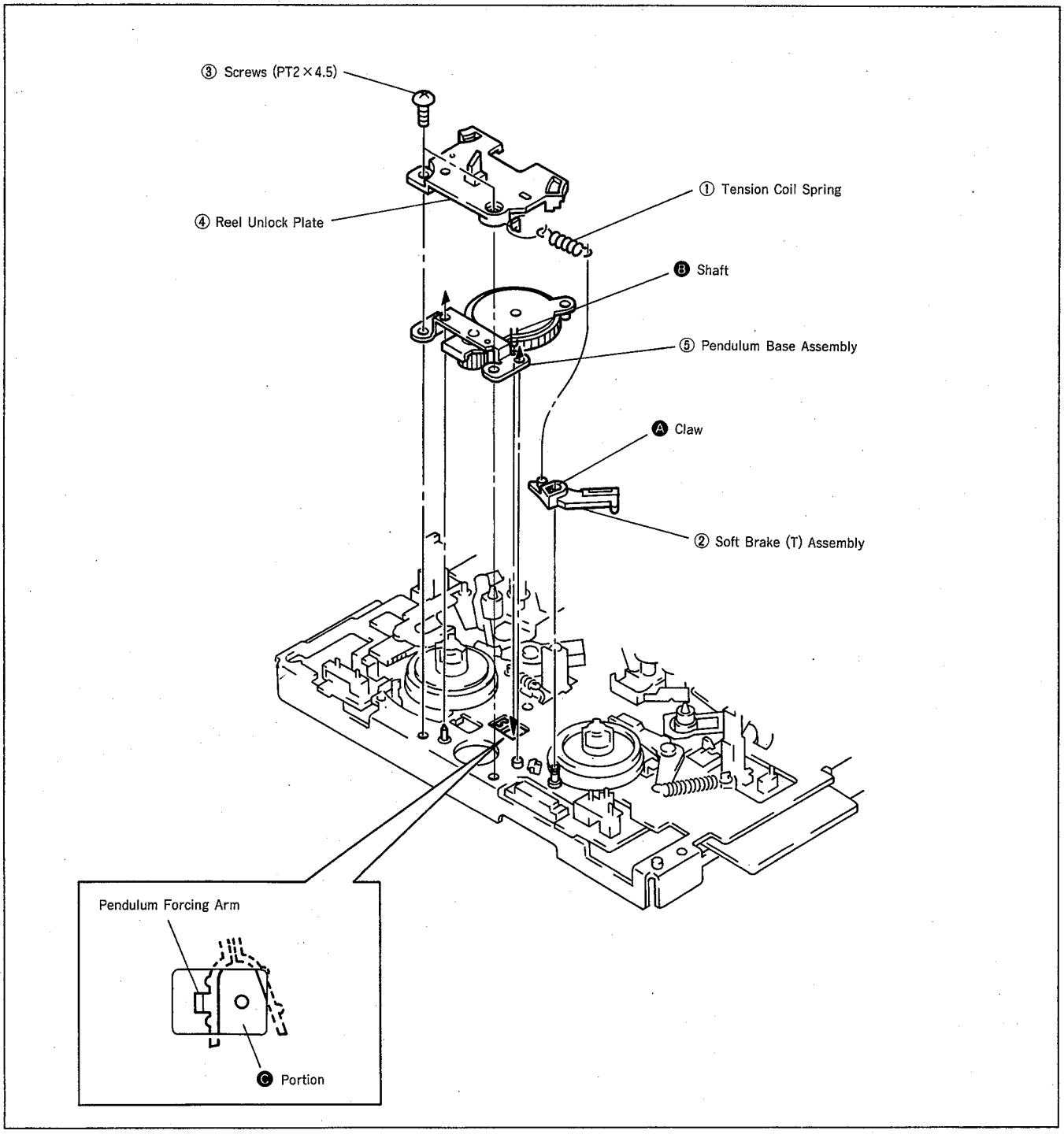

Fig. 10

4-5. BRAKE (S) ARM AND BRAKE (T) ARM ASSEMBLY (Fig. 11)

1. Removal

1) Referring to 2-1, remove the FL cassette compartment assembly.
2) Remove a tension coil spring ①.
3) Disengage a claw Ⓐ and remove the brake (S) arm ②.
4) Remove a tension coil spring ③.
5) Remove a lock washer 1.5 ④, then the brake (T) arm assembly ⑤.

2. Mounting

1) Mount the brake (T) arm assembly ⑤ with its shaft inserted into a hole Ⓓ in mechanical chassis.
2) Attach a lock washer ④.
3) Attach a tension coil spring ③.
4) Insert the shaft Ⓔ of brake (S) arm ② into a groove Ⓕ of slide plate, and the shaft Ⓖ of brake (S) drive lever into a hole Ⓗ in brake (S) arm respectively.
5) Attach a tension spring ①.
6) Referring to 2-1, mount the FL cassette compartment assembly.

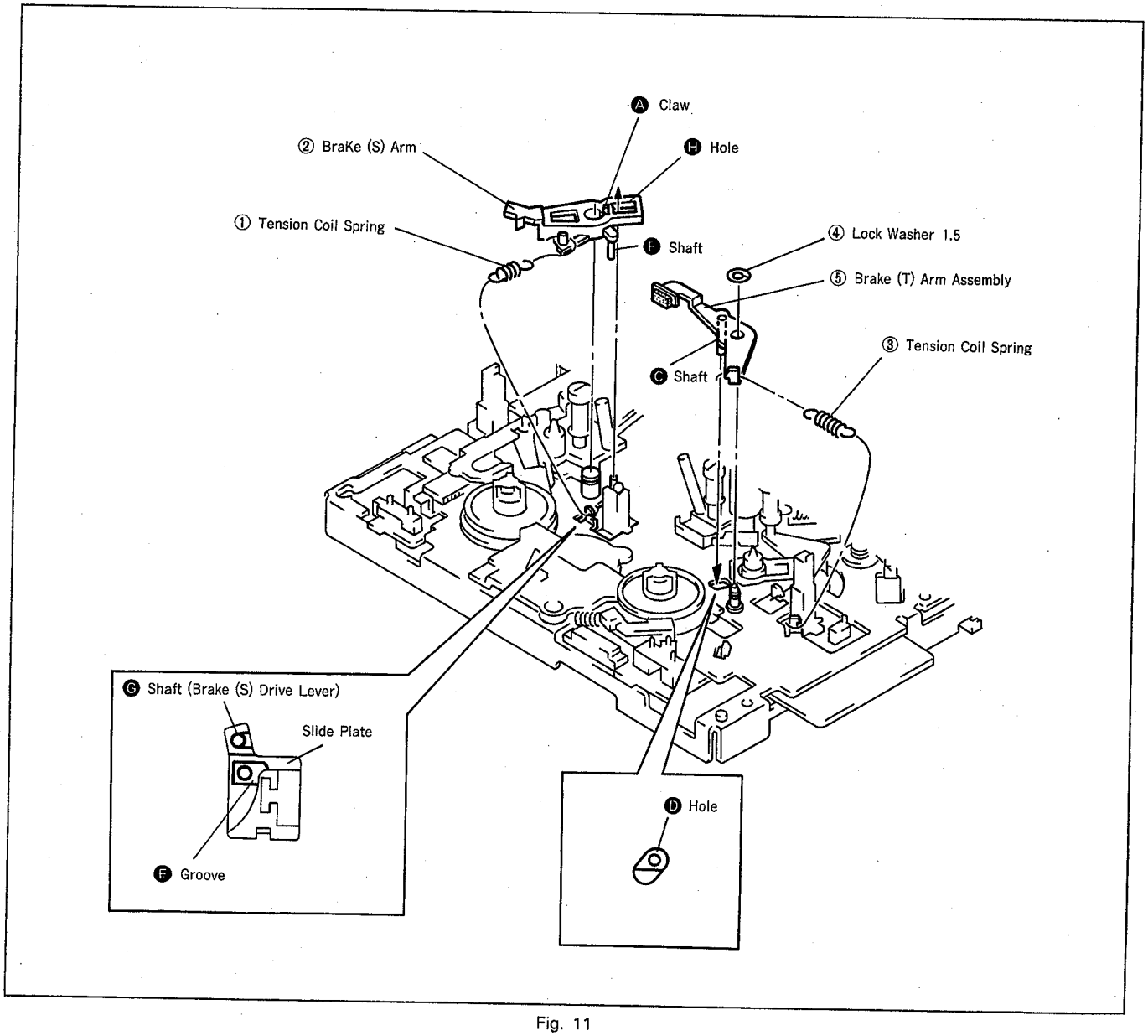

Fig. 11

4-6. TENSION REGULATOR ASSEMBLY, REEL TABLE (S) ASSEMBLY AND REEL TABLE (T) ASSEMBLY (Fig. 12)

1. Removal

1) Referring to 2-1, remove the FL cassette compartment assembly.
2) Referring to 4-5, remove the brake (S) arm and brake (T) arm assembly.
3) Remove a tension coil spring ①.
4) Remove a screw ②, then the tension regulator band assembly ③ and the tension regulator assembly ④.

Note : Do not twist or bend, or do not touch the felt surface when removing the tension regulator band assembly.

5) Remove the reel table (S) assembly ⑤ and the reel table (T) assembly ⑥.

2. Mounting

1) Mount the reel table (S) assembly ⑤ and the reel table (T) assembly ⑥.
2) Mount the tension regulator assembly ④ with its shafts Ⓐ, Ⓑ inserted into holes Ⓒ, Ⓓ in chassis respectively.
3) Wind the tension regulator band assembly ③ onto the reel table (S) assembly ⑤.

Note : Do not twist or bend, or do not touch the felt surface when mounting the tension regulator band assembly.

4) Mount the tension regulator band assembly ③, meeting with the dowels Ⓔ of the chassis.
5) Tighten a screw ②.
6) Attach a tension coil spring ①.
7) Referring to 4-5, mount the brake (S) arm and the brake (T) arm assembly.
8) Referring to 2-1, mount the FL cassette compartment assembly.
9) Referring to 4-23, adjust the tension regulator position.
10) Referring to 4-24, adjust the FWD back tension.

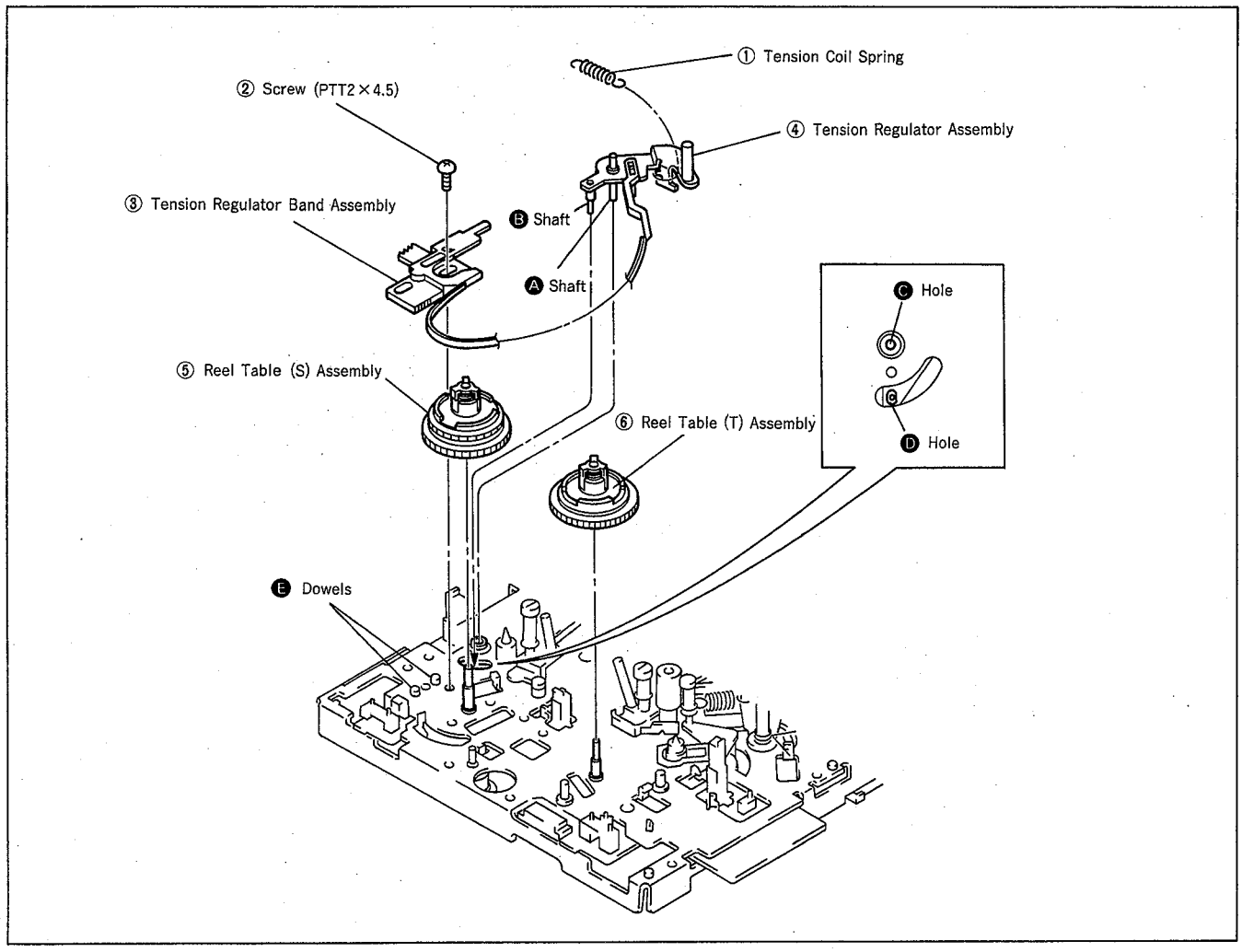

Fig. 12

4-7. TG2 ASSEMBLY (Fig. 13)

1. Removal

1) Remove the TG2 upper flange ①.
2) Remove the TG2 roller ②, TG2 sleeve ③, TG2 lower flange ④ and compression coil spring ⑤.

2. Mounting

1) Mount the compression coil spring ⑤, TG2 lower flange ④, TG2 sleeve ③ and TG2 roller ②.
2) Rotate the TG2 upper flange ① by 4 to 6 turns to fix on the shaft.

3. Presetting of TG2 Height

1) Rotate to adjust the TG2 upper flange ① so that the height from top surface of mechanical chassis to top surface of TG2 upper flange is 22.12mm.

Note : After mounting, perform 5. Tape Path Adjustment.

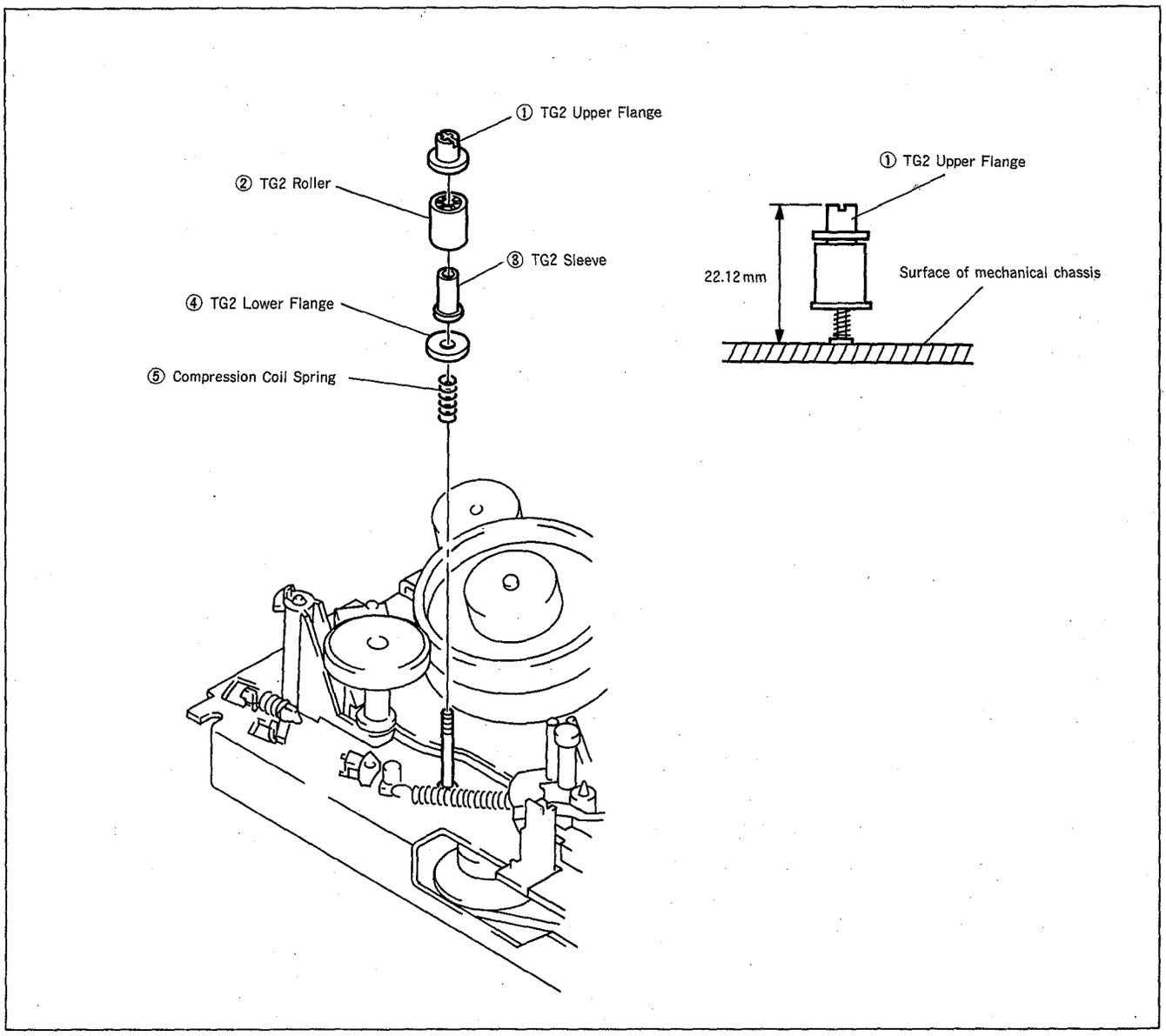

Fig. 13

4-8. TG7 ARM ASSEMBLY (Fig.14)

1. Removal

1) Referring to 2-1, remove the FL cassette compartment assembly.
2) Remove the TG7 height adjusting screw ①, then the TG7 spacer ② and reel table thrust washer ③.
3) Remove the TG7 arm assembly ④ and a torsion coil spring ⑤.

2. Mounting

1) Insert the shaft Ⓐ of TG7 arm assembly ④ into a groove Ⓑ in TG7 drive lever, and attach a torsion coil spring ⑤ as shown below.
2) Mount a reel table thrust washer ③ and a TG7 spacer ②, and tighten tentatively the TG7 height adjusting screw.
   At this time, the height from mechanical chassis top surface to TG7 arm top surface should be 3.3mm.
3) Referring to 2-1, mount the FL cassette compartment assembly.

Note : After mounting, perform 5. Tape Path Adjustment.

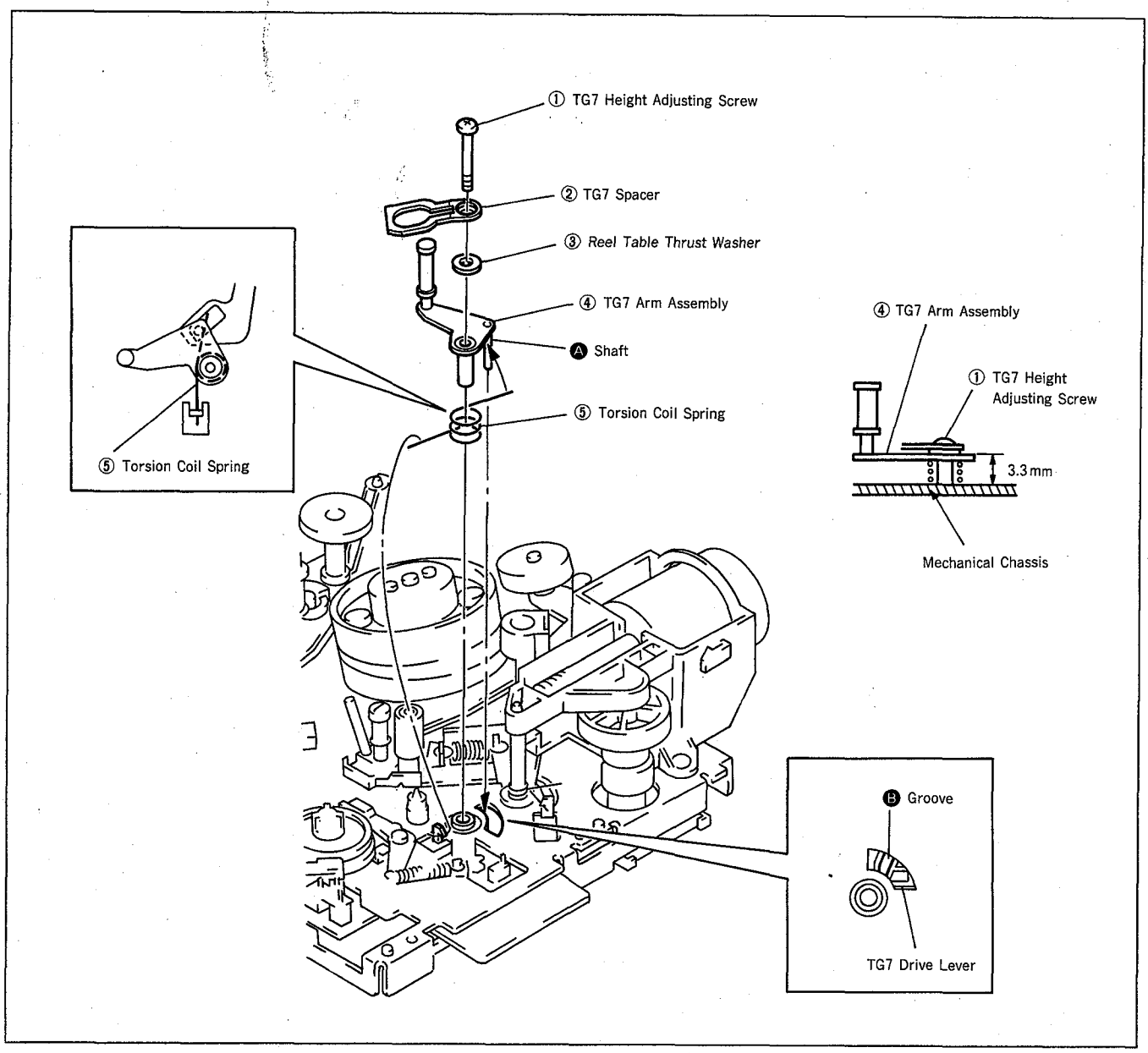

Fig. 14

4-9. CAM MOTOR ASSEMBLY (Fig. 15)

1. Removal

1) Referring to 4-1, remove the RP block.
2) Remove a screw ①.
3) Disengage a claw Ⓐ and remove the cam motor assembly ② in the arrow direction.

2. Mounting

1) Mount the cam motor assembly ② with its hole Ⓒ inserted into the shaft Ⓑ of chassis.
2) Tighten a screw ①.
3) Referring to 4-1, mount the RP block.

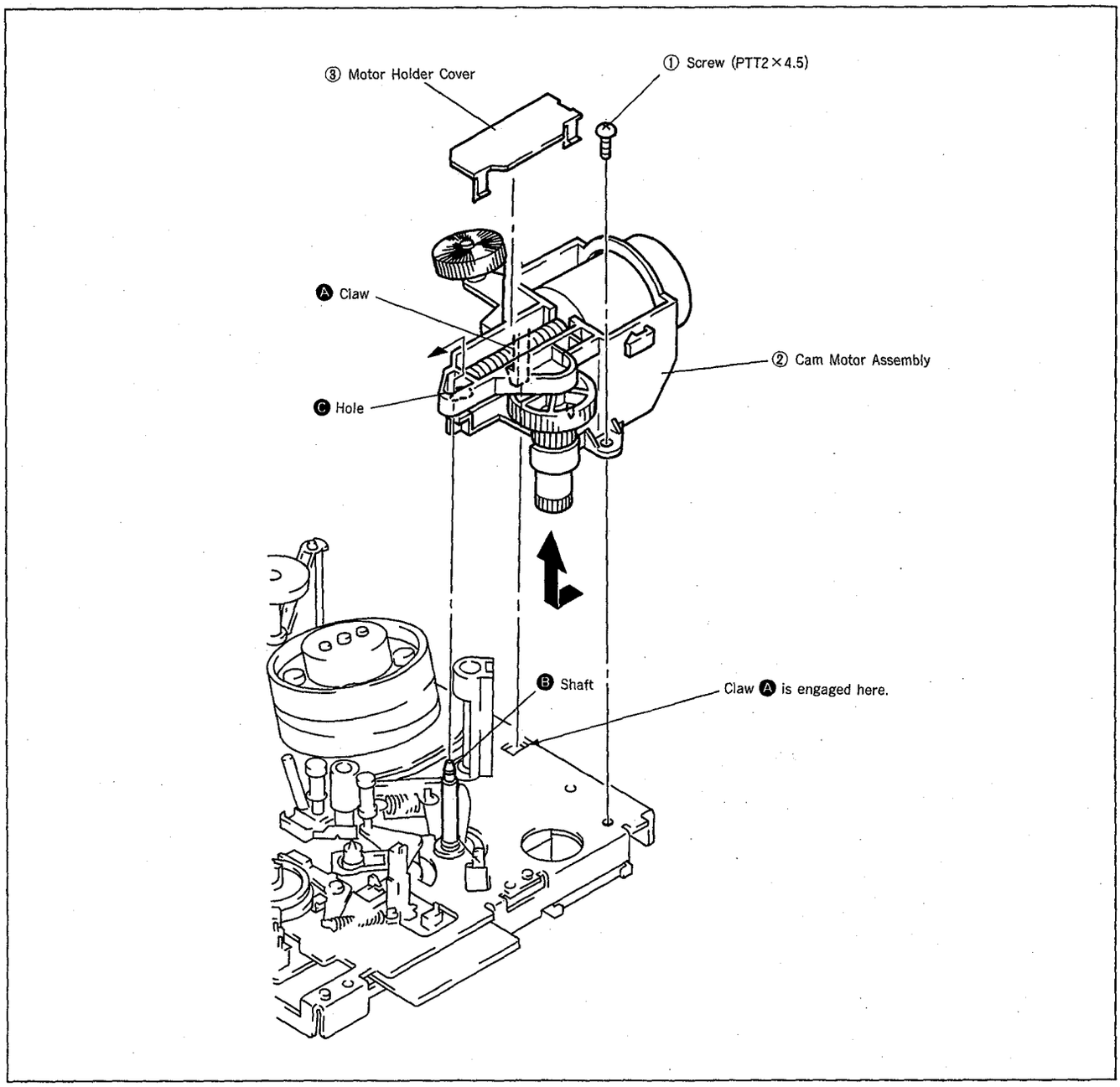

Fig. 15

4-10. PINCH ARM ASSEMBLY (Fig. 16)

1. Removal

1) Referring to 2-1, remove the FL cassette compartment assembly.
2) Execute the loading until the pinch arm assembly ② becomes level.
3) Referring to 4-9, remove the cam motor assembly.
4) Remove a torsion coil spring ①, then the pinch arm assembly ②.

2. Mounting

1) Mount the pinch arm assembly ② with its hole Ⓐ inserted into the claw Ⓑ of pinch drive lever on the chassis.
2) Attach a torsion coil spring ① as shown below.
3) Referring to 4-9, mount the cam motor assembly.
4) Referring to 2-1, mount the FL cassette compartment assembly.

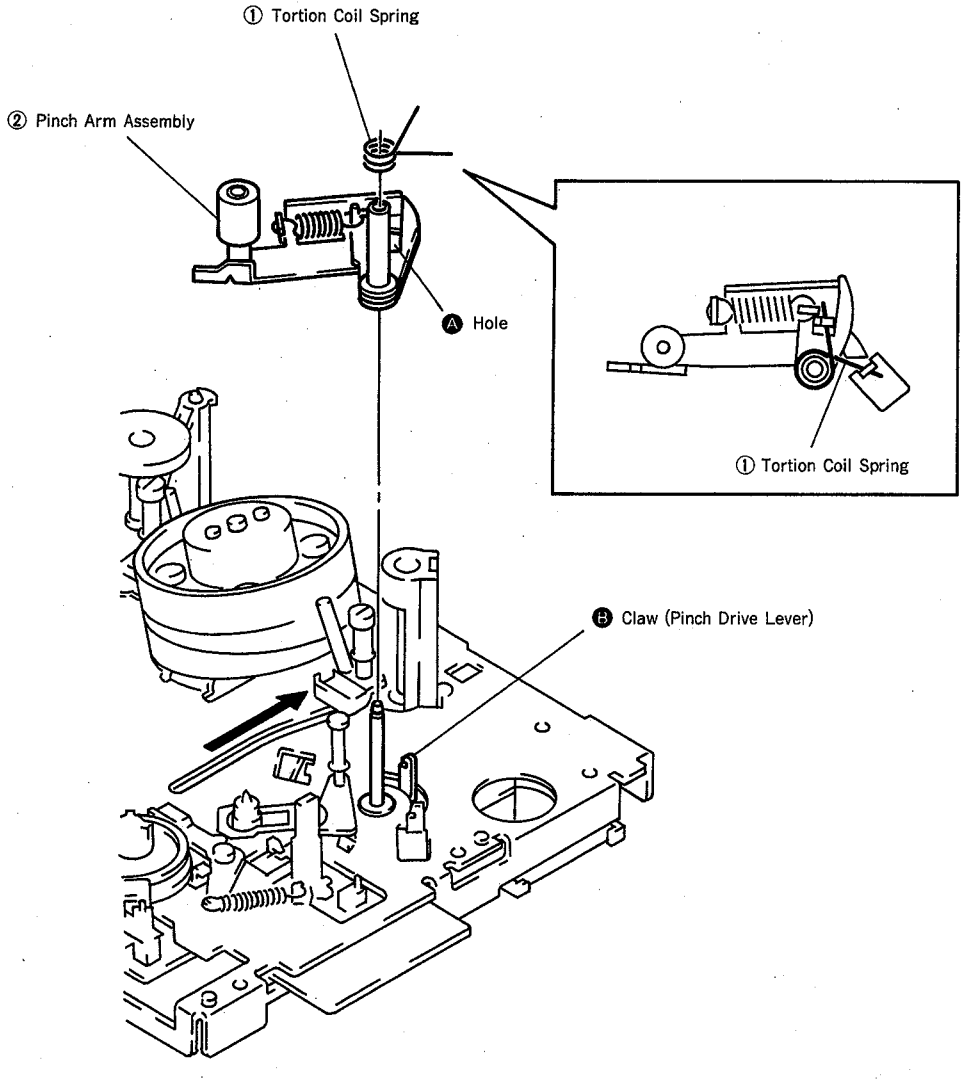

Fig. 16

4-11. WORM WHEEL BRACKET (Fig. 17)

1. Removal

1) Remove a screw ①, then the shaft earth assembly ②.
2) Remove a screw ③, then the worm wheel bracket ④ in the arrow direction.

2. Mounting

1) Mount the worm wheel bracket ④ with its hole Ⓑ inserted into the shaft Ⓐ of mechanical chassis.
2) Tighten a screw ③.
3) Mount the shaft earth assembly ② and tighten a screw ①.

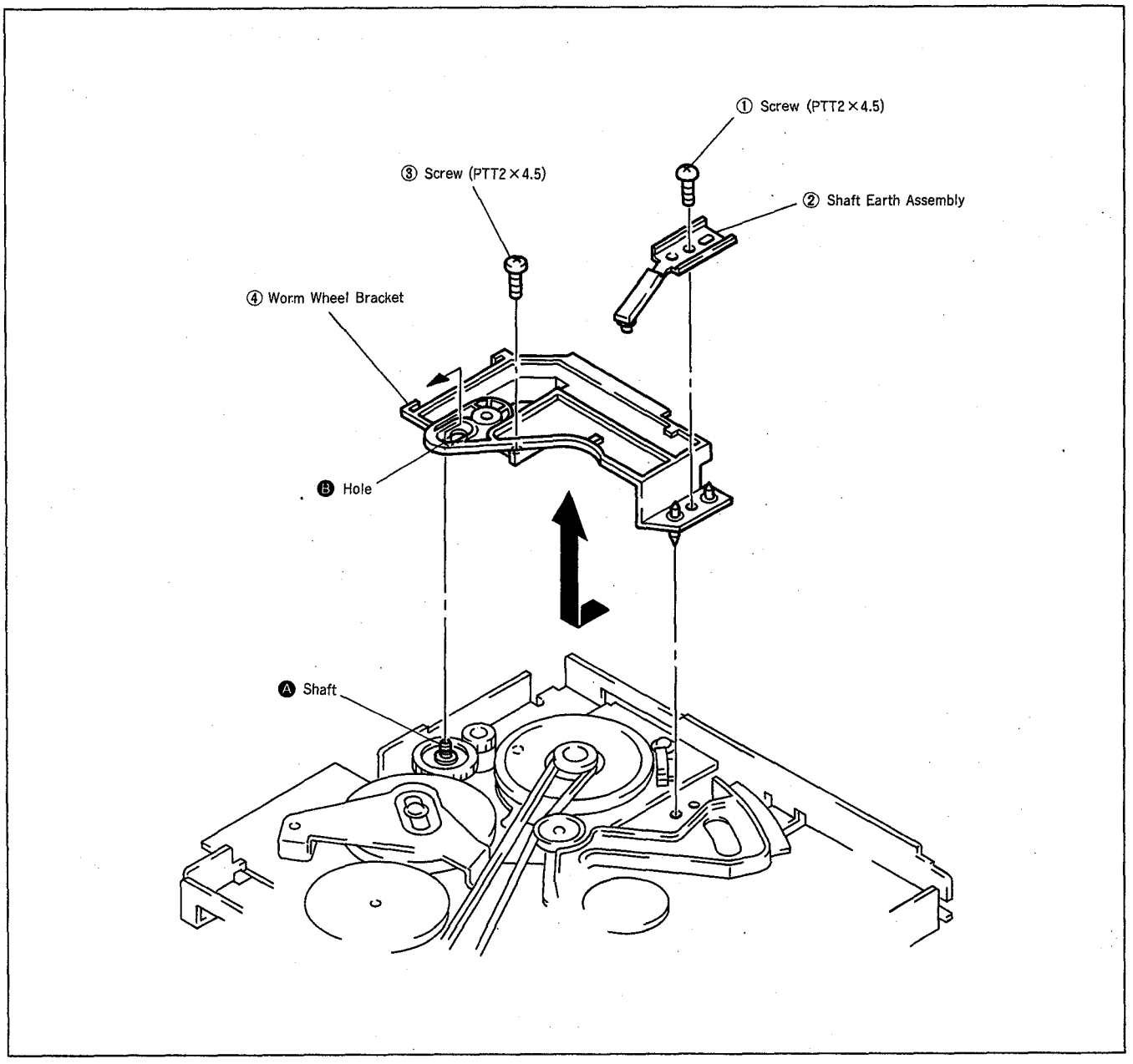

Fig. 17

4-12. CAPSTAN MOTOR (Fig. 18)

1. Removal

1) Referring to 4-11, remove the worm wheel bracket.
2) Disengage the timing belt ①.
3) Remove a screw ②, then the capstan motor ③.

2. Mounting

1) Mount the capstan motor ③ with its dowels Ⓑ inserted into holes Ⓐ in the mechanical chassis at two places.

Note : Do not touch the capstan motor shaft, oil seal and rotor.

2) Tighten a screw ②.
3) Engage the timing belt ①.
4) Referring to 4-11, mount the worm wheel bracket.

Note : After mounting, perform 5. Tape Path Adjustment.

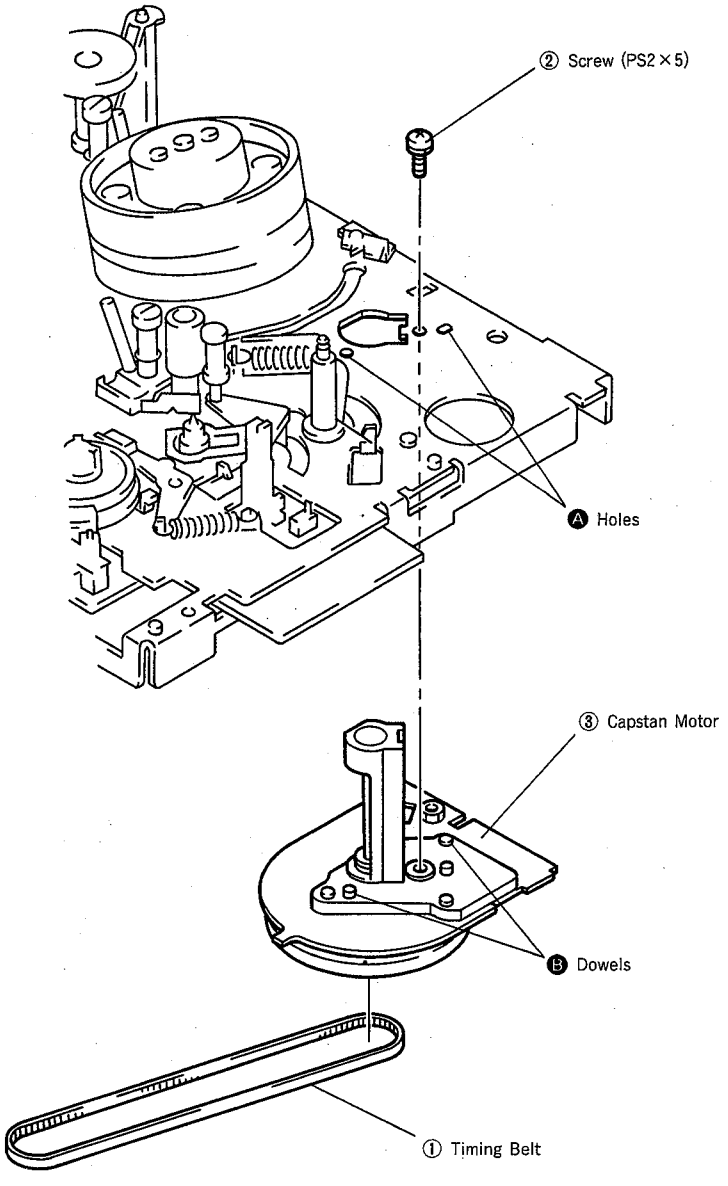

Fig. 18

4-13. DRUM ASSEMBLY (Fig. 19)

1. Removal

1) Referring to 4-1. RP Block, disconnect the connector for drum.
2) Remove three screws (M2x5) ①.
3) Remove the drum assembly ②.

Note : Do not touch the outer surface of drum; hold portions (A) and (B) of drum.

2. Mounting

1) Mount the drum ② while aligning with dowels Ⓐ of chassis at two places.

Note : Do not touch the outer surface of drum; hold portions (A) and (B) of drum.

2) Tighten three screws (M2x5) ①.
   2)-1 Tighten a screw ⓐ to the torque 29.42mN·m (300g·cm).
   2)-2 Tighten a screw ⓑ to the torque 29.42mN·m (300g·cm), then return 45°. (Apply a screw locking agent.)
   2)-3 Tighten a screw ⓒ to the torque 29.42mN·m (300g·cm), then return 45°. (Apply a screw locking agent.)

Note : After mounting, perform 5. Tape Path Adjustment.

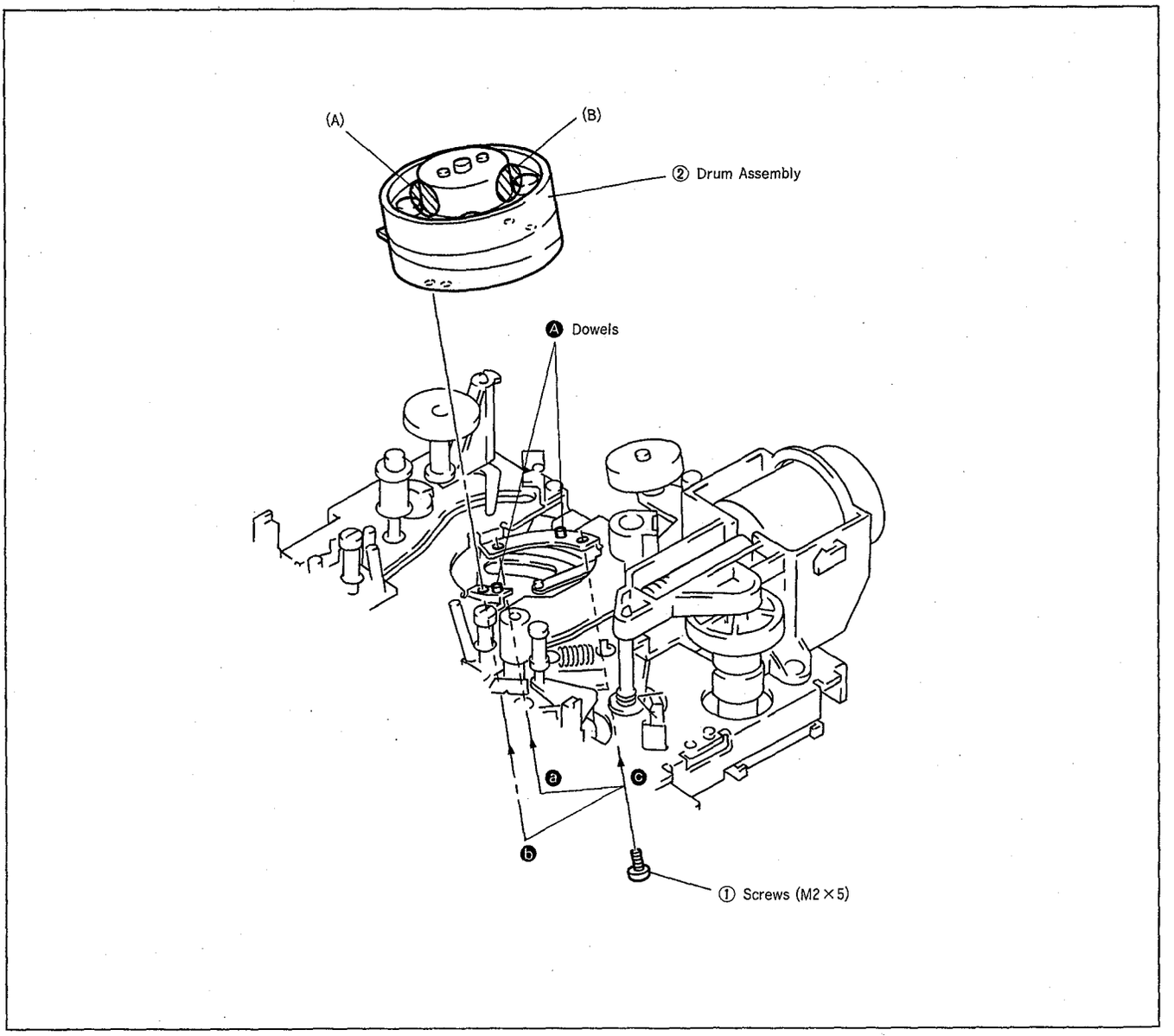

Fig. 19

4-14. PULLEY BASE ASSEMBLY (Fig. 20)

1. Removal

1) Remove a screw ①, then the W2, middle ②.
2) Disengage a claw Ⓐ and remove the pulley base assembly ③.

2. Mounting

1) Mount the pulley base assembly ③ on the shaft Ⓓ of mechanical chassis, and engage the timing belt Ⓒ with the pulley Ⓑ.
2) Mount the W2, middle ② and tighten tentatively the screw ①.
3) Tighten the screw ① at the position where the portion (A) of pulley base assembly ③ is pushed with 14g force.

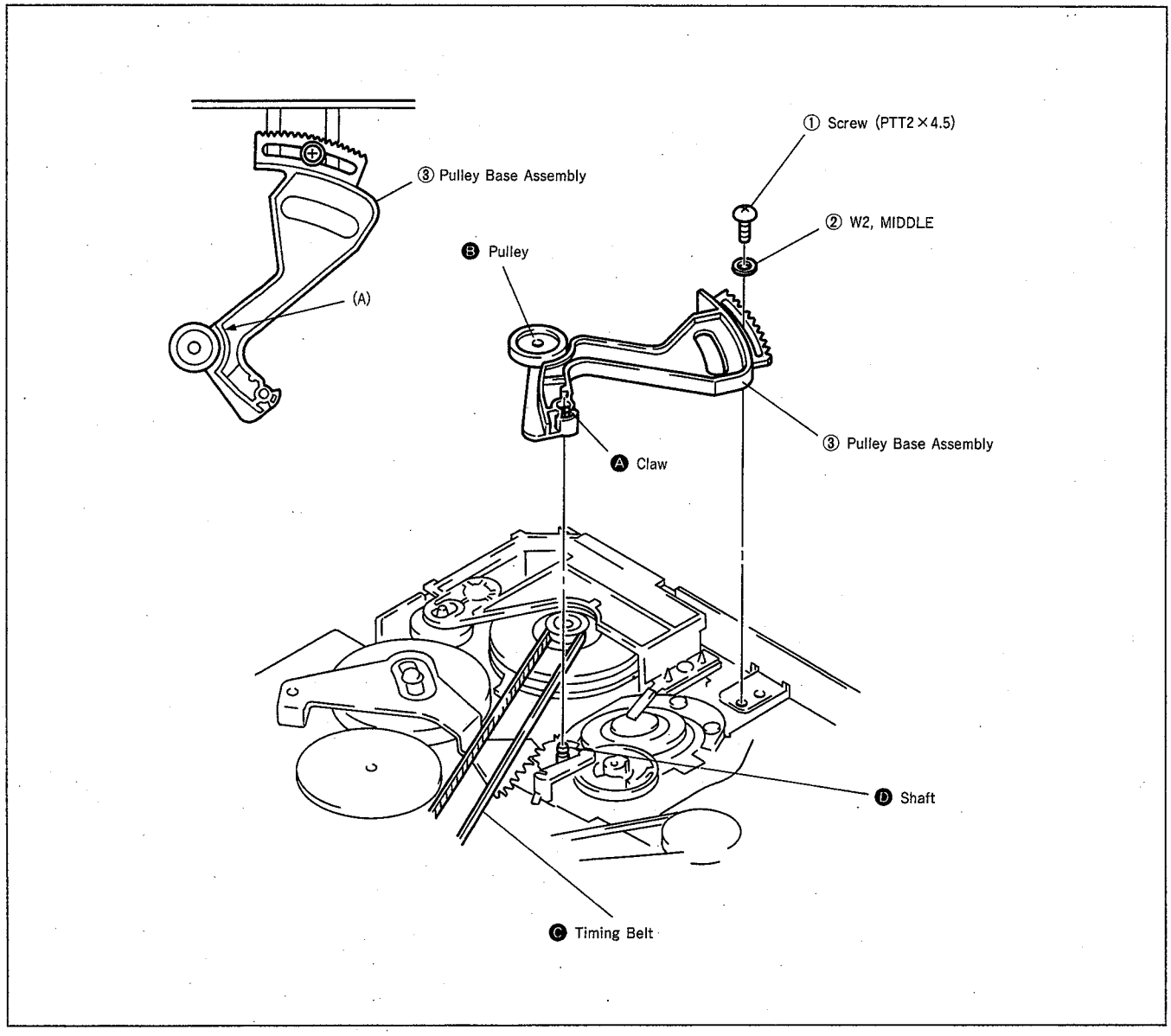

Fig. 20

4-15. LOADING DRIVE LEVER (Fig. 21)

1. Removal

1) Disengage the timing belt ①.
2) Remove a screw ②, then the W3, small ③.
3) Remove the loading drive lever ④.

2. Mounting

1) Mount the loading drive lever ④ on the shaft Ⓐ of chassis with its shaft Ⓓ inserted into the loading roller ⑤.
   At this time, insert the shaft Ⓑ of main cam into the hole Ⓒ in loading drive lever, the shaft Ⓓ of loading drive lever into a slot Ⓔ in main cam, and align a line Ⓕ on loading drive lever with a line Ⓖ on loading gear (T) respectively.
2) Mount the W3, small ③ and tighten tentatively the screw ②.
3) Engage the timing belt ①.

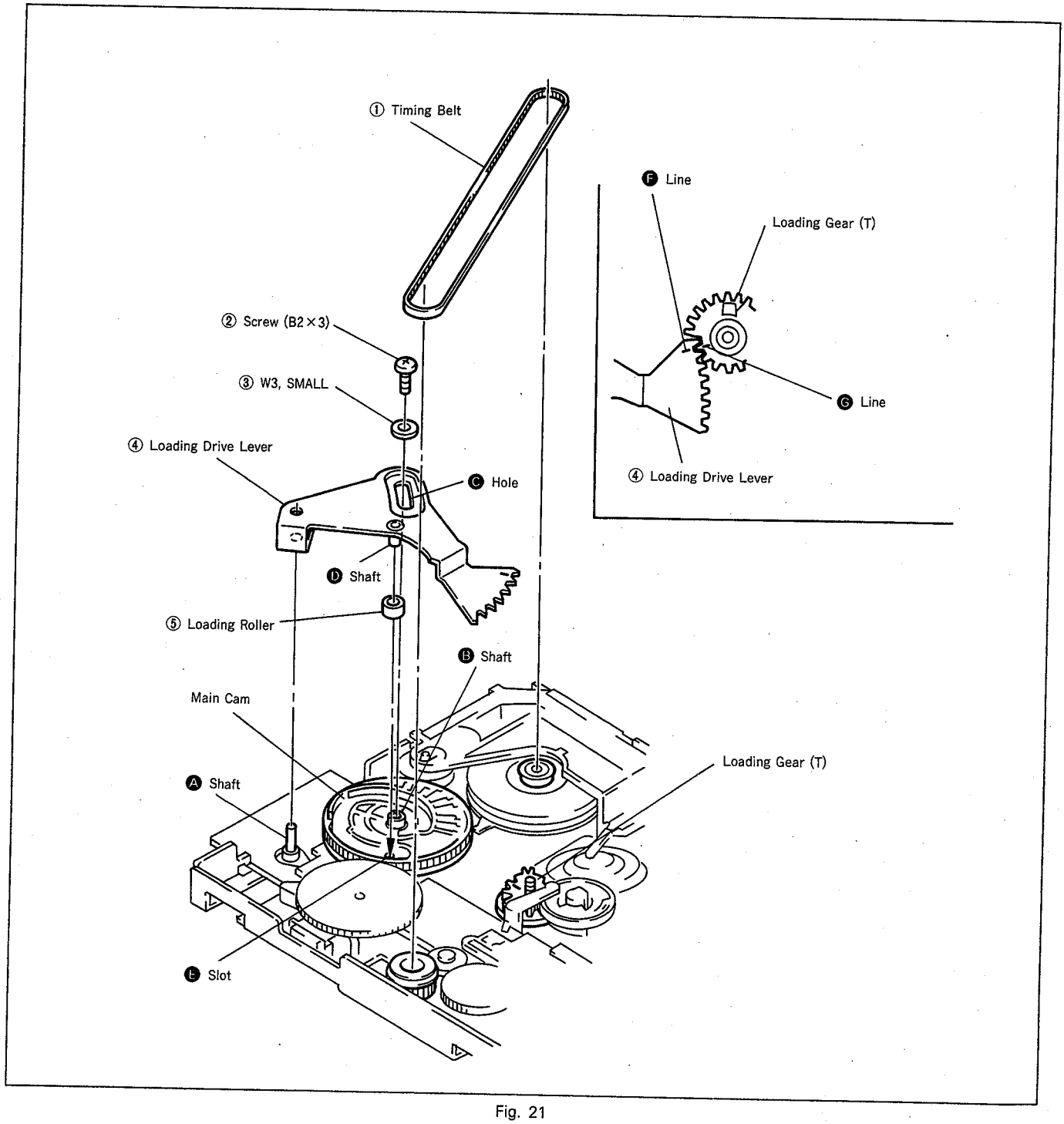

Fig. 21

4-16. ROTARY SWITCH AND MAIN CAM (Fig. 22)

1. Removal

1) Referring to 4-11, remove the worm wheel bracket.
2) Referring to 4-15, remove the loading drive lever.
3) Remove the cam relay gear ①.
4) Disengage claws Ⓐ at two places, and disconnect the rotary switch ② from the connector Ⓑ.
5) Remove the main cam ③.

2. Mounting

1) Mount the main cam ③ with its cam groove Ⓒ inserted into the shaft Ⓓ of slide plate drive lever, and cam groove Ⓔ into the shaft Ⓕ of pinch drive lever respectively.
2) Referring to 4-15, mount the loading drive lever.
3) Mount the cam relay gear ①.
4) Referring to 4-11, mount the worm wheel bracket.
5) Connect the rotary switch ② to the connector Ⓑ while aligning ▲ marks each other, and its recess Ⓗ with the recess Ⓖ of main cam ③.

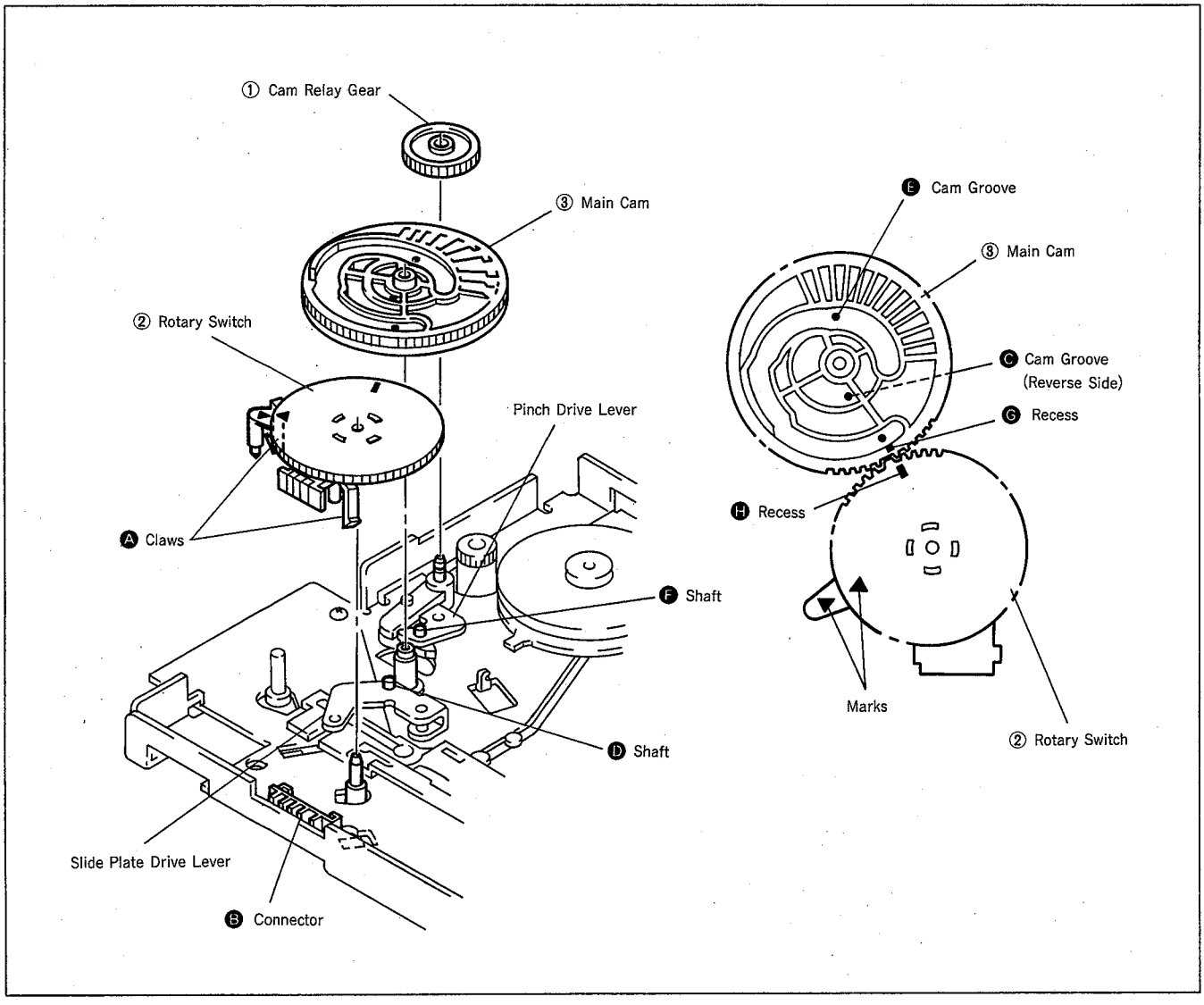

Fig. 22

4-17. SLIDE PLATE (Fig. 23)

1. Removal

1) Referring to 4-11, remove the worm wheel bracket.
2) Referring to 4-15, remove the loading drive lever.
3) Referring to 4-16, remove the rotary switch and main cam.
4) Remove the slide plate drive lever ①.
5) Disengage the timing belt ②.
6) Disengage a claw Ⓐ and remove the FL pulley gear (drive) ③.
7) Remove a tension coil spring ④, then the FL switching arm assembly ⑤.
8) Remove the brake (S) drive lever ⑧.
9) Remove two lock washers 1.5 ⑥, then the slide plate ⑦.

2. Mounting

1) Mount the slide plate ⑦ with its groove Ⓑ inserted into the shaft Ⓒ of chassis, the groove Ⓓ into the shaft Ⓔ of S take-up assembly, and the groove Ⓕ into the shaft Ⓖ respectively.
At this time, insert the shaft Ⓗ into the groove Ⓚ in slide plate while holding the tension regulator sub-arm toward the arrow.
2) Mount two lock washers 1.5 ⑥.
3) Referring to 3) of Mounting in 4-18, mount the brake (S) drive lever ⑧.
4) Mount the FL switching arm assembly ⑤ and a tension coil spring (4).
5) Mount the FL pulley gear (drive) ③ and engage the timing belt ②.
6) Mount the slide plate drive lever ① with its shaft Ⓜ inserted into a groove Ⓞ in slide plate ⑦, and its hole into the shaft Ⓟ of chassis.
7) Referring to 4-16, mount the rotary switch and main cam.
8) Referring to 4-15, mount the loading drive lever.
9) Referring to 4-11, mount the worm wheel bracket.

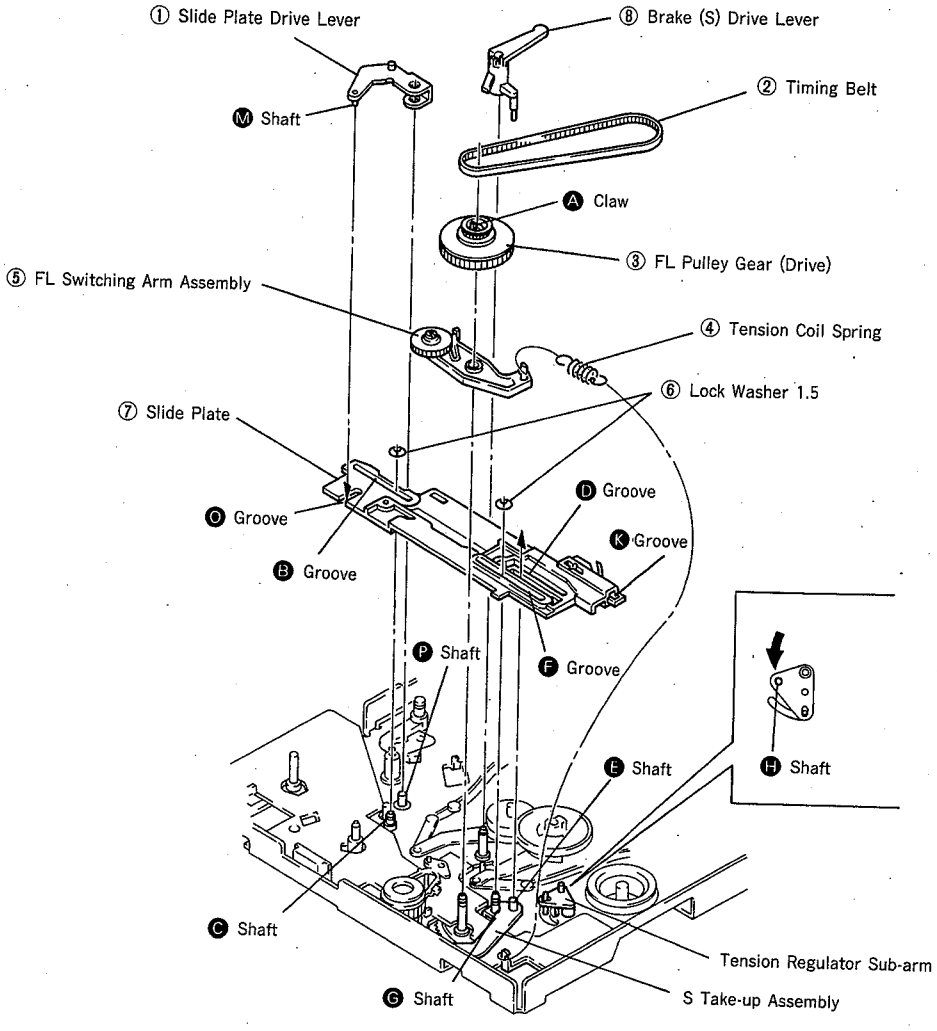

Fig. 23

4-18. LOADING GEAR (S) ASSEMBLY (Fig. 24)

1. Removal

1) Referring to 4-15, remove the loading drive lever.
2) Disengage a claw Ⓐ and remove the brake (S) drive lever ①.
3) Remove the coaster leaf spring ②.
4) Disengage a claw Ⓑ and remove the loading gear (S) assembly ③.

2. Mounting

1) Mount the loading gear (S) assembly ③ on the shaft Ⓒ of chassis with its arm engaged with the shaft Ⓓ of coaster.
   At this time, align the portion Ⓔ of loading gear (T) assembly with the portion Ⓕ of loading gear (S) assembly.
2) Mount the coaster leaf spring ②.
3) Mount the brake (S) drive lever ① on the shaft Ⓜ of chassis with its shaft Ⓙ inserted into the portion Ⓖ of brake (S) arm, and the shaft Ⓗ into the groove Ⓚ in loading gear (S) assembly ③.
4) Referring to 4-15, mount the loading drive lever.

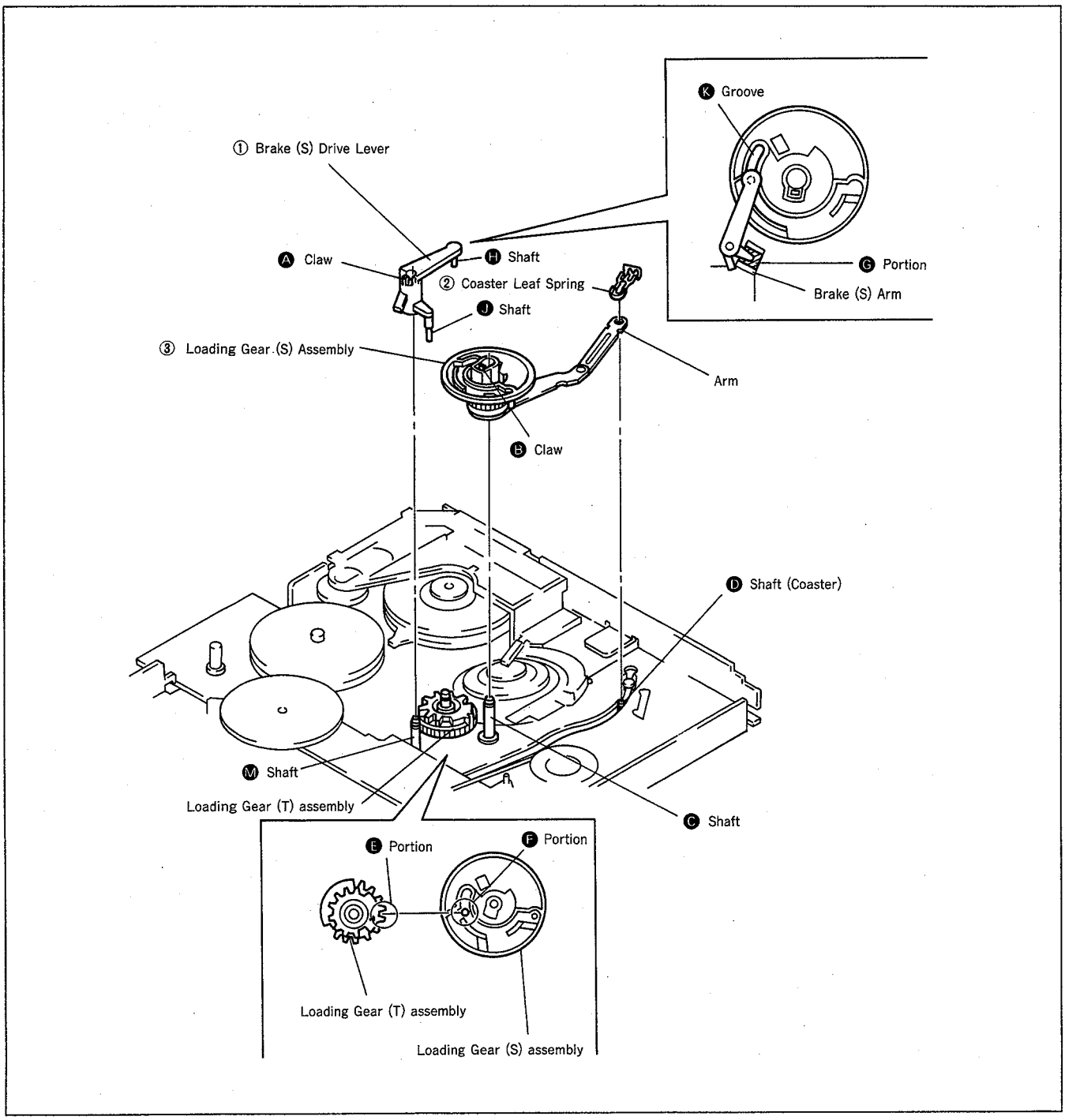

Fig. 24

4-19. LOADING GEAR (T) ASSEMBLY (Fig. 25)

1. Removal

1) Referring to 4-15, remove the loading drive lever.
2) Referring to 4-18, remove the loading gear (S) assembly.
3) Remove the coaster leaf spring ①, then the loading gear (T) assembly ②.

2. Mounting

1) Mount the loading gear (T) assembly ② on the shaft Ⓐ of chassis with its arm engaged with the shaft Ⓑ of coaster.
2) Mount the coaster leaf spring ①.
3) Referring to 4-18, mount the loading gear (S) assembly.
4) Referring to 4-15, remove the loading drive lever.

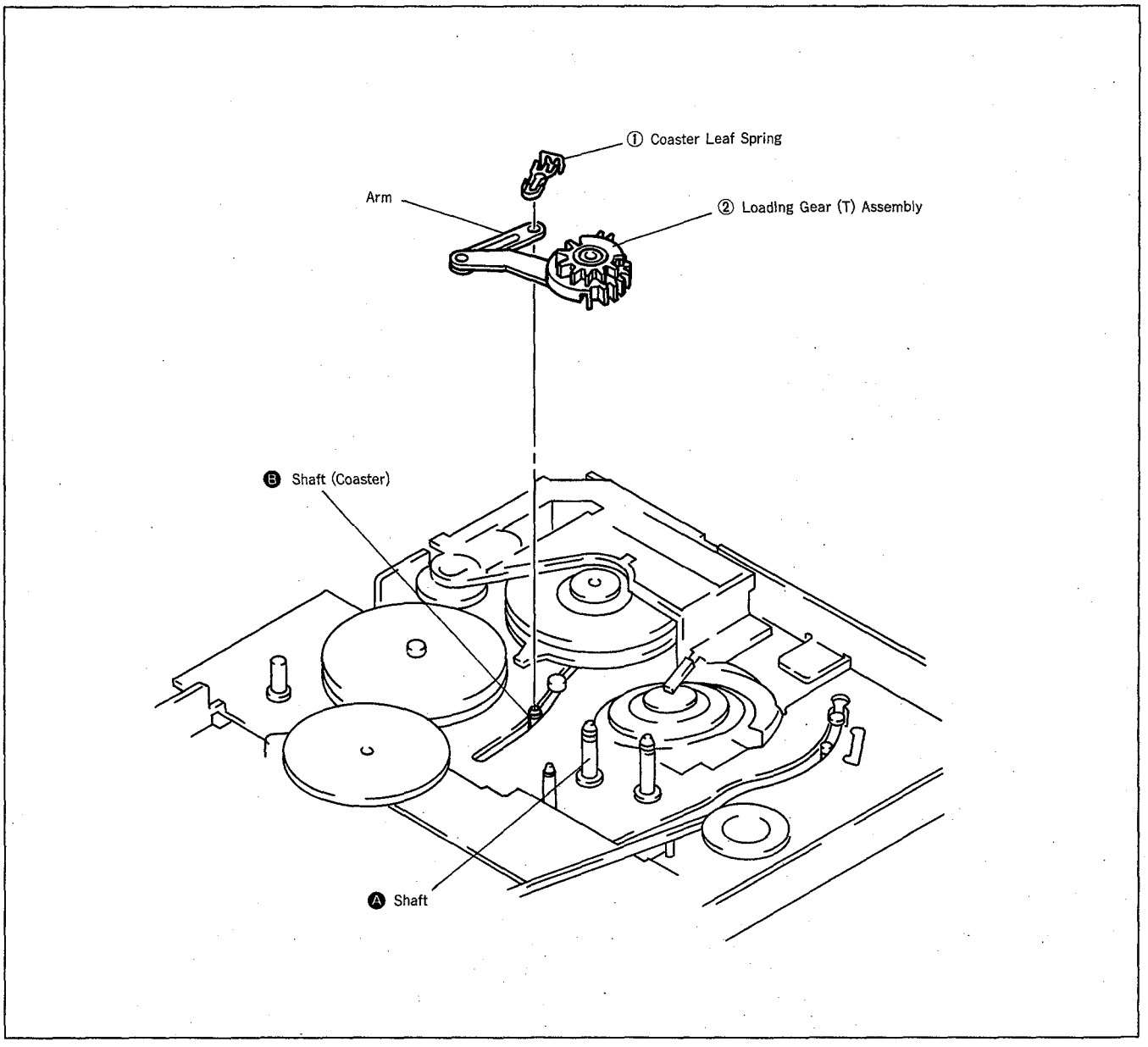

Fig. 25

4-20. COASTER (S) (Fig. 26)

1. Removal

1) Referring to 4-2, remove the impedance roller assembly.
2) Remove a screw ①, then the catcher (S) ②.
3) Remove the coaster leaf spring ③, then the coaster (S) ④.

2. Mounting

1) Mount the coaster (S) ④.
2) Mount the catcher (S) ② with its holes inserted into dowels Ⓐ of chassis at two places.
3) Tighten a screw ①.
4) Referring to 4-18 Loading Gear (S) Assembly, mount the coaster leaf spring ③.
5) Referring to 4-2, mount the impedance roller assembly.

4-21. COASTER (T) (Fig. 27)

1. Removal

1) Remove a screw ①, then the catcher (T) ②.
2) Remove the coaster leaf spring ③, then the coaster (T) ④.

2. Mounting

1) Mount the coaster (T) ④.
2) Mount the catcher (T) ② with its holes inserted into dowels Ⓐ of chassis at two places.
3) Referring to 4-19 Loading Gear (T) Assembly, mount the coaster leaf spring ③.

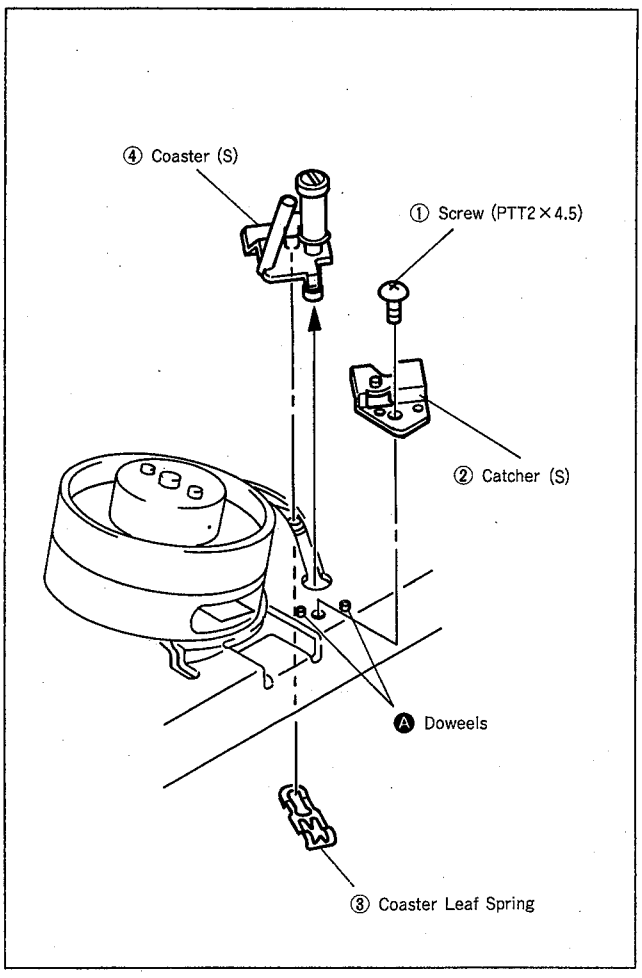

Fig. 26

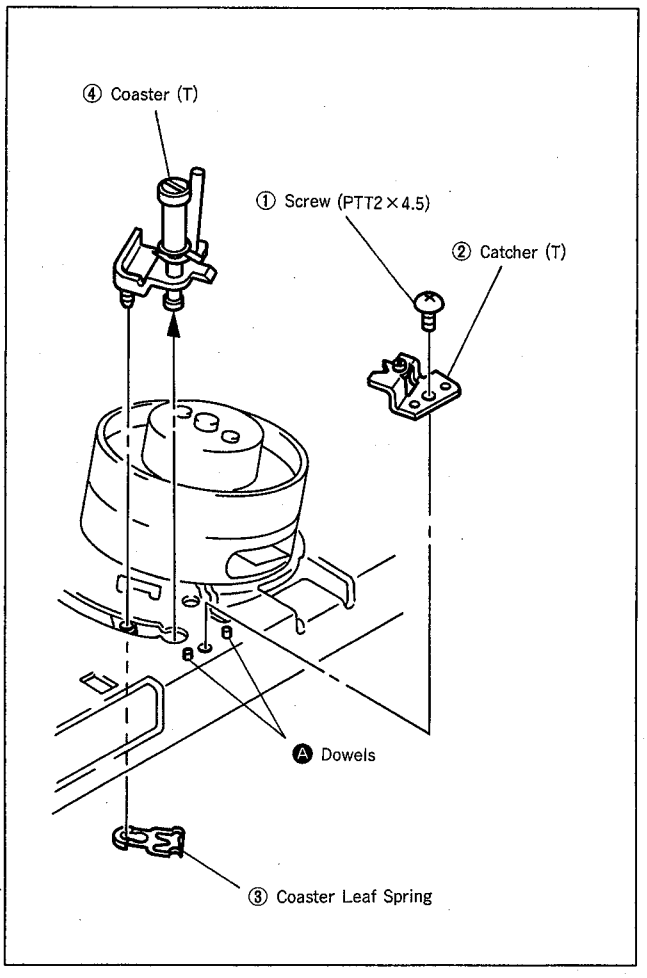

Fig. 27

4-22. ROTARY UPPER DRUM REPLACEMENT

1. Removoal

• If possible, make a recording before removal.

1) Remove the two screws ① (Fig. 28).
2) Mount the jig ② (Ref. No. J-8) with the two supplied screws ③, then screw the attached hexagon socket screws ④ to the jig ②. The rotary upper drum ⑤ will move upward and come off (Fig. 29).

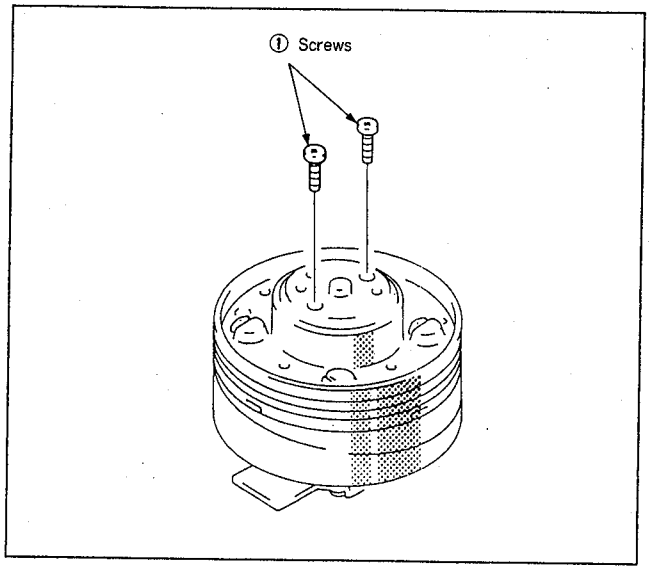

Fig. 28

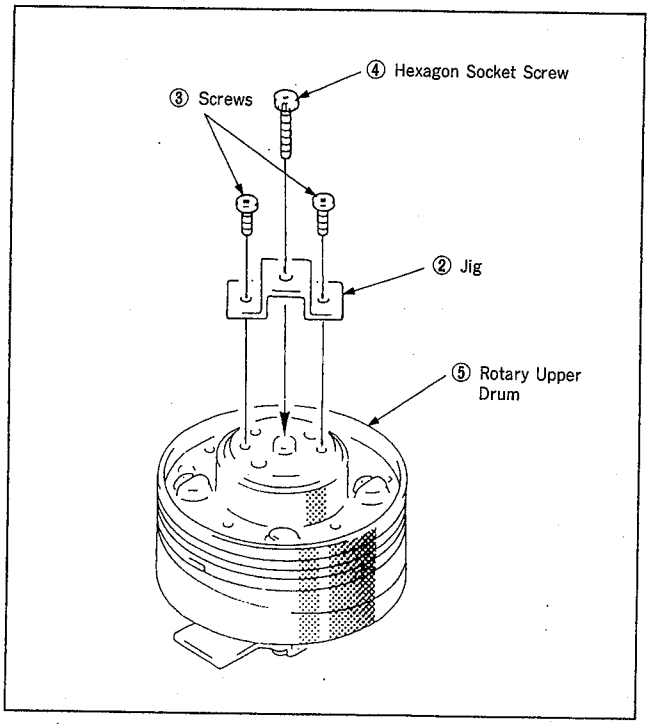

Fig. 29

2. Installation

1) Wipe clean the flange surface and the rotary upper drum ⑤ surface that makes contact with it, and confirm that they are free from dirt and scratches.
2) Insert the jig ⑥ (Ref. No. J-8) into the drum positioining hole, then set then set the rotary upper drum ⑤ by passing the jig through its positioning hole ⑦. (Fig.30)
3) Remove the jig ⑥ and push down the rotary upper drum ⑤ gently by hand. If it does not go all the way down, secure it temporarily by tightening the two screws ① alternately (Fig.28).
4) Tighten strongly both two screws ①, and loosen both screws once, then tighten them again (for stable seating).
5) Insert the jig ⑥ into the positioning hole ⑦ again and confirm that it goes in smoothly. If it does not, loosen the two screws ①, repeat step 2) of the Removal paragraph and restart the setting procedure.
6) Tighten the screws ①.

Note : After installing, be sure to perform tape path adjustment as described in section 5.

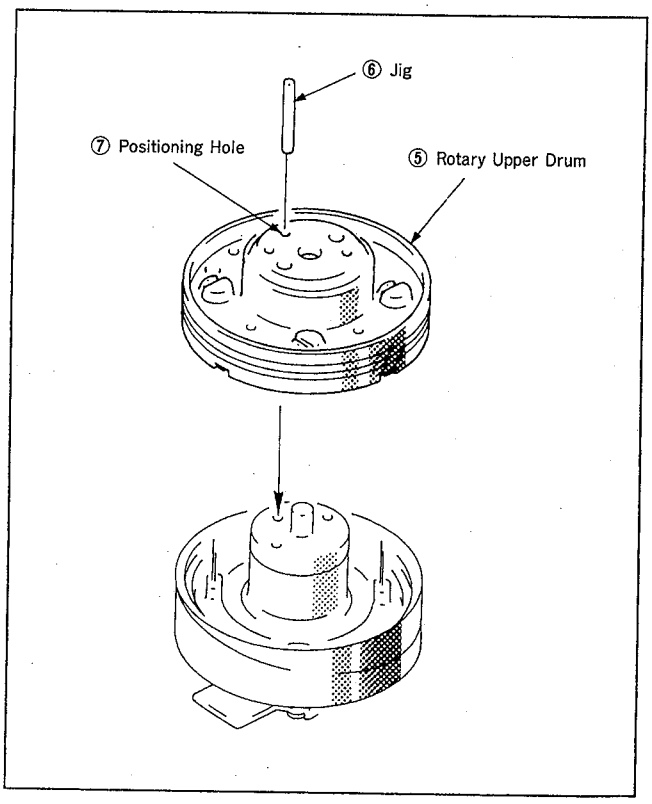

Fig. 30

4-23. ADJUSTMENT OF TENSION REGULATOR POSITION (Fig. 31)

1. Adjustment

1) Set a cassett tape and run the tape in the PB mode.
2) With the tape running, check that the distance from No.1 guide to No. 2 guide upper flange is 5.5 mm. (On the centerline of TG2 guide)
3) If they are not at the specified positions, perform adjustment in step 4) and subsequent steps.
4) Loosen the screw ①.
5) If No.1 guide is located inside the specified position, shift the tension adjusting base toward the arrow Ⓐ using the FWD B.T. adjusting driver (Ref No. J-13). Or, if it is located outside, shift toward the arrow Ⓑ.
6) Tighten the screw ①.

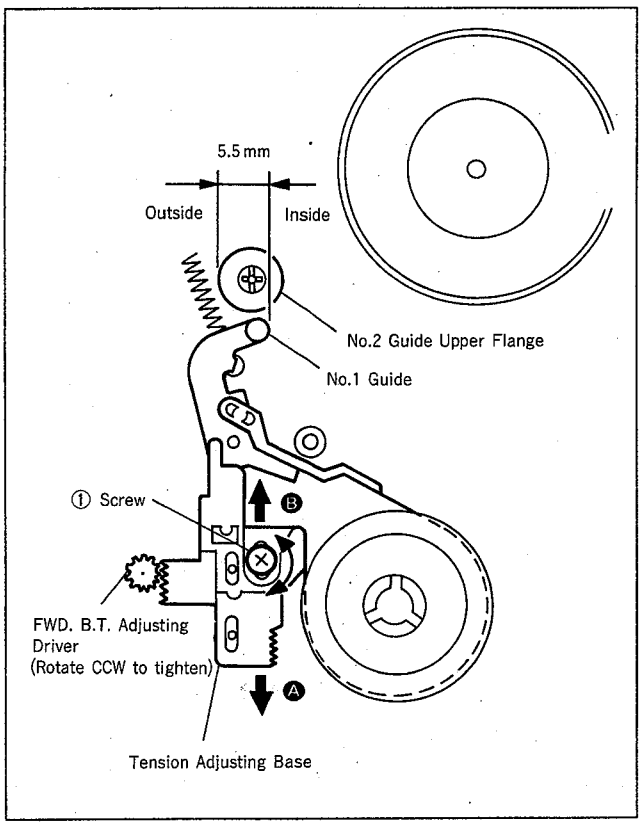

Fig. 31

4-24. FWD BACK TENSION ADJUSTMENT (Fig. 32)

1) Select the TEST mode 1 using the adjusting remote controller (Ref No. J-10).
2) Set the torque cassette (Ref No. J-7).
3) Select the FWD mode, and check that the torque of S reel table is 0.88 ~ 1.17mN·m (9 ~ 12g·cm). If it is out of standard, adjust the tension adjusting arm position.

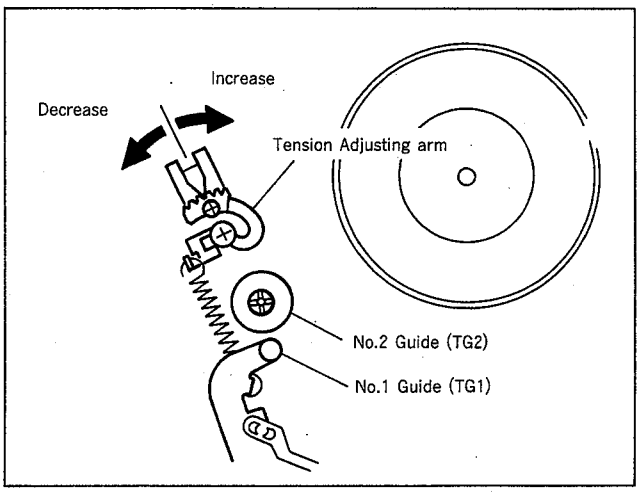

Fig. 32

4-25. REEL TORQUE CHECK

1) Set the torque cassette.
2) Select the FWD mode, and check that the torque fluctuation center of T reel table is 0.98 ~ 1.96mN·m (10 ~ 20g·cm).
3) Select the RVS mode, and check that the torque fluctuation center of S reel table is 1.77 ~ 2.75mN·m (18 ~ 28g·cm).
4) Select the REV mode, and check that the torque of T reeltable is 0.98 ~ 1.96mN·m (10 ~ 20g·cm).
5) If the above data is not satisfied, the tension regulator band, T hard tab or T soft assembly will be faulty. Check them first, and if no abnormality is found, replace respective reel tables.

4-26. FL WORM WHEEL (Fig. 33)

1. Removal

1) Disengage tabs Ⓐ at four places and remove the gear cover ①.
2) Remove the drive gear ②, then the FL worm wheel ③.

2. Mounting

1) Mount the FL worm wheel ③.
2) Meet a hole Ⓑ in drive arm (T) on right side with a hole in chassis, and also a hole Ⓒ in FL worm wheel ③ with a hole in side plate.
   Meet a hole Ⓓ in drive gear ② with a hole in side plate.
   Meeting respective holes, mount the drive gear ②.
3) Mount the gear cover ①.

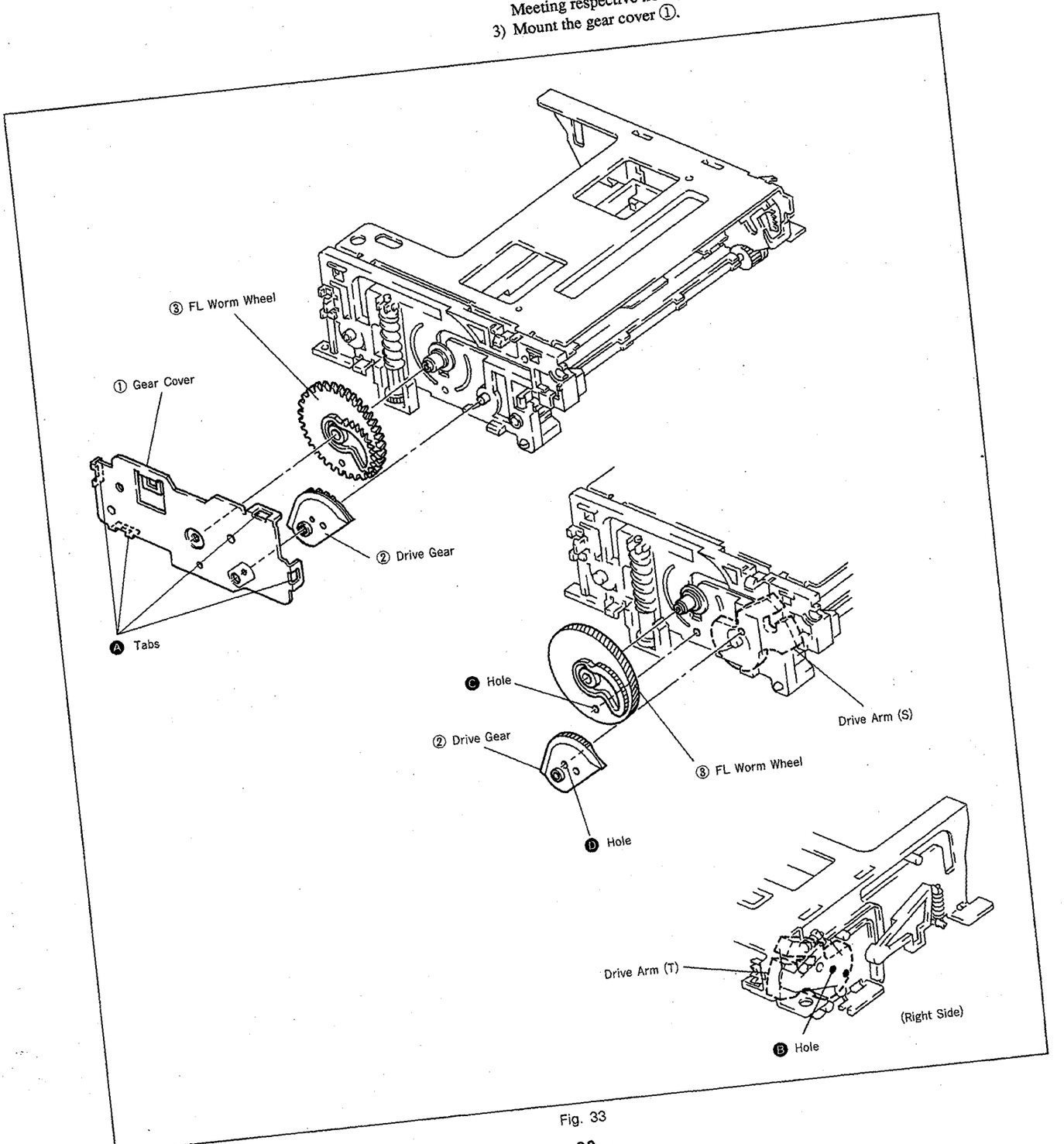

Fig. 33

5. TAPE PATH ADJUSTMENT

The 8mm video system uses ATF (Automatic Track Finding) which instantaneously controls a tape running speed based on 4 types of pilot signals and performs high-precision tracking.
This does away a tracking control knob and allows accurate track tracing.
On the other hand, however, the ATF system has a problem in adjusting the tape path system. That is, if head tracing is out of order a little, the ATF automatically corrects it, which means that perfect adjustment cannot be done.
Therefore, in the F mechanism, the ATF system is forcibly operated to shift a tracking amount constantly (approx. 1/4) by setting the PATH mode with the adjusting remote controller (Ref No. J-10). So, fine tracking adjustment can be easily done.
Also, the PATH mode setting varies with the model, and therefore, refer to the Service Manual.

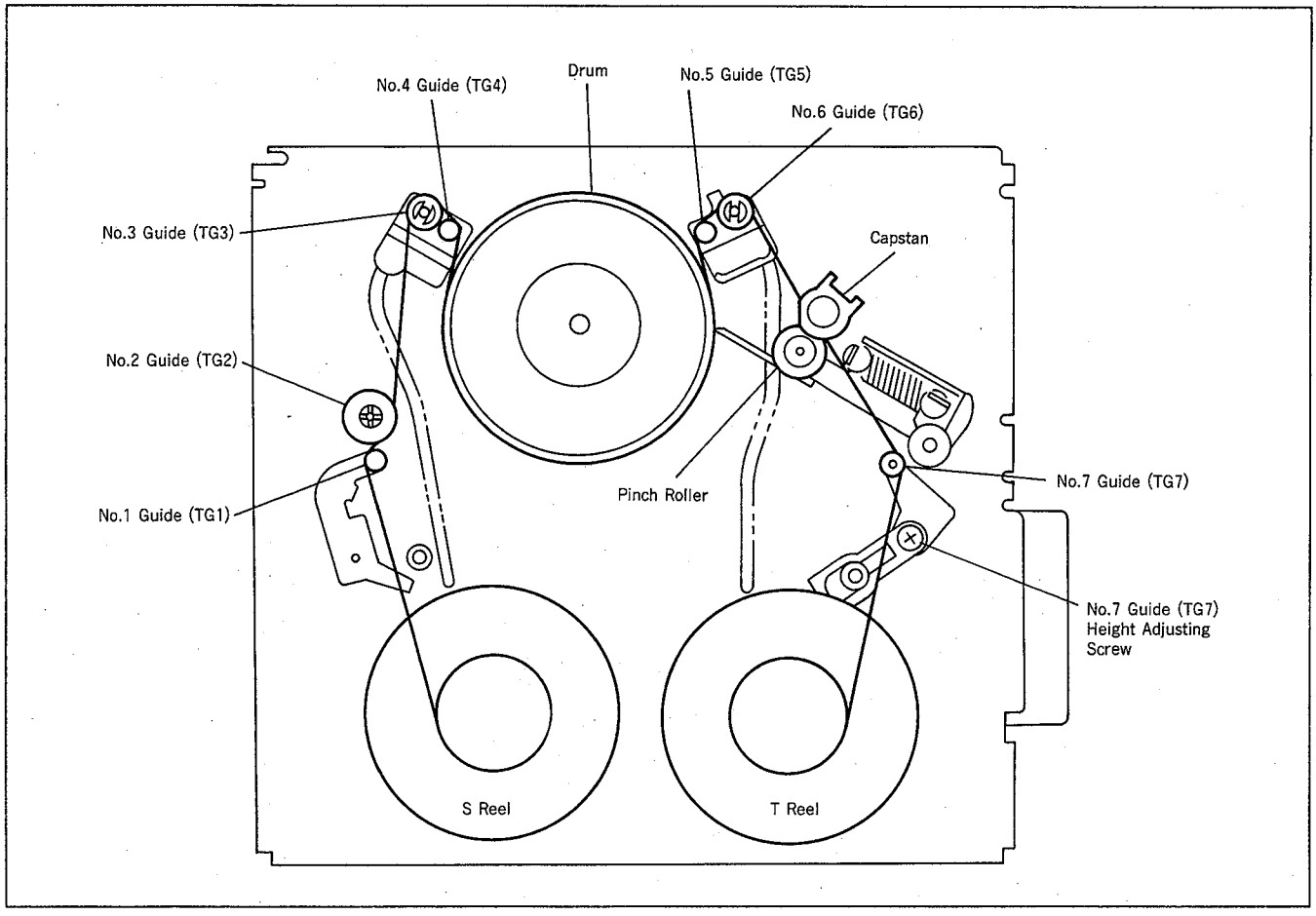

Fig. 34

[Note on Adjustment of No.7 Guide (TG7)]
The height adjustment screw for No.7 guide (TG7) is located at some distance from the guide (refer to Fig.42).
Therefore, when performing section 5-4. No.7 Guide (TG7) Adjustment it is convenient to use the alignment tape for tracking (Ref. No. J-6), modified as follows, and perform adjustment in playback mode.

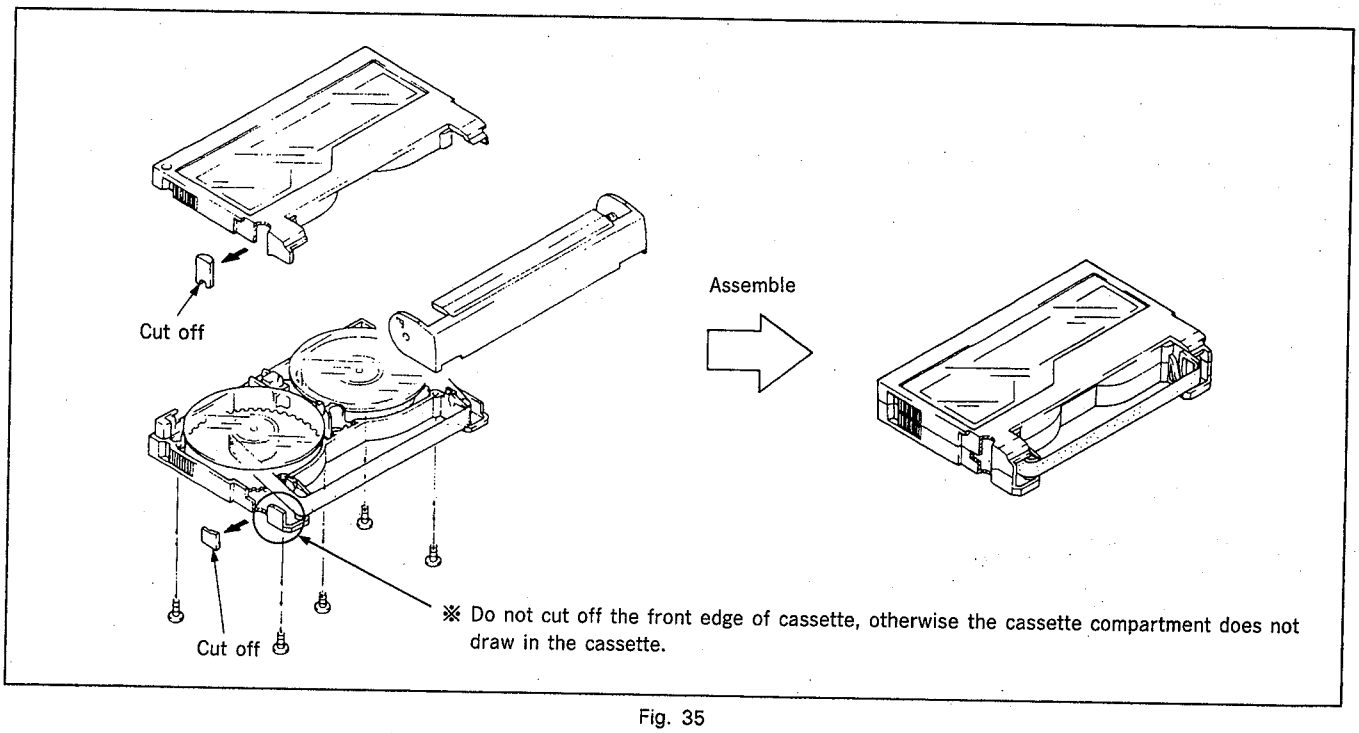

Fig. 35

5-1. PREPARATION FOR ADJUSTMENT

1) Clean the tape running surface (tape guides, drum, capstan shaft, pinch roller) (Fig. 34).
2) Set the PATH mode using the adjusting remote controller.
3) connect an oscilloscope to the check pin connector of the set.
4) Play back a tracking alignment tape (NTSC : WR5-1NP, or PAL : WR5-1CP).
5) Check that a RF waveform is flat at the inlet and outlet of the oscilloscope (Fig. 36 ⓐ).
   If not flat, make adjustment with the procedures below.
   When the RF waveform is not flat at the inlet/outlet ; See Fig. 36 ⓑ and ⓒ.

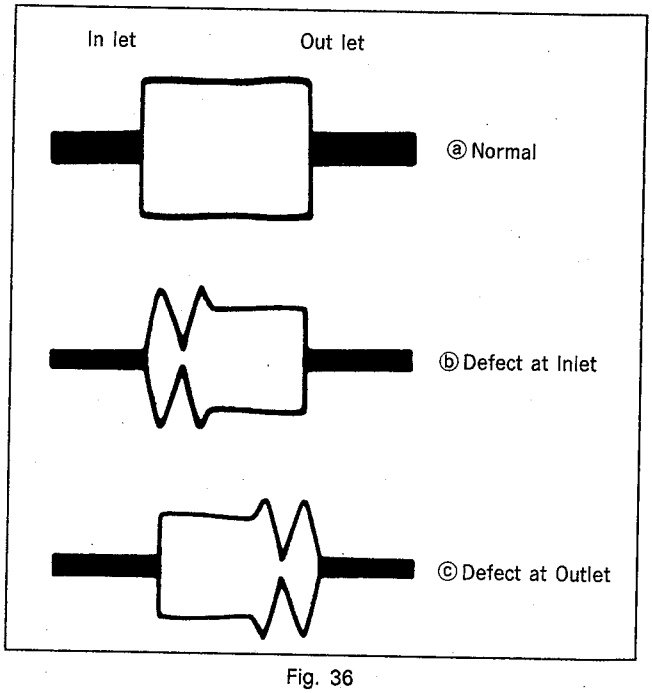

Fig. 36

5-2. TRACKING ADJUSTMENT (Fig. 37, 38)

1) Play back the tracking alignment tape.
2) Loosen the No.3 guide (TG3) lock screw ① and turn the No.3 guide to flatten the waveform at the inlet.
3) Tighten the No.3 guide (TG3) lock screw ① to lock the No.3 guide.
4) Loosen the No.6 guide (TG6) lock screw ② and turn the No.6 guide to flatten the waveform at the outlet.
5) Tighten the No.6 guide (TG6) lock screw ② to lock the No.6 guide. When this is done, make sure that the waveform does not change at the outlet.

Note : Be careful not to loosen the lock screw too much because the guide is easily moved.

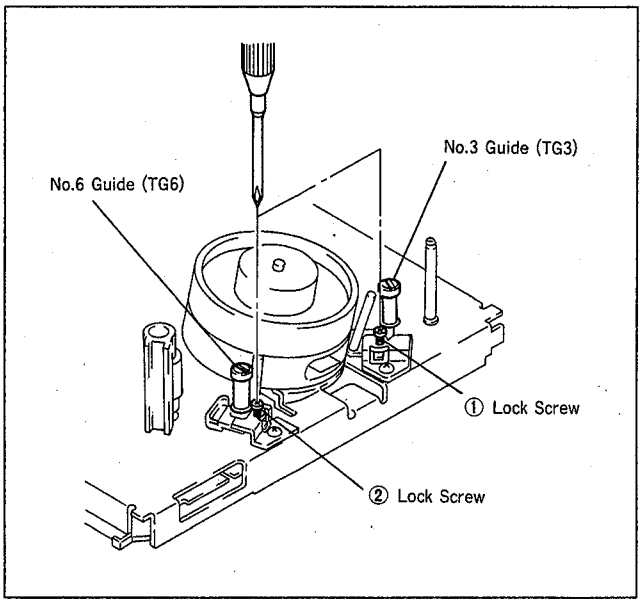

Fig. 37

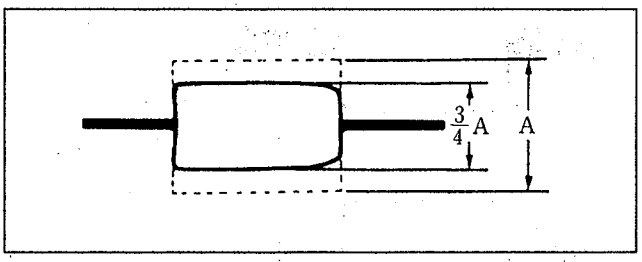

Fig. 38

5-3. No.2 GUIDE (TG2) ADJUSTMENT

When the No.2 guide has been turned or replaced, perform height presetting before this adjustment.

5-3-1. No. 2 GUIDE (TG2) HEIGHT PRESETTING (Fig. 39)

1) Rotating the TG2 upper flange, adjust the height from top surface of mechanical chassis to top surface of TG2 upper flange to 22.12mm.

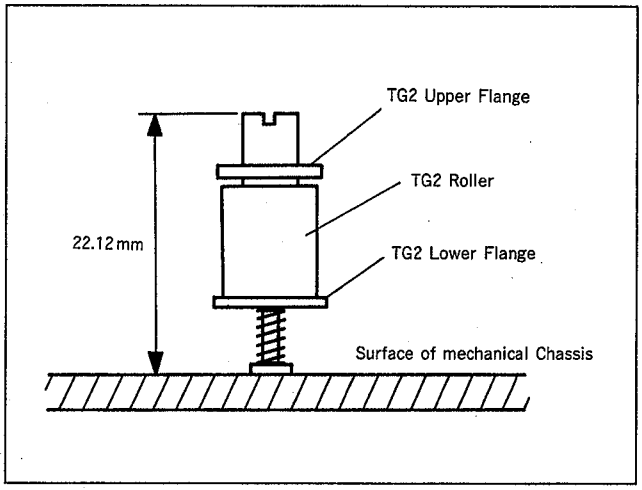

Fig. 39

[Reference]
This F mechanism is equipped with four adjustable guides (TG2, 3, 6 and 7). To raise or lower the respective guide rotate the corresponding adjustment screw as shown below.

Guide	Guide adjustment	Rotating direction of adjustment screw
TG2, 3, 6	Raise	Counterclockwise
	Lower	Clockwise
TG7	Raise	Clockwese
	Lower	Counterclockwise

5-3-2. No. 2 GUIDE (TG2) ADJUSTMENT (Fig. 40, 41)

1) Play back a thin tape like the P6-120MP, etc. and set the REV mode.
2) Confirm that the tape is not bent at the lower flange ② of the No.2 guide (TG2) ① (Fig. 40). If it is, turn the upper flange ③ of the No.2 guide (TG2) clockwise with a screwdriver, lowering it until the tape is straightened.
3) Play back the alignment tape for tracking adjustment.
4) Perform tracking adjustment and trcking fine adjustment as described in sections 5-2.
5) In the track shift mode, CUE/REV the tape, then play it back and confirm that the RF waveform rises flat within 2 seconds.
6) If the waveform is not normal (Fig. 41), turn the upper flange ③ of the No. 2 guide (TG2) ① 90° counterclockwise and repeat step 5.
   Repeat steps 5) and 6) until a normal waveform is obtained.
   Then, confirm that the tracking waveform has not changed.
   If it has, perform fine adjustment of entrance side tracking and repeat step 5).

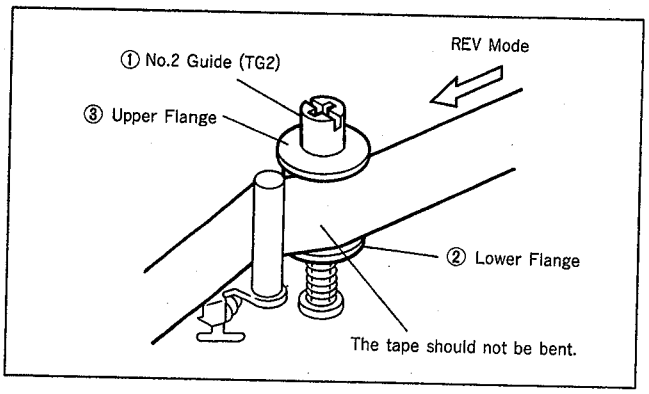

Fig. 40

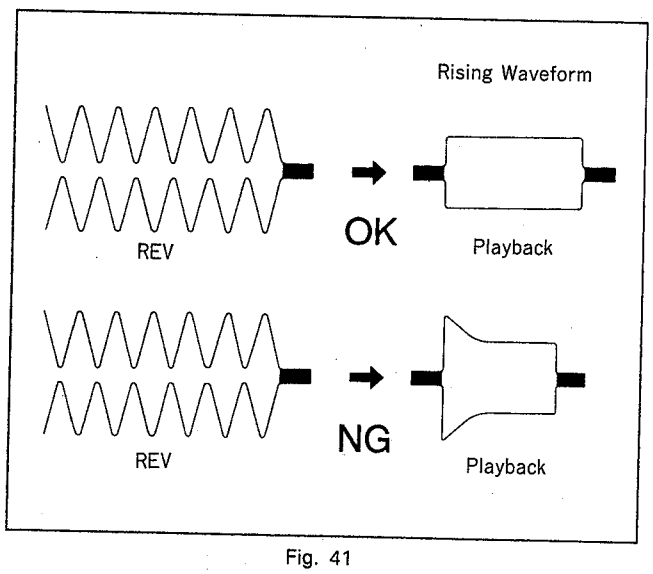

Fig. 41

5-4. No.7 GUIDE (TG7) ADJUSTMENT (Fig. 42)

Note : This adjustment requires the No. 7 guide adjusting cassetetape (Fig. 35).

1) Play back the No.7 guide adjusting cassetetape and set the REV mode.
2) Confirm that the tape is not bent between the No.6 guide (TG6) ① and the capstan ②. If it is, turn the hight adjusting screw ④of the No.7 guide (TG7) ③ until the tape is straightened.
3) Set the playback mode again and confirm that the tape is not bent between the capstan ② and the No.7 guide (TG7) ③ (specification : 0.5mm or less). If the tape is bent beyond the specification, turn the hight adjusting screw ④ until bending is within the specification (0.5mm).
   If in the REV mode tape bending between the No. 6 guide (TG6) ① and the capstan ② is 0.3mm or less, adjustment can be considered completed.

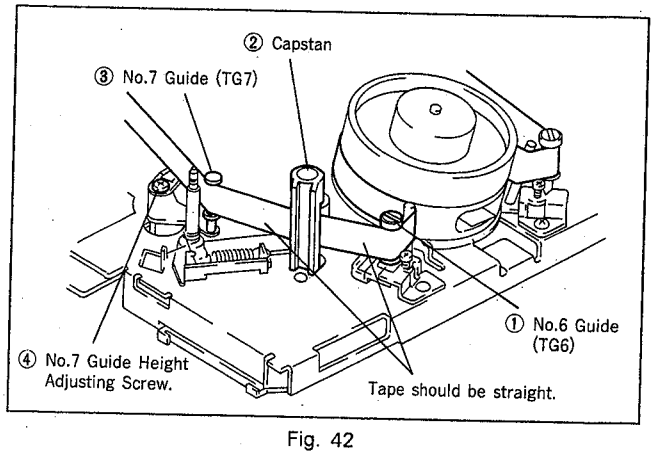

Fig. 42

5-5. CUE AND REV WAVEFORM CHECK (Fig. 43)

1) Play back the alignment tape for tracking adjustment and set the REV mode. Confirm that waveform peaks maintain a constant pitch of 5 seconds or more (Fig. 43). In case pitch is not constant, perform section 5-2.Tracking Fine Adjustment and section 5-4. No.7 Guide Adjustment.
2) Set the CUE mode. Confirm that waveform peaks still maintain a constant pitch of 5 seconds or more (Fig. 43).
   Otherwise, perform section 5-2 Tracking Fine Adjustment.

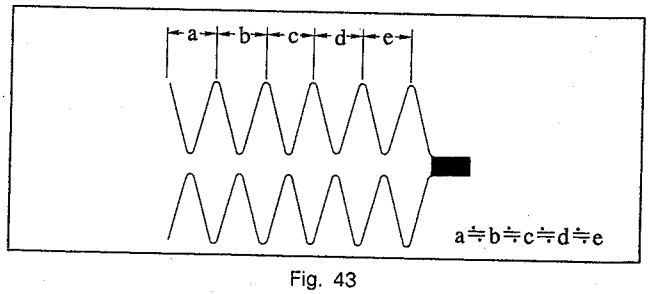

Fig. 43

5-6. CHECK AFTER ADJUSTMENT

5-6-1. TRACKING CHECK

1) Confirm that the amplitude of RF waveform is reduced to approx. 3/4 when the track shift mode is set (Fig. 44).
2) Then, confirm that the minimum amplitude value (EMIN) is 65% of the maximum value (EMAX) or larger (Fig. 45).
3) Confirm that no large fluctuations occur on the waveform (Fig. 45).

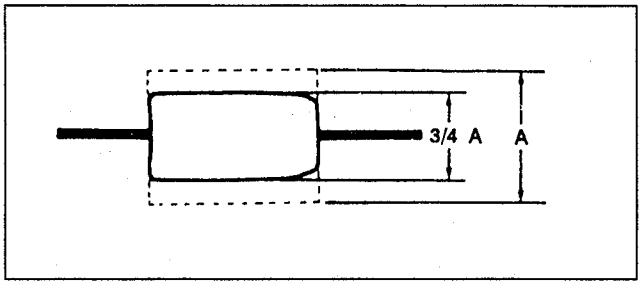

Fig. 44

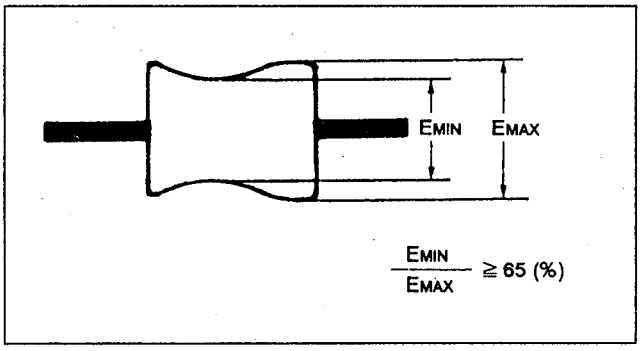

Fig. 45

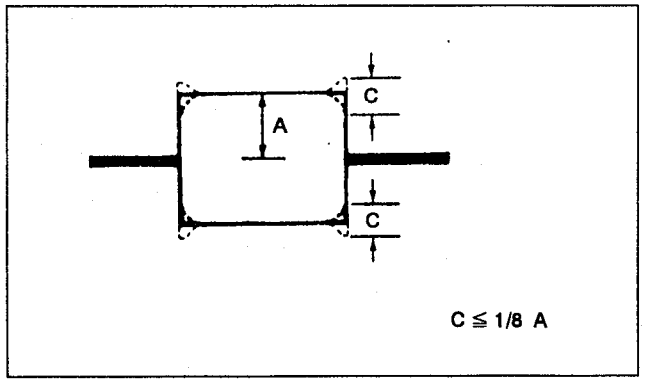

Fig. 46

5-6-2. RISING CHECK (Fig. 47)

1) Play back the alignment tape for tracking adjustment.
2) Cancel the track shift mode.
3) Eject the tape, then load it again.
4) Set the playback mode and confirm that the RF wave form rises flat within 2 seconds. Also confirm that the tape is not bent around the pinch roller.
5) CUE/REV and FF/REW the tape, then play it back and confirm that the RF waveform rises flat within 2 seconds, Also confirm that the tape is not bent around the pinch roller.
6) Repeat steps 3) to 5) once more.

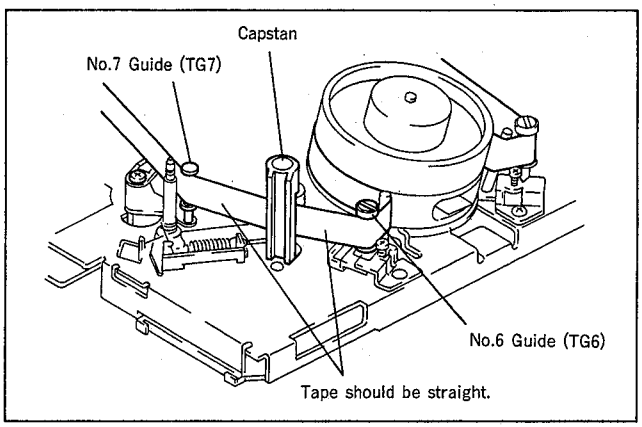

Fig. 47

5-6-3. TAPE PATH CHECK (Fig. 48)

1) Play back a thin tape like the P6-120MP (NTSC) or P5-90MP (PAL), etc. and confirm that no tape rising occurs, and that curling is less than 0.3mm, at the lower flange of the No. 2 guide , the upper flange of the No.3 guide, the upper flange of the No. 6 guide and the No.7 guide upper and lower flanges.
2) Confirm that no tape rising occurs and that curling is less than 0.3mm at the flange of all guide when pressing the FF button in the playback mode to set the CUE mode, or the REW button to set the REV mode.

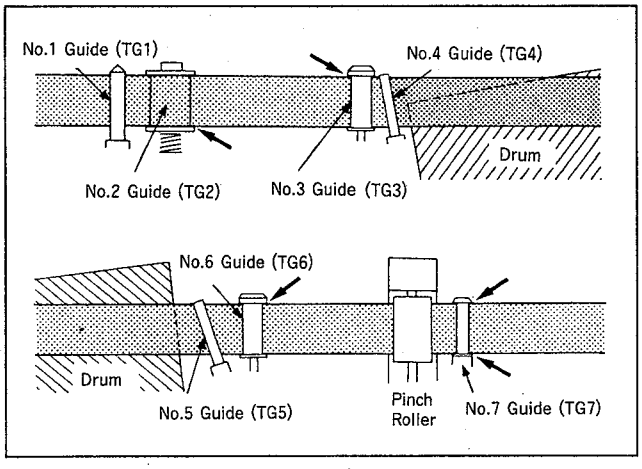

Fig. 48

SECTION 6
EXPLODED VIEWS

NOTE:
- Items marked "*" are not stocked since they are seldom required for routine service. Some delay should be anticipated when ordering these items.
- The mechanical parts with no reference number in the exploded views are not supplied.
- Hardware (#mark) list is given in the last of this parts list.

The components identified by mark ⚠ or dotted line with mark ⚠ are critical for safety. Replace only with part number specified.

6-1. FRONT LOADING ASSEMBLY

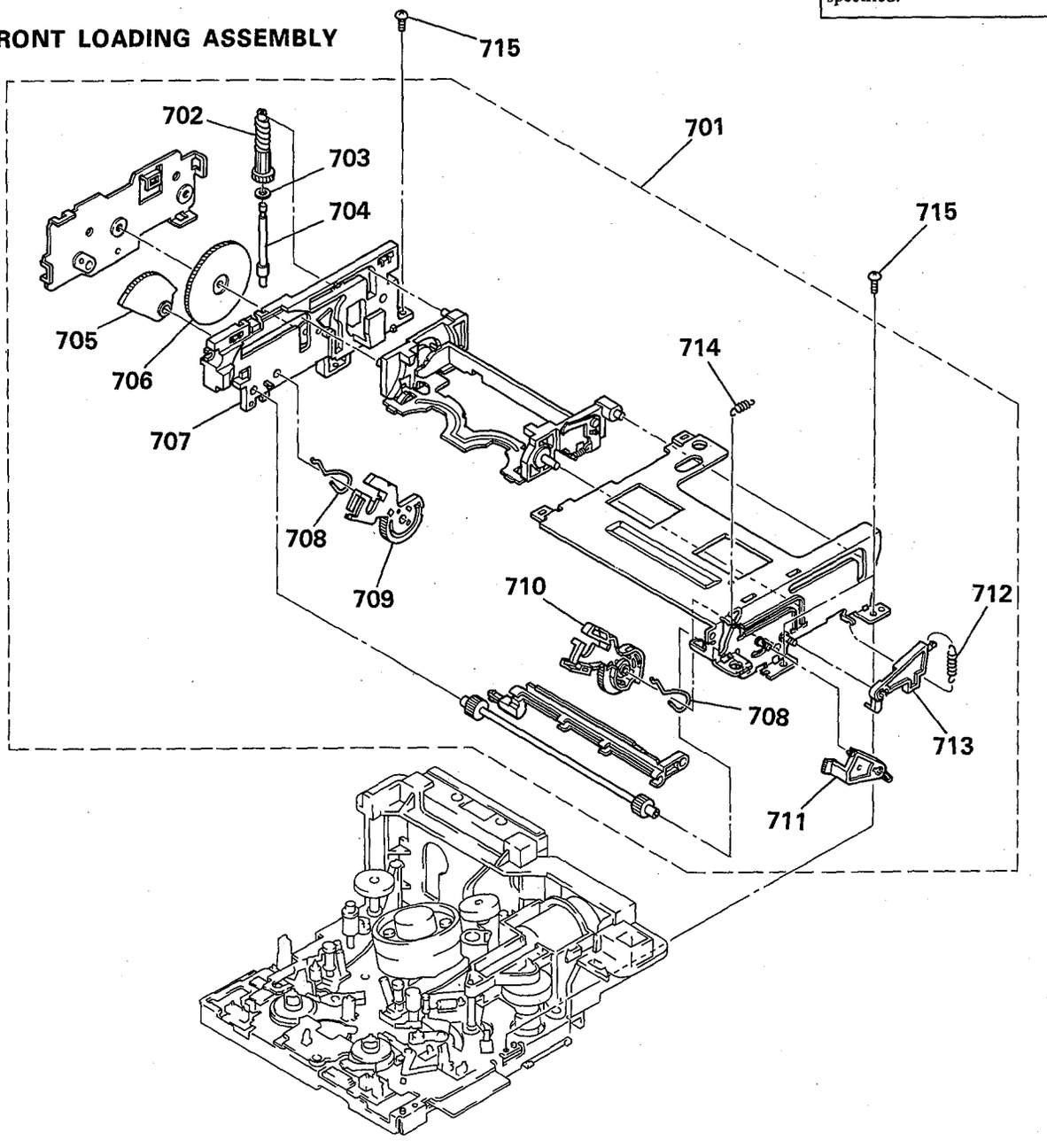

Ref.No.	Part No.	Description	Remark
701	A-7091-941-A	FL BLOCK ASSY	
702	3-954-028-01	GEAR, FL WORM	
703	3-738-212-11	RETAINER, THRUST, REEL TABLE	
*704	3-954-029-01	SHAFT, FL WORM GEAR	
705	3-954-020-01	GEAR, DRIVING	
706	3-954-019-01	WHEEL, FL WORM	
*707	3-954-032-01	PLATE (S), SIDE	
708	3-954-042-01	SPRING, PRESS	

Ref.No.	Part No.	Description	Remark
709	3-954-034-01	ARM (S), DRIVING	
710	3-954-033-01	ARM (T), DRIVING	
*711	3-954-041-01	ARM, DOOR SWITCHING	
712	3-954-043-01	SPRING, TENSION	
*713	3-954-040-01	ARM, CASSETTE IN SWICH	
714	3-954-044-01	SPRING, TENSION	
715	3-732-817-01	SCREW (2X4.5), TAPPING	

6-2. MD CHASSIS ASSEMBLY (1)

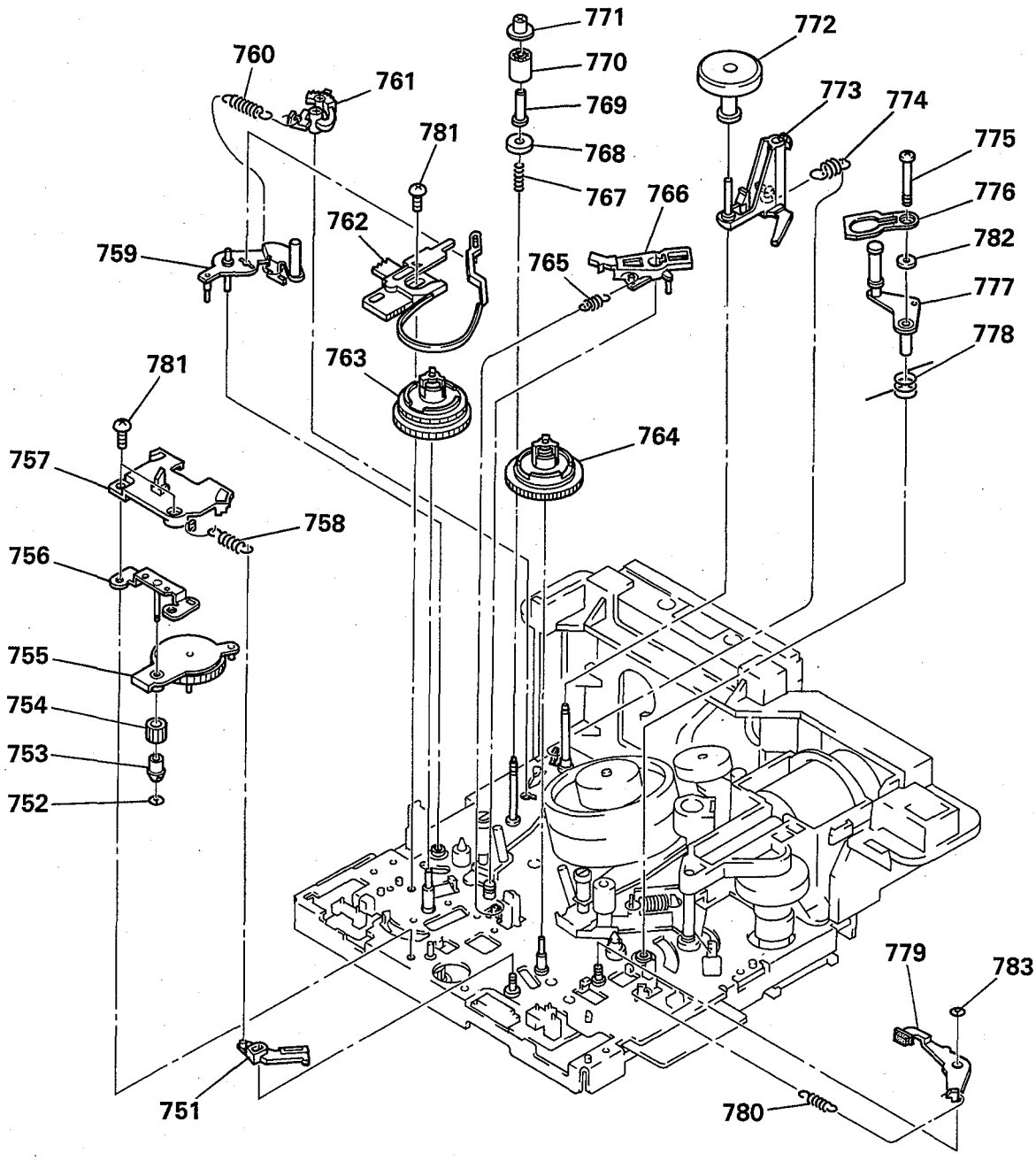

Ref.No.	Part No.	Description	Remark
751	X-3943-111-1	BRAKE (T) ASSY, SOFT	
752	3-726-829-01	WASHER, STOPPER	
753	3-954-321-01	BEARING, PENDULUM DRIVING	
754	3-954-059-01	GEAR, PENDULUM DRIVING	
755	X-3942-951-1	GEAR ASSY, PENDULUM	
756	X-3943-162-1	BASE ASSY, PENDULUM	
*757	3-954-063-01	PLATE, RELEASE, REEL LOCK	
758	3-955-142-01	SPRING, TENSION	
759	X-3942-955-1	TENSION REGULATOR ASSY	
760	3-954-074-01	SPRING, TENSION	
761	3-954-103-01	ARM, TENSION ADJUSTMENT	
762	X-3942-956-1	BAND ASSY, TENSION REGULATOR	
763	X-3942-954-1	TABLE (S) ASSY, REEL	
764	X-3942-953-1	TABLE (T) ASSY, REEL	
765	3-954-085-01	SPRING, TENSION	
766	3-954-071-01	ARM, BRAKE (S)	
767	3-954-001-01	SPRING, COMPRESSION	

Ref.No.	Part No.	Description	Remark
768	3-726-882-02	FLANGE, LOWER, TG2	
769	3-726-885-01	SLEEVE, TG2	
770	3-726-883-31	ROLLER, TG2	
771	3-726-884-01	FLANGE, UPPER, TG2	
772	3-954-282-01	ROLLER (M)	
773	X-3943-015-1	BASE ASSY, ROLLER	
774	3-954-284-01	SPRING, TENSION	
775	3-954-096-01	SCREW, TG7 HEIGHT ADJUSTMENT	
776	3-954-093-01	SPACER, TG7	
777	X-3942-958-1	ARM ASSY, TG7	
778	3-954-003-01	SPRING (TG7), TORSION	
779	X-3943-161-1	BRAKE (T) ASSY	
780	3-953-978-01	SPRING, TENSION	
781	3-732-817-01	SCREW (2X4.5), TAPPING	
782	3-738-212-11	RETAINER, THRUST, REEL TABLE	
783	3-669-465-00	WASHER (1.5), STOPPER	

6-3. MD CHASSIS ASSEMBLY (2)

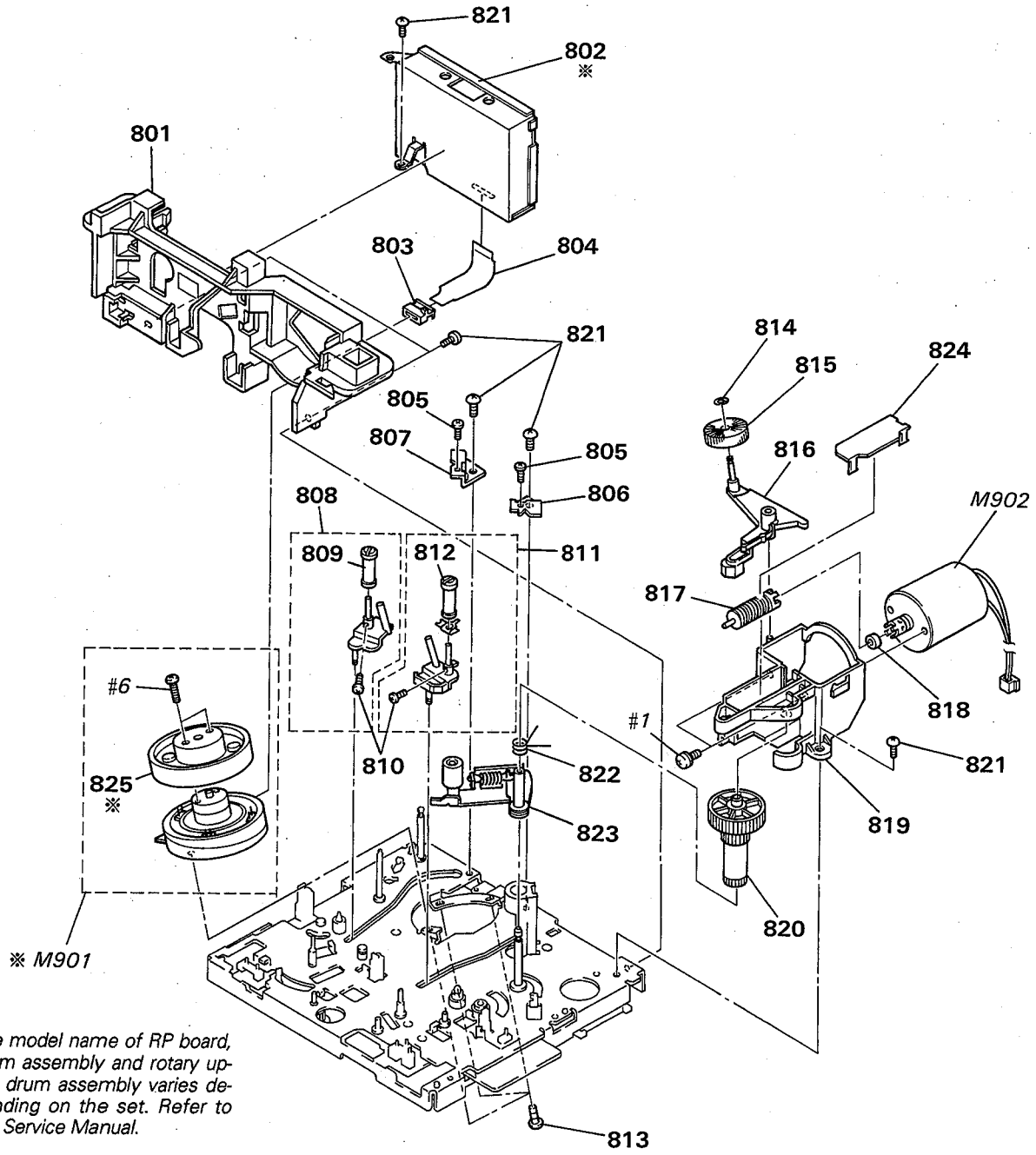

※ *The model name of RP board, drum assembly and rotary upper drum assembly varies depending on the set. Refer to the Service Manual.*

Ref.No.	Part No.	Description	Remark
*801	3-955-623-01	FRAME, RP	
*802	※	RP BOARD, COMPLETE	
803	1-691-471-11	CONNECTOR, TRANSLATION 11P	
804	1-649-565-11	FP-696 FLEXIBLE BOARD	
805	3-954-285-01	SCREW (M1.4X0.2)	
806	3-954-091-01	CATCHER (T)	
807	3-954-090-01	CATCHER (S)	
808	A-7040-338-A	COASTER (S) BLOCK ASSY	
809	X-3941-755-1	ROLLER ASSY (2), TG3	
810	3-947-504-01	SCREW (M1.2X2)	
811	A-7040-339-A	COASTER (T) BLOCK ASSY	
812	X-3941-756-1	ROLLER ASSY (2), TG6	
813	3-686-493-01	SCREW (M2X5), P1	
814	3-321-393-01	WASHER, STOPPER	

Ref.No.	Part No.	Description	Remark
815	X-3943-192-1	ROLLER ASSY, HC	
816	X-3942-947-1	ARM ASSY, HC	
817	3-733-395-01	GEAR (CAM), WORM	
818	3-696-388-01	RUBBER, JOINT	
819	3-954-024-01	HOLDER, MOTOR	
820	3-954-023-01	WHEEL, CAM WORM	
821	3-732-817-01	SCREW (2X4.5), TAPPING	
822	3-954-105-01	SPRING (PINCH DRIVING)	
823	X-3942-945-1	ARM ASSY, PINCH	
824	3-958-047-02	MOTOR HOLDER COVER	
825	※	DRUM, UPPER, ROTARY	
M901	※	DRUM ASSY	
M902	X-3942-946-1	MOTOR ASSY, CAM	

6-4. MD CHASSIS ASSEMBLY (3)

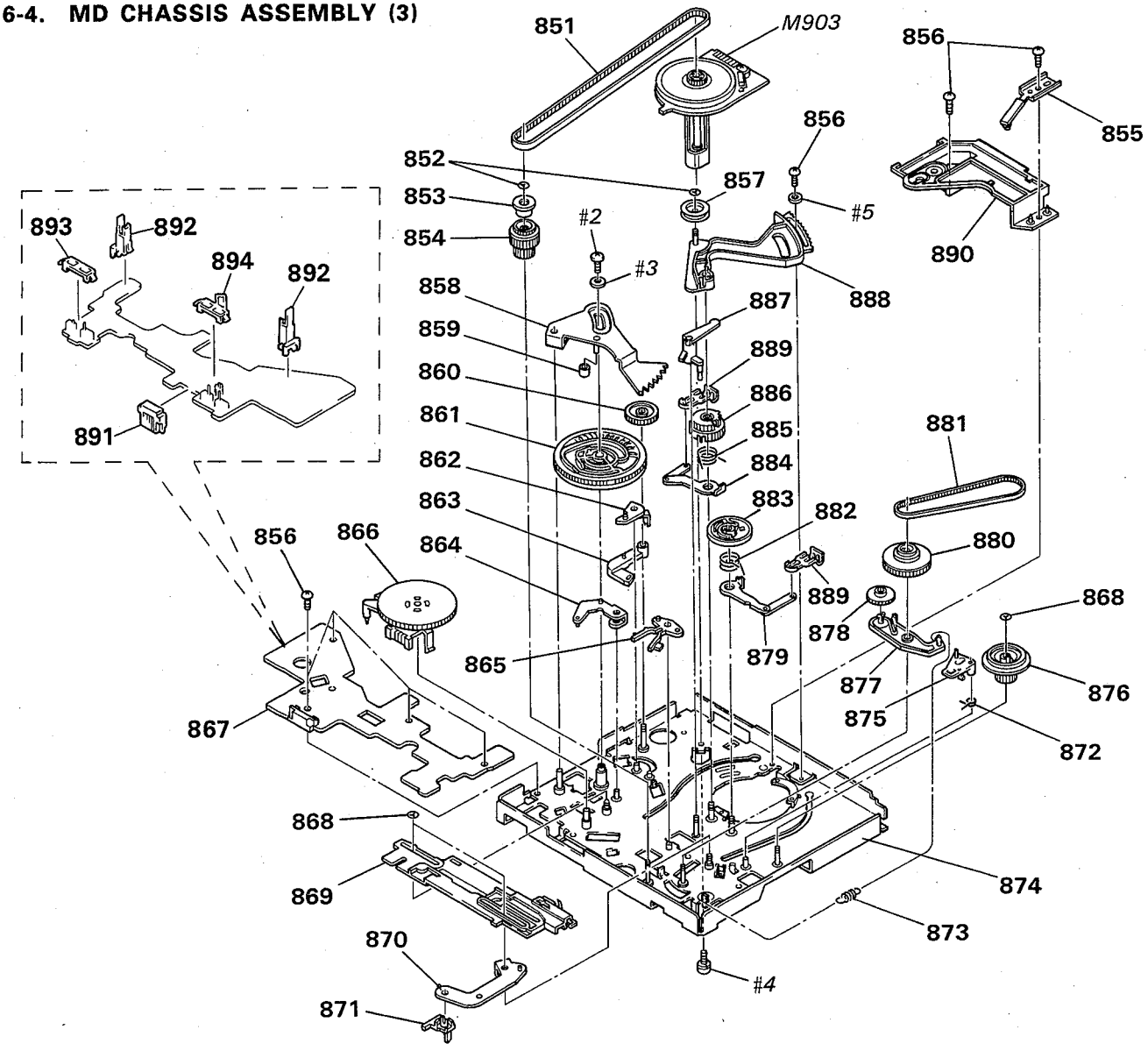

Ref.No.	Part No.	Description	Remark
851	3-953-986-01	BELT, TIMING	
852	3-726-829-01	WASHER, STOPPER	
853	3-954-102-02	FLANGE, REEL RELAY	
854	3-954-061-01	GEAR, REEL RELAY	
855	X-3942-960-1	GROUND ASSY, SHAFT	
856	3-732-817-01	SCREW (2X4.5), TAPPING	
857	X-3943-016-1	PULLEY ASSY, BELT	
*858	3-954-014-01	LEVER, LOADING DRIVING	
859	3-954-323-01	ROLLER, LOADING	
860	3-954-015-01	GEAR, CAM RELAY	
861	3-954-050-01	CAM, MAIN	
*862	3-954-009-01	LEVER, PINCH DRIVING	
863	3-954-016-01	LEVER, TG7 DRIVING	
*864	3-954-007-01	LEVER, SLIDE PLATE DRIVING	
865	3-953-973-01	ARM, PENDULUM COMPULSION	
866	1-692-498-11	SWITCH, ROTARY	
*867	1-648-300-11	MD-59 BOARD	
868	3-669-465-00	WASHER (1.5), STOPPER	
869	3-953-972-01	PLATE, SLIDE	
*870	3-953-974-01	ARM, S TAKE-UP	
871	3-953-975-01	CLAW, S TAKE-UP	
872	3-956-366-01	SPRING, TORSION	
873	3-953-982-01	SPRING, TENSION	

Ref.No.	Part No.	Description	Remark
*874	X-3942-952-1	CHASSIS ASSY, MECHANICAL	
875	3-954-100-01	ARM, TENSION REGULATOR SUB	
876	3-953-983-01	GEAR, FL PULLEY	
877	3-953-979-01	ARM, FL SELECTION	
878	3-953-980-01	GEAR, FL SELECTION	
879	X-3942-949-1	ARM (S) ASSY, LOADING	
880	3-953-981-01	GEAR (DRIVING), FL PULLEY	
881	3-954-079-01	BELT (FL), TIMING	
882	3-953-998-01	SPRING (S), TORSION	
883	3-953-991-01	GEAR (S), LOADING	
884	X-3942-948-1	ARM (T) ASSY, LOADING	
885	3-954-000-01	SPRING (T), TORSION	
886	3-953-992-01	GEAR (T), LOADING	
887	3-954-072-01	LEVER, BRAKE (S) DRIVING	
888	X-3942-962-1	BASE ASSY, PULLEY	
889	3-956-649-01	SPRING, LEAF, COASTER	
*890	3-954-049-01	RETAINER, WORM WHEET	
891	1-750-620-11	CONNECTOR (MM8 MD)	
892	3-953-985-01	HOLDER, ST SENSOR	
893	3-954-638-01	HOLDER (S), PUSH SWITCH	
894	3-954-639-01	HOLDER (T), PUSH SWITCH	
M903	8-835-499-01	MOTOR, DC SCE-0501A	

SCHEMATIC DIAGRAM

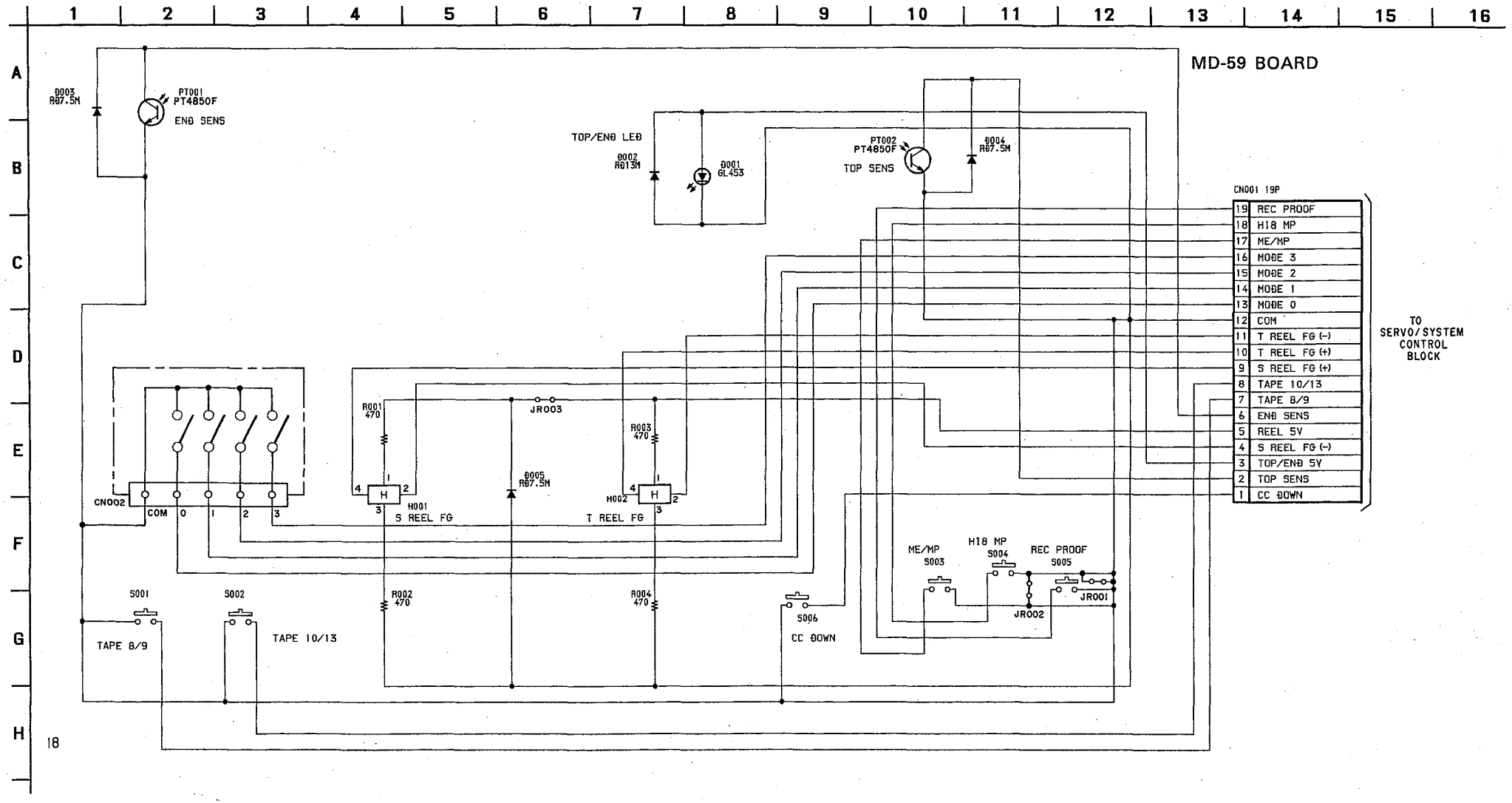

PRINTED WIRING BOARD

MD-59 BOARD

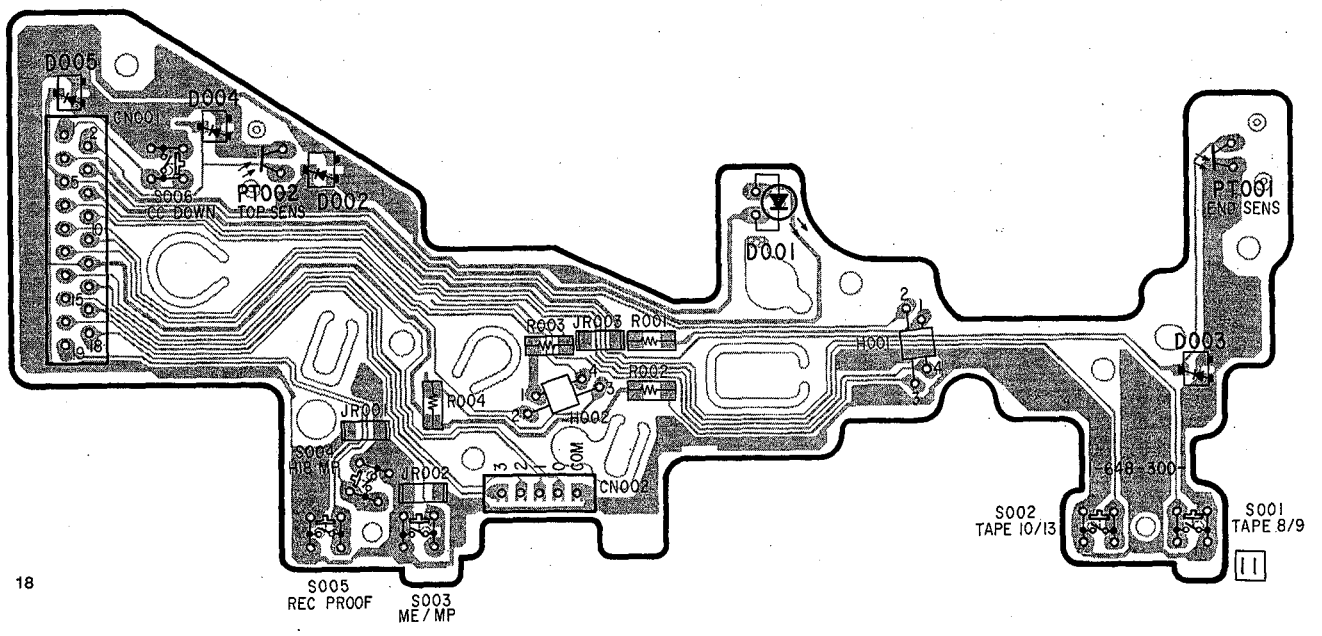

SECTION 8
ELECTRICAL PARTS LIST

MD-59

NOTE:
- Due to standardization, replacements in the parts list may be different from the parts specified in the diagrams or the components used on the set.
- -XX and -X mean standardized parts, so they may have some difference from the original one.
- RESISTORS
  All resistors are in ohms.
  METAL: Metal-film resistor.
  METAL OXIDE: Metal oxide-film resistor.
  F: nonflammable
- Items marked "*" are not stocked since they are seldom required for routine service. Some delay should be anticipated when ordering these items.
- SEMICONDUCTORS
  In each case, u : μ, for example:
  uA··· : μA···, uPA··· : μPA···,
  uPB··· : μPB···, uPC··· : μPC···, uPD··· : μPD···
- CAPACITORS
  uF : μF
- COILS
  uH : μH

When indicating parts by reference number, please include the board.

Ref.No.	Part No.	Description	Remark
*	1-648-300-11	MD-59 BOARD **********	
	3-953-985-01	HOLDER, ST SENSOR	
	3-954-638-01	HOLDER (S), PUSH SWITCH	
	3-954-639-01	HOLDER (T), PUSH SWITCH	
		< CONNECTOR >	
CN001	1-569-341-11	CONNECTOR, BOARD TO BOARD 19P	
*CN002	1-750-620-11	CONNECTOR (MM8 MD)	
		< DIODE >	
D001	8-719-988-42	DIODE GL453S	
D002	8-719-106-79	DIODE RD13M-B1	
D003	8-719-106-23	DIODE RD7.5M-B2	
D004	8-719-106-23	DIODE RD7.5M-B2	
D005	8-719-106-23	DIODE RD7.5M-B2	
		< HOLE ELEMENT >	
H001	1-808-118-11	ELEMENT, HALL HW-300A	
H002	1-808-118-11	ELEMENT, HALL HW/300A	
		< JUMPER RESISTOR >	
JR001	1-216-296-00	METAL CHIP 0 5% 1/8W	
JR002	1-216-296-00	METAL CHIP 0 5% 1/8W	
JR003	1-216-296-00	METAL CHIP 0 5% 1/8W	
		< TRANSFORMER >	
PT001	8-729-907-25	TRANSISTOR PT4850F	
PT002	8-729-907-25	TRANSISTOR PT4850F	
		< RESISTOR >	
R001	1-216-190-00	METAL GLAZE 470 5% 1/8W	
R002	1-216-190-00	METAL GLAZE 470 5% 1/8W	
R003	1-216-190-00	METAL GLAZE 470 5% 1/8W	
R004	1-216-190-00	METAL GLAZE 470 5% 1/8W	
		< SWITCH >	
S001	1-692-497-11	SWICH, PUSH (TAPE 8/9)	
S002	1-692-497-11	SWICH, PUSH (TAPE 10/13)	
S003	1-692-497-11	SWICH, PUSH (ME/MP)	
S004	1-692-497-11	SWICH, PUSH (HI8 MP)	
S005	1-692-497-11	SWICH, PUSH (REC PROOF)	
S006	1-570-953-11	SWITCH, PUSH (1 KEY) (CC DOWN)	
**********			
		MISCELLANEOUS **********	
803	1-691-471-11	CONNECTOR, TRANSLATION 11P	
804	1-649-565-11	FP-696 FLEXIBLE BOARD	
825	※	DRUM ASSY	
866	1-692-498-11	SWITCH, ROTARY	
891	1-750-620-11	CONNECTOR (MM8 MD)	
M901	※	DRUM ASSY	
M902	X-3942-946-1	MOTOR ASSY, CAM	
M903	8-835-499-01	MOTOR, DC SCE-0501A	
**********			
		********** HARDWARE LIST **********	
#1	7-682-645-01	SCREW +PS 3X4	
#2	7-621-772-08	SCREW +B 2X3	
#3	7-688-003-01	W 3, SMALL	
#4	7-628-253-15	SCREW +PS 2X5	
#5	7-688-001-01	W 2, MIDDLE	
#6	7-627-853-57	PRECISION SCREW +P 2X5 TYPE3	

8 mm Video MECHANICAL ADJUSTMENT MANUAL V

F MECHANISM

CORRECTION-1

Correct your MECHANICAL ADJUSTMENT MANUAL V as shown below.

Subject:

1. Change of Mounting and Removal of FL Worm Wheel
2. Change of Disassembly Figure, Parts

4-26. FL WORM WHEEL (Fig. 33)(Page 33)

1. Removal

1) Disengage tabs Ⓐ at four places and remove the gear cover ①.
2) Remove the FL worm wheel ②.

2. Mounting

1) Mount the FL worm wheel ②.
2) Meeting the hole Ⓓ in drive gear with the hole in side plate, mount the FL worm wheel ② while meeting the hole Ⓒ in FL worm wheel with the hole in side plate.
3) Mount the gear cover ①.

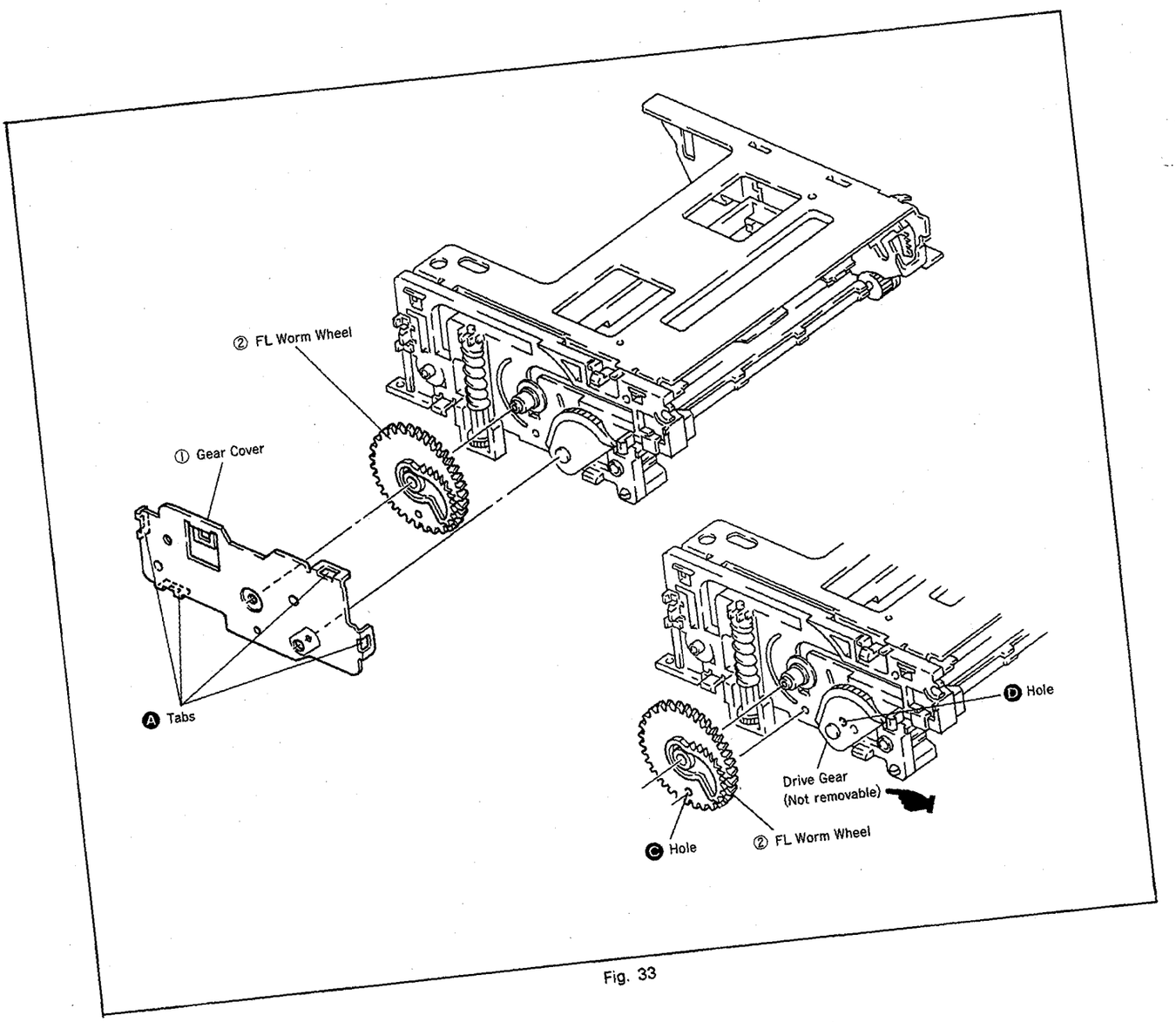

Fig. 33

☛ : Indicates Corrected portion

6-1. FRONT LOADING ASSEMBLY (Page 39)

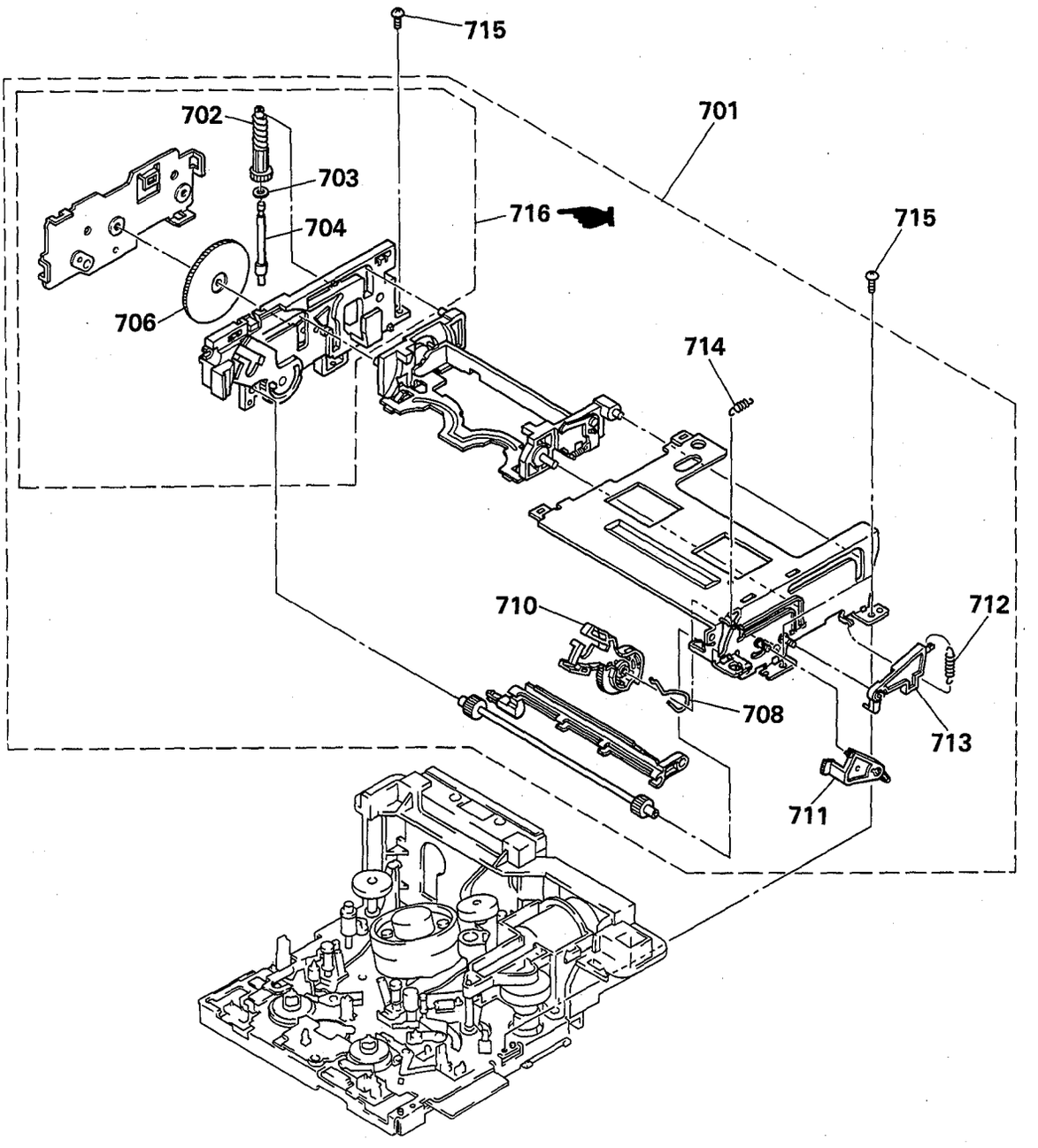

Ref. No.	Part No.	Description	Remark
701	A-7091-941-A	FL BLOCK ASSY	
702	3-954-028-01	GEAR, FL WORM	
703	3-738-212-11	RETAINER, THRUST, REEL TABLE	
* 704	3-954-029-01	SHAFT, FL WORM GEAR	
706	3-954-019-01	WHEEL, FL WORM	
708	3-954-042-01	SPRING, PRESS	

Ref. No.	Part No.	Description	Remark
710	3-954-033-01	ARM (T), DRIVING	
* 711	3-954-041-01	ARM, DOOR SWITCHING	
712	3-954-043-01	SPRING, TENSION	
* 713	3-954-040-01	ARM, CASSETE IN SWICH	
714	3-954-044-01	SPRING, TENSION	
715	3-732-817-01	SCREW (2X4.5), TAPPING	
716	A-7091-942-A	PLATE (S), SIDE ASSY ☛	

6-2. MD CHASSIS ASSEMBLY (1) (Page 40)

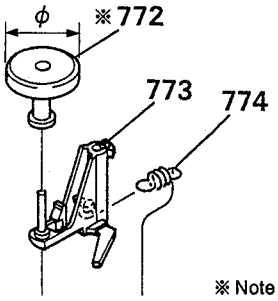

※ Note that there are two kinds of impedance roller (M) weights whose diameters are as follows.
NTSC model : ϕ 19
PAL model : ϕ 10

Ref.No.	Part No.	Description	Remark
768	3-726-882-02	FLANGE, LOWER, TG2	
769	3-726-885-01	SLEEVE, TG2	
770	3-726-883-31	ROLLER, TG2	
771	3-726-884-01	FLANGE, UPPER, TG2	
772	3-954-282-01	ROLLER (M NTSC), IMPEDANCE	
772	3-962-051-01	ROLLER (M PAL), IMPEDANCE	ADD
773	X-3943-015-1	BASE ASSY, ROLLER	
774	3-954-284-01	SPRING, TENSION	
775	3-954-096-01	SCREW, TG7 HEIGHT ADJUSTMENT	
776	3-954-093-01	SPACER, TG7	
777	X-3942-958-1	ARM ASSY, TG7	
778	3-954-003-01	SPRING (TG7), TORSION	
779	X-3943-161-1	BRAKE (T) ASSY	
780	3-953-978-01	SPRING, TENSION	
781	3-732-817-01	SCREW (2X4.5), TAPPING	
782	3-738-212-11	RETAINER, THRUST, REEL TABLE	
783	3-669-465-00	WASHER (1.5), STOPPER	

6-3. MD CHASSIS ASSEMBLY (2) (Page 41)

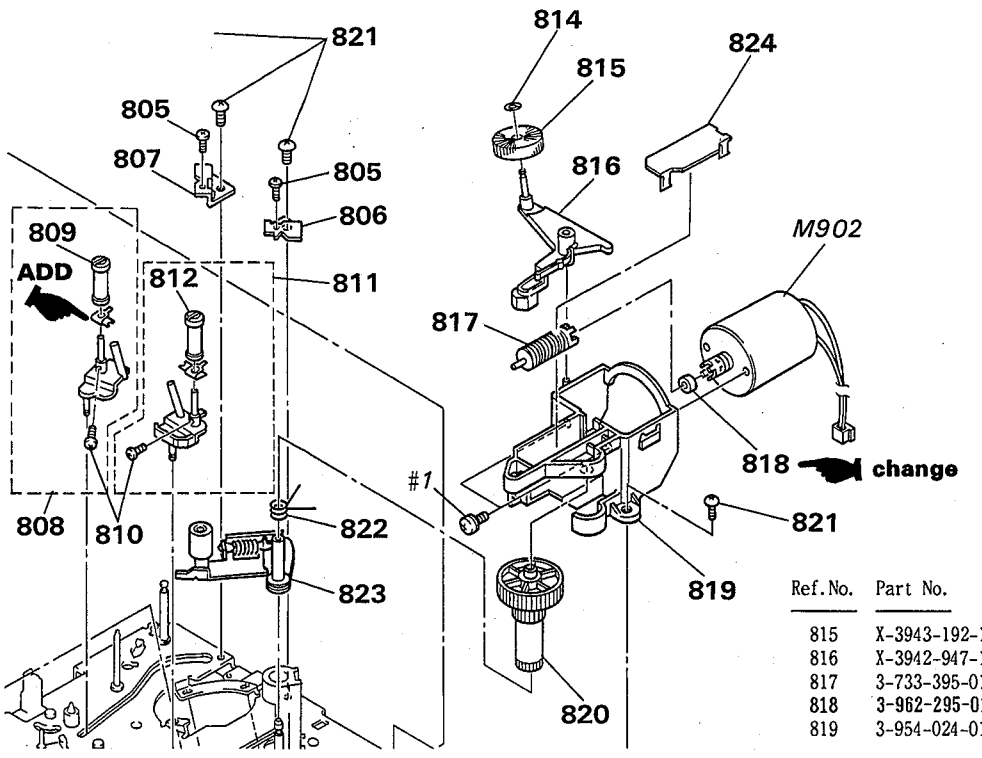

Ref.No.	Part No.	Description	Remark
815	X-3943-192-1	ROLLER ASSY, HC	
816	X-3942-947-1	ARM ASSY, HC	
817	3-733-395-01	GEAR (CAM), WORM	
818	3-962-295-01	RUBBER, JOINT	
819	3-954-024-01	HOLDER, MOTOR	
820	3-954-023-01	WHEEL, CAM WORM	
821	3-732-817-01	SCREW (2X4.5), TAPPING	
822	3-954-105-01	SPRING (PINCH DRIVING)	
823	X-3942-945-1	ARM ASSY, PINCH	
824	3-958-047-02	MOTOR HOLDER COVER	
825	※	DRUM, UPPER, ROTARY	
M901	※	DRUM ASSY	
M902	X-3942-946-1	MOTOR ASSY, CAM	

Sony Corporation
Consumer A&V Products Company
Home A&V Products Div.

English
94J18113-1

9-973-445-92

©1994.10

Published by Personal A&V Products Div. Quality Engineering Dept.

8mm Video MECHANICAL ADJUSTMENT MANUAL Ⅴ

F MECHANISM

video 8

CORRECTION-2

Please correct your 8mm Video MECHANICAL ADJUSTMENT MANUAL Ⅴ.

Subject : 5-2. TRACKING ADJUSTMENT

(97-005)

Page 36

Incorrect

5-2. TRACKING ADJUSTMENT (Fig. 37, 38)

1) Play back the tracking alignment tape.
2) Loosen the No. 3 guide (TG3) lock screw ① and turn the No. 3 guide to flatten the waveform at the inlet.
3) Tighten the No. 3 guide (TG3) lock screw ① to lock the No. 3 guide.
4) Loosen the No. 6 guide (TG6) lock screw ② and turn the No. 6 guide to flatten the waveform at the outlet.
5) Tighten the No. 6 guide (TG6) lock screw ② to lock the No. 6 guide. When this is done, make sure that the waveform does not change at the outlet.

Note : Be careful not to loosen the lock screw too much because the guide is easily moved.

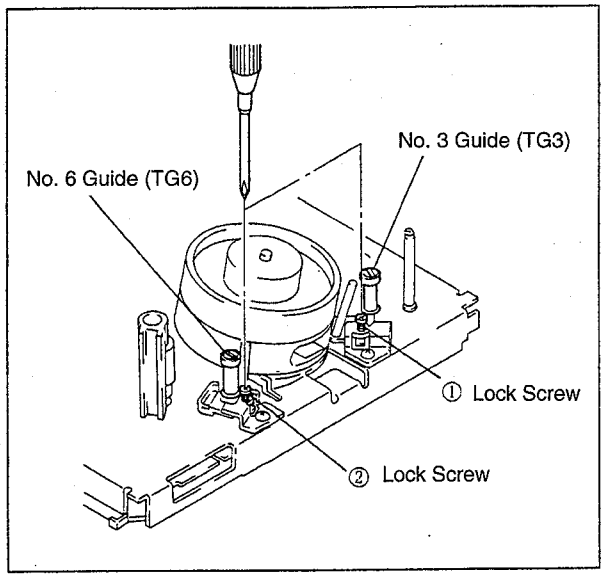

Fig. 37

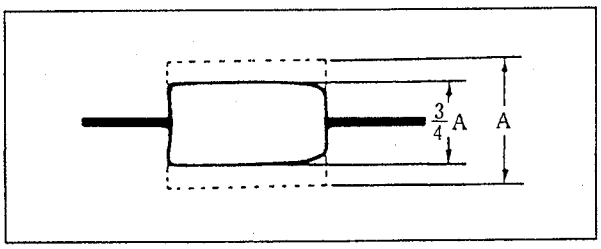

Fig. 38

Correct

5-2. TRACKING ADJUSTMENT (Fig. 37, 38)

1) Play back the tracking alignment tape.
2) Turn the No. 3 guide to flatten the waveform at the inlet.
3) Turn the No. 6 guide to flatten the waveform at the outlet.

Note : Be careful not to touch the lock screw.

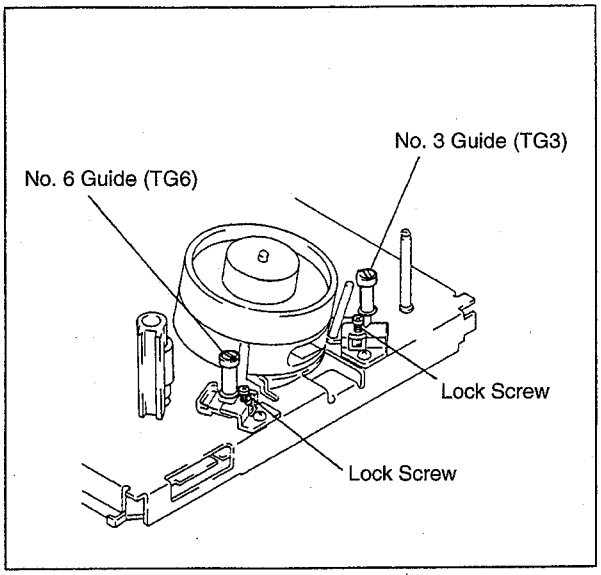

Fig. 37

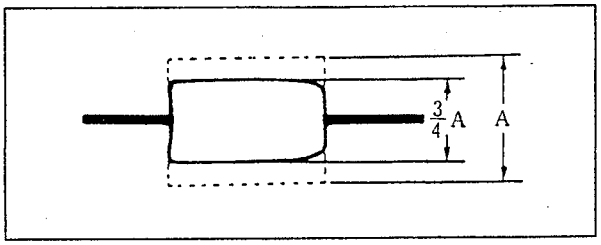

Fig. 38